Air Conditioners

Technical Data

VRV®III heat recovery, with connection to heating only hydrobox

EEDEN11-200

REYAQ-P

DAIKIN

Air Conditioners

Technical Data

VRV®

VRV®III heat recovery, with connection to heating only hydrobox

EEDEN11-200

REYAQ-P

TABLE OF CONTENTS

REYAQ-P

1 Features 2

2 Specifications 3
Technical Specifications 3
Electrical Specifications 5

3 Selection procedure 6
Selection Procedure 6

4 Combination table 7
Combination Table 7

5 Capacity tables 8
Cooling Capacity Tables 8
Heating Capacity Tables 16
Capacity Correction Factor 24

6 Dimensional drawings 28
Dimensional Drawings 28

7 Centre of gravity 29
Centre of Gravity 29

8 Piping diagrams 30
Piping Diagrams 30

9 Wiring diagrams 31
Wiring Diagrams - Three Phase 31

10 External connection diagrams 33
External Connection Diagrams 33

11 Sound data 34
Sound Power Spectrum 34
Sound Pressure Spectrum 35

12 Operation range 36
Operation Range 36

2 Specifications

2-1 Technical Specifications					REYAQ10P	REYAQ12P	REYAQ14P	REYAQ16P
Capacity range				HP	-			
Cooling capacity	Nom.			kW	28 (1)	33.5 (1)	40 (1)	45 (1)
Heating capacity	Nom.			kW	31.5 (2)	37.5 (2)	45 (2)	50 (2)
Capacity control	Steps			%	14 ~ 100		10 ~ 100	
Power input - 50Hz	Cooling	Nom.		kW	-			
	Heating	Nom.		kW	-			
EER					-			
COP					-			
Maximum number of connectable indoor units					-			
Indoor index connection	Min.				-			
	Nom.				-			
	Max.				-			
Casing	Colour				Daikin White			
	Material				Painted galvanized steel plate			
Dimensions	Unit	Height		mm	1,680			
		Width		mm	1,300			
		Depth		mm	765			
	Packed unit	Height		mm	1,885			
		Width		mm	1,425			
		Depth		mm	860			
Weight	Unit			kg	331		339	
	Packed unit			kg	339		347	
Packing	Material				Cardboard Wood EPS			
	Weight			kg	8			
Heat exchanger	Type				Cross fin coil			
Fan	Type				Propeller fan			
	Quantity				2			
	Discharge direction				Vertical			
Fan motor	Quantity				2			
	Drive				Direct drive			
	Output			W	350		750	
Fan motor 2	Drive				Direct drive			
	Output			W	350		750	
Sound power level	Cooling	Nom.		dBA	78	80	83	84
Sound pressure level	Cooling	Nom.		dBA	58	60	62	63
Compressor	Quantity				2			
	Type				Hermetically sealed scroll compressor			
	Starting method				Soft start			
Compressor 2	Type				Hermetically sealed scroll compressor			
	Starting method				Soft start			
Operation range	Cooling	Standard	Min.	ºCDB	-5			
		Max.		ºCDB	43			
	Heating	Min.		ºCWB	-20			
		Max.		ºCWB	15.5			
Refrigerant	Type				R-410A			
	Charge			kg	10.6	10.8	11.1	
	Control				Expansion valve (electronic type)			
Refrigerant oil	Type				Daphne FVC68D			

2 Specifications

2-1 Technical Specifications					REYAQ10P	REYAQ12P	REYAQ14P	REYAQ16P
Piping connections	Liquid	Type			Braze connection			
		OD		mm	9.52	12.7		
	Gas	Type			Braze connection			
		OD		mm	22.2	28.6		
	Discharge gas	Type			Braze connection			
		OD		mm	19.1		22.2	
	Piping length	OU - IU	Max.	m	100			
	Total piping length	System	Actual	m	300			
	Level difference	OU - IU	Outdoor unit in highest position	m	40			
			Indoor unit in highest position	m	40			
		IU - IU	Max.	m	15			
	Additional refrigerant charge			kg/m	See installation manual			
	High pressure side	Design pressure		bar	40			
Defrost method					Deicer			
Safety devices	Item	01			HPS			
		02			Fan motor driver overload protector			
		03			Overcurrent relay			
		04			Inverter overload protector			
PED	Category				Category II			

Standard Accessories : Installation manual; Quantity : 1;

2 Specifications

2-2 Electrical Specifications			REYAQ10P	REYAQ12P	REYAQ14P	REYAQ16P
Power supply	Phase		3~			
	Frequency	Hz	50			
	Voltage	V	380-415			
Voltage range	Min.	%	-10			
	Max.	%	8			
Current	Zmax	Text	0.27		-	
Current - 50Hz	Maximum running current	A	22.1	22.3	32.8	33
	Minimum Ssc value	kVa	843	850	2,045	2,035
	Maximum fuse amps (MFA)	A	25		40	
Wiring connections - 50Hz	For power supply	Quantity	4			
		Remark	Select diameter and type according to national and local regulations			
	For connection with indoor	Quantity	2			
		Remark	F1,F2			
Power supply intake			Both indoor and outdoor unit			

Notes

(1) Cooling: indoor temp. 27ºCDB, 19ºCWB; outdoor temp. 35ºCDB; 100% connection ratio (DX indoor units); For combination with HXHD125, cf. capacity table

(2) Heating: indoor temp. 20ºCDB; outdoor temp. 7ºCDB, 6ºCWB; 100% connection ratio (DX indoor units); For combination with HXHD125, cf. capacity table

(3) Ssc: Short-circuit power

(4) In case of connection with a 20~50 type indoor unit, match to the size of the field pipe using the attached pipe. Connection between the attached pipe and the field pipe must be brazed.

(5) In case the joint diameter does not fit on the triple piping side, a reducer is needed (field supply)

(6) Insulators are necessary (field supply) for the triple piping side

(7) Voltage range: units are suitable for use on electrical systems where voltage supplied to unit terminal is not below or above listed range limits.

(8) Maximum allowable voltage range variation between phases is 2%.

(9) MCA/MFA: MCA = 1.25 x FLA

(10) MFA ≤ 4 x FLA

(11) Next lower standard fuse rating minimum 15A

(12) Select wire size based on the value of MCA

(13) Instead of a fuse, use a circuit breaker

(14) In case of connecting with indoor unit capacity index between 150 and 160, match to the size of the field pipe using the attached pipe. Connection between the attached pipe and the field pipe must be brazed.

(15) In case of connecting with a 200 type indoor unit or capacity index more than 160 and less than 200, match to the size of the field pipe using the attached pipe. Connection between the attached pipe and the field pipe must be brazed.

3 Selection procedure

3 - 1 Selection Procedure

HXHD125A
REYAQ-P

I. Definitions

Index definition of HXHD125A

1) Index for selecting *piping*, calculating *refrigerant charge* and *total connection ratio*
→ Index = 125 (see installation manual & technical specs 3TW60651-1)
2) Index for performing unit capacity calculation/selection
→ Index depends on leaving water temperature ≠ 125 (details are explained below)

Selection procedure

- Outdoor unit heating capacity (design point conditions) = **HC_o** [kW] ► See heating capacity table outdoor unit
- Outdoor unit power input (design point conditions) = **PI_o** (kW) ► See heating capacity table outdoor unit
- HXHD125A capacity calculation index = **R** ► To be looked up (see table below)
- VRV DX indoor capacity index total = **S** ► To be looked up (depends on VRV DX indoor unit type)
- Total indoor capacity index = index VRV DX connected + HXHD125A capacity calculation index = S + R = J ► To be calculated
- HXHD125A heating capacity (design point conditions) = **HC** (kW) ► To be calculated
- HXHD125A power input° (design point conditions) = **PI** (kW) ► To be calculated
- HXHD125A cascade step power input = **P** (kW) ► To be looked up

► $HC = HC_o/J * 112$

Informational remark

► $PI = PI_o/J*R + P$

°: total power input required to operate the cascade system = fraction of outdoor unit power input + HXHD cascade step power input

IIa. Cascade step power input and HXHD-A capacity calculation index

EWT [°C]	40	45	55	65
LWT [°C]	**40**	**55**	**65**	**75**
P [kW]	1.79	1.83	2.33	3.25
R	100	100	96	88

RWT = return water temperature

LWT = leaving water temperature

IIb. Integrated heating capacity correction coefficient for REYAQ

		Inlet port temperature of heat exchanger (°C/RH 85%)						
		-7	*-5*	*-3*	*0*	*3*	*5*	*7*
ß	**REYAQ10/12P**	0.97	0.95	0.90	0.86	0.87	0.92	1.00
	REYAQ14/16P	0.96	0.94	0.89	0.85	0.86	0.91	1.00

Integrated heating capacity = A [kW]

Value given in table of capacity characteristics = B [kW]

Integrated correction factor for frost accumulation = ß

A = B * ß

III. Example

A. Make clear design point

Required capacity for building: 33kW
Outdoor ambient temperature design point: -7°CDB/-7.6°CWB
Indoor ambient temperature design point: 20°C
→ REYAQ14P
Select leaving water temperature HXHD125°: 65°C
→ P & R

HC_o [kW]	33.3	Look up in heating capacity table [=f (Ta indoor; Ta outdoor; HP)]
PI_o [kW]	10.4	Look up in heating capacity table [=f (Ta indoor; Ta outdoor; HP)]
		→ Decide outdoor unit HP class

R	96	Look up table above [=f (leaving water termperature)]
P [kW]	2.33	Look up table above [=f (leaving water termperature)]

A1. Calculate total indoor capacity index

VRV indoor units: 3 * "80" type + 1 * "20" type: S
HXHD125A: R
→ J = R + S

S	260	Depends on DX indoor unit selection
R	96	See above
J	356	Σ

A2. HXHD specifications at design point

$HC = HC_o / J * 112$
$PI = PI_o / J * R + P$

HC [kW]	**10.5**
PI [kW]	**5.13**

B. Check connection ratio

At least 1HXHD-A			OK
DX connection ratio: 50% ≤ x ≤ 130 %	260/350	74%	OK
HXHD-A connection ratio ≤ 100%	125/350	36%	OK
Total connection ratio: 80% ≤ x ≤ 200%	385/350	110%	OK

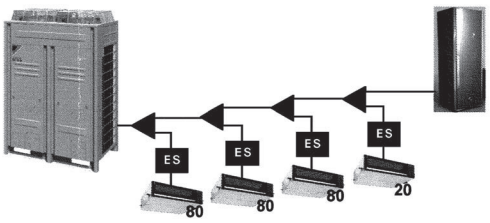

3TW60669-2

4 Combination table

4 - 1 Combination Table

HXHD-A
REYAQ-P

I. Outdoor/Indoor combination table

Heating only hydrobox indoor unit	Outdoor unit	REYAQ10P	REYAQ12P	REYAQ14	REYAQ16P
HXHD125A		O	O	O	O

II. Kit availability

1. Kits connected to the outdoor unit

Reference	Description	REYAQ10P	REYAQ12P	REYAQ14P	REYAQ16P
KHRQ(M)22M29H8	Refnet header	O	O	O	O
KHRQ(M)22M64H8	Refnet header		O	O	O
KHRQ(M)22M75H8	Refnet joint			O	O
KHRQ(M)22M20H8	Refnet joint	O	O	O	O
KHRQ(M)22M29H9	Refnet joint	O	O	O	O
KHRQ(M)22M64H8	Refnet joint		O	O	O
KHRQ(M)22M75H8	Refnet joint			O	O
KHRQ(M)23M29H8	Refnet header	O	O	O	O
KHRQ(M)23M64H8	Refnet header		O	O	O
KHRQ(M)23M75H8	Refnet joint			O	O
KHRQ(M)23M20T8	Refnet joint	O	O	O	O
KHRQ(M)23M29T9	Refnet joint	O	O	O	O
KHRQ(M)23M64T8	Refnet joint		O	O	O
KHRQ(M)23M75T8	Refnet joint			O	O
KWC25C450	Drain pan kit (1)	O	O	O	O
BSVQ100P8		O (Δ2)	O (Δ2)	O (Δ2)	O (Δ2)
BSVQ160P8	BSVQ box for Heat Recovery (**Individual** Branch Selector)	O (Δ2)	O (Δ2)	O (Δ2)	O (Δ2)
BSVQ250P8		O (Δ2)	O (Δ2)	O (Δ2)	O (Δ2)
BSV4Q100PV	BSVQ box for Heat Recovery (**Multi** Branch Selector)	O (Δ2)	O (Δ2)	O (Δ2)	O (Δ2)
BSV6Q100PV		O (Δ2)	O (Δ2)	O (Δ2)	O (Δ2)
EKBSVQLNP	Sound reduction kit for individual BSVQ box (Δ1)	O	O	O	O
BHGP26A1	Digital Pressure gauge kit	O	O	O	O

(Δ1): Only available for individual BSVQ boxes (not possible for Central BSV4Q/BSV6Q). Allows to reduce operating sound of BSVQ-box (requires 1 sound kit per BSVQ - box)

(Δ2): - Multi tenant is possible - Need connect option-PCB DTA114A61 to each BSVQ-box & need compatible indoor unit.
- Not required for hydro box HXHD125A, only for connection of DX indoor units.

2. Kits connected to the indoor unit

Reference	Description	Indoor Unit
		HXHD125A
EKHTS200[AC]	Stainless domestic hot water tank 200 l	O
EKHTS260[AC]	Stainless domestic hot water tank 260 l	O
EKHTSU200[AC]	Stainless domestic hot water tank 260 l UK - version	O
EKHTSU260[AC]	Stainless domestic hot water tank 260 l UK - version	O
EKHWP300A	PP tank	O
EKHWP500A	PP tank	O
EKRP1HBAA	Digital I/O PCB	O
EKRP1AHTA	Demand PCB (3)	O
EKRUAHTB	Remote user interface [remocon] (4)	O
EKRTWA	Wired Room thermostat (2)	O
EKRTR1	Wireless Room thermostat (2)	O
EKRTETS	Remote sensor for Room thermostat (2)	O

3. Kits connected to the domestic hot water tank

Reference	Description	Domestic hot water tank			
		EKHTS		EKHTSU	
		200A	260A	200AA	260AA
EKUHWHTA	Option kit for UK EKHTSU200-260A	-	-	O	O
EKFMAHTB (5)	Option kit for floor mounted tank	O	O	O	O

Remark: Other combinations are not garanteed.

(1) For allowed installation, see Installation Manual
(2) Requires Demand PCB EKRP1AHTA
(3) Requires to install to be able to connect Roomthermostat
(4) Same controller as supplied with Cascade unit can be mounted parallel or on other location. If 2 controllers are installed, the installer needs to select 1 master & 1 slave
(5) Only required if tank is NOT mounted on top of cascade indoor unit

NOTES

1 To one outdoor unit, multiple hydrobox units can be connected (≤100% connection ratio; further information, see technical data)
2 All VRV indoor units can be connected.

3TW60659-1A

5 Capacity tables

5 - 1 Cooling Capacity Tables

REYAQ10P

TC: Total Capacity: kW ; PI: Power Input: kW (compressor + outdoor fan motor)

Combination (%)	Capacity index (kW)	Outdoor air temp. (°CDB)	Indoor air temperature: 14.0 °CWB 20.0 °CDB TC kW	14.0 °CWB 20.0 °CDB PI kW	16.0 °CWB 23.0 °CDB TC kW	16.0 °CWB 23.0 °CDB PI kW	18.0 °CWB 26.0 °CDB TC kW	18.0 °CWB 26.0 °CDB PI kW	19.0 °CWB 27.0 °CDB TC kW	19.0 °CWB 27.0 °CDB PI kW	20.0 °CWB 28.0 °CDB TC kW	20.0 °CWB 28.0 °CDB PI kW	22.0 °CWB 30.0 °CDB TC kW	22.0 °CWB 30.0 °CDB PI kW	24.0 °CWB 32.0 °CDB TC kW	24.0 °CWB 32.0 °CDB PI kW
130	325 (36.40)	10	24.6	3.26	29.3	4.00	34.0	4.75	35.3	4.75	35.7	4.75	36.6	4.75	37.5	4.75
		12	24.6	3.32	29.3	4.07	34.0	4.84	34.8	4.84	35.3	4.84	36.1	4.84	37.0	4.84
		14	24.6	3.39	29.3	4.15	33.9	4.90	34.4	4.90	34.8	4.90	35.7	4.90	36.6	4.90
		16	24.6	3.45	29.3	4.23	33.5	4.88	33.9	4.90	34.3	4.90	35.2	4.90	36.1	4.91
		18	24.6	3.52	29.3	4.31	33.0	5.07	33.4	5.09	33.9	5.12	34.8	5.17	35.7	5.22
		20	24.6	3.59	29.3	4.60	32.5	5.31	33.0	5.34	33.4	5.37	34.3	5.42	35.2	5.47
		21	24.6	3.69	29.3	4.76	32.3	5.44	32.8	5.47	33.2	5.49	34.1	5.55	35.0	5.60
		23	24.6	3.95	29.3	5.10	31.9	5.69	32.3	5.71	32.7	5.74	33.6	5.80	34.5	5.86
		25	24.6	4.23	29.3	5.47	31.4	5.93	31.9	5.97	32.3	6.00	33.2	6.06	34.1	6.12
		27	24.6	4.51	29.3	5.85	31.0	6.18	31.4	6.22	31.8	6.25	32.7	6.31	33.6	6.38
		29	24.6	4.82	29.3	6.25	30.5	6.44	30.9	6.47	31.4	6.50	32.3	6.57	33.2	6.64
		31	24.6	5.14	29.2	6.61	30.0	6.69	30.5	6.72	30.9	6.76	31.8	6.83	32.7	6.91
		33	24.6	5.48	28.7	6.86	29.6	6.94	30.0	6.98	30.5	7.02	31.4	7.09	32.2	7.17
		35	24.6	5.83	28.2	7.11	29.1	7.19	29.6	7.23	30.0	7.28	30.9	7.36	31.8	7.44
		37	24.6	6.21	27.8	7.36	28.7	7.45	29.1	7.49	29.6	7.54	30.4	7.62	31.3	7.71
		39	24.6	6.61	27.3	7.62	28.2	7.71	28.7	7.75	29.1	7.80	30.0	7.89	30.9	7.98
120	300 (33.60)	10	22.7	2.98	27.0	3.64	31.4	4.33	33.6	4.68	35.2	4.68	36.0	4.68	36.8	4.68
		12	22.7	3.04	27.0	3.71	31.4	4.41	33.6	4.77	34.7	4.77	35.5	4.77	36.3	4.77
		14	22.7	3.09	27.0	3.78	31.4	4.50	33.6	4.86	34.2	4.86	35.1	4.86	35.9	4.86
		16	22.7	3.15	27.0	3.86	31.4	4.59	33.4	4.90	33.8	4.90	34.6	4.90	35.4	4.91
		18	22.7	3.21	27.0	3.93	31.4	4.74	32.9	5.06	33.3	5.09	34.1	5.13	35.0	5.18
		20	22.7	3.28	27.0	4.09	31.4	5.10	32.5	5.31	32.9	5.33	33.7	5.38	34.5	5.43
		21	22.7	3.31	27.0	4.23	31.4	5.28	32.2	5.43	32.6	5.46	33.5	5.51	34.3	5.56
		23	22.7	3.53	27.0	4.54	31.4	5.65	31.8	5.68	32.2	5.71	33.0	5.76	33.8	5.81
		25	22.7	3.78	27.0	4.85	30.9	5.90	31.3	5.93	31.7	5.96	32.6	6.01	33.4	6.07
		27	22.7	4.03	27.0	5.19	30.5	6.15	30.9	6.18	31.3	6.21	32.1	6.27	32.9	6.33
		29	22.7	4.30	27.0	5.54	30.0	6.40	30.4	6.43	30.8	6.46	31.6	6.52	32.5	6.59
		31	22.7	4.58	27.0	5.92	29.6	6.65	30.0	6.68	30.4	6.71	31.2	6.78	32.0	6.85
		33	22.7	4.88	27.0	6.31	29.1	6.90	29.5	6.93	29.9	6.97	30.7	7.04	31.5	7.11
		35	22.7	5.20	27.0	6.73	28.6	7.15	29.0	7.19	29.5	7.22	30.3	7.30	31.1	7.37
		37	22.7	5.53	27.0	7.17	28.2	7.40	28.6	7.44	29.0	7.48	29.8	7.56	30.6	7.64
		39	22.7	5.88	26.9	7.57	27.7	7.66	28.1	7.70	28.5	7.74	29.4	7.82	30.2	7.91
110	275 (30.80)	10	20.8	2.71	24.8	3.30	28.8	3.92	30.8	4.23	32.8	4.56	35.3	4.66	36.1	4.66
		12	20.8	2.76	24.8	3.36	28.8	3.99	30.8	4.31	32.8	4.64	34.9	4.75	35.6	4.75
		14	20.8	2.81	24.8	3.42	28.8	4.07	30.8	4.40	32.8	4.73	34.4	4.84	35.2	4.84
		16	20.8	2.86	24.8	3.49	28.8	4.15	30.8	4.48	32.8	4.82	34.0	4.90	34.7	4.91
		18	20.8	2.91	24.8	3.56	28.8	4.23	30.8	4.61	32.8	5.05	33.5	5.10	34.3	5.14
		20	20.8	2.97	24.8	3.63	28.8	4.48	30.8	4.95	32.3	5.30	33.1	5.35	33.8	5.39
		21	20.8	3.00	24.8	3.74	28.8	4.64	30.8	5.13	32.1	5.42	32.8	5.47	33.6	5.52
		23	20.8	3.14	24.8	4.00	28.8	4.97	30.8	5.50	31.6	5.67	32.4	5.72	33.1	5.77
		25	20.8	3.35	24.8	4.28	28.8	5.33	30.8	5.89	31.2	5.92	31.9	5.97	32.7	6.02
		27	20.8	3.58	24.8	4.57	28.8	5.70	30.3	6.14	30.7	6.17	31.5	6.22	32.2	6.28
		29	20.8	3.81	24.8	4.88	28.8	6.09	29.9	6.39	30.3	6.42	31.0	6.48	31.8	6.53
		31	20.8	4.06	24.8	5.21	28.8	6.50	29.4	6.64	29.8	6.67	30.6	6.73	31.3	6.79
		33	20.8	4.32	24.8	5.55	28.6	6.85	29.0	6.89	29.4	6.92	30.1	6.99	30.9	7.05
		35	20.8	4.60	24.8	5.91	28.2	7.10	28.5	7.14	28.9	7.17	29.6	7.24	30.4	7.31
		37	20.8	4.89	24.8	6.30	27.7	7.35	28.1	7.39	28.4	7.43	29.2	7.50	29.9	7.57
		39	20.8	5.20	24.8	6.71	27.2	7.61	27.6	7.64	28.0	7.68	28.7	7.76	29.5	7.84
100	250 (28.00)	10	18.9	2.44	22.5	2.96	26.2	3.51	28.0	3.79	29.8	4.08	33.5	4.66	35.4	4.66
		12	18.9	2.49	22.5	3.02	26.2	3.58	28.0	3.86	29.8	4.16	33.5	4.75	34.9	4.75
		14	18.9	2.53	22.5	3.07	26.2	3.64	28.0	3.94	29.8	4.24	33.5	4.84	34.5	4.84
		16	18.9	2.58	22.5	3.13	26.2	3.71	28.0	4.01	29.8	4.32	33.4	4.90	34.0	4.91
		18	18.9	2.62	22.5	3.19	26.2	3.79	28.0	4.09	29.8	4.40	32.9	5.06	33.6	5.10
		20	18.9	2.67	22.5	3.25	26.2	3.90	28.0	4.30	29.8	4.72	32.4	5.31	33.1	5.35
		21	18.9	2.70	22.5	3.29	26.2	4.04	28.0	4.45	29.8	4.89	32.2	5.43	32.9	5.47
		23	18.9	2.77	22.5	3.50	26.2	4.33	28.0	4.77	29.8	5.24	31.8	5.68	32.4	5.72
		25	18.9	2.96	22.5	3.75	26.2	4.63	28.0	5.11	29.8	5.61	31.3	5.93	32.0	5.97
		27	18.9	3.15	22.5	4.00	26.2	4.95	28.0	5.46	29.8	6.00	30.8	6.18	31.5	6.23
		29	18.9	3.36	22.5	4.26	26.2	5.28	28.0	5.84	29.7	6.37	30.4	6.43	31.1	6.48
		31	18.9	3.57	22.5	4.54	26.2	5.64	28.0	6.23	29.3	6.62	29.9	6.68	30.6	6.73
		33	18.9	3.80	22.5	4.84	26.2	6.01	28.0	6.65	28.8	6.87	29.5	6.93	30.2	6.99
		35	18.9	4.04	22.5	5.15	26.2	6.41	28.0	7.09	28.3	7.12	29.0	7.18	29.7	7.25
		37	18.9	4.29	22.5	5.48	26.2	6.83	27.5	7.34	27.9	7.37	28.6	7.44	29.2	7.51
		39	18.9	4.55	22.5	5.83	26.2	7.27	27.1	7.59	27.4	7.63	28.1	7.70	28.8	7.76

3TW60652-3(1)

NOTES - ANMERKUNGEN - Σημειώσεις - NOTAS - REMARQUES - NOTE - OPMERKINGEN - примечания - NOTLAR

1 The above table shows the average value of conditions which may occur.
Die obige Tabelle zeigt den Durchschnittswert der Bedingungen, die auftreten können.
Στον παραπάνω πίνακα αναγράφεται η μέση τιμή για συνθήκες που μπορεί να προκύψουν.
La tabla de arriba muestra el valor medio de condiciones que pueden ocurrir.
Le tableau ci-dessus donne la valeur moyenne pour des conditions qui peuvent survenir.
La tabella in alto mostra il valore delle condizioni medie che si possono riscontrare.
De tabel hierboven geeft de gemiddelde waarde aan van situaties die kunnen voorvallen.
Таблица расположенная выше показывает среднее значение условий, которые могут наступить.
Yukarıdaki tablo meydana gelebilecek koşulların ortalama değerini göstermektedir.

5 Capacity tables

5 - 1 Cooling Capacity Tables

REYAQ10P

TC: Total Capacity: kW ; PI: Power Input: kW (compressor + outdoor fan motor)

Combination (%)	Capacity index (kW)	Outdoor air temp. (°CDB)	Indoor air temperature: 14.0 °CWB / 20.0 °CDB		16.0 °CWB / 23.0 °CDB		18.0 °CWB / 26.0 °CDB		19.0 °CWB / 27.0 °CDB		20.0 °CWB / 28.0 °CDB		22.0 °CWB / 30.0 °CDB		24.0 °CWB / 32.0 °CDB	
			TC	PI	TC	PI	TC	PI	TC	PI	TC	PI	TC	PI	TC	PI
			kW	kW	kW	kW	kW	kW	kW	kW	kW	kW	kW	kW	kW	kW
90	225	10	17.0	2.19	20.3	2.64	23.6	3.11	25.2	3.36	26.8	3.61	30.1	4.13	33.4	4.65
	(25.20)	12	17.0	2.22	20.3	2.68	23.6	3.17	25.2	3.42	26.8	3.68	30.1	4.20	33.4	4.74
		14	17.0	2.26	20.3	2.73	23.6	3.23	25.2	3.49	26.8	3.75	30.1	4.28	33.4	4.83
		16	17.0	2.30	20.3	2.78	23.6	3.29	25.2	3.56	26.8	3.82	30.1	4.37	33.3	4.91
		18	17.0	2.34	20.3	2.84	23.6	3.36	25.2	3.62	26.8	3.90	30.1	4.45	32.9	5.06
		20	17.0	2.39	20.3	2.89	23.6	3.42	25.2	3.70	26.8	4.04	30.1	4.79	32.4	5.31
		21	17.0	2.41	20.3	2.92	23.6	3.48	25.2	3.83	26.8	4.19	30.1	4.96	32.2	5.43
		23	17.0	2.46	20.3	3.04	23.6	3.73	25.2	4.10	26.8	4.49	30.1	5.32	31.7	5.68
		25	17.0	2.59	20.3	3.25	23.6	3.98	25.2	4.38	26.8	4.80	30.1	5.70	31.3	5.93
		27	17.0	2.75	20.3	3.46	23.6	4.25	25.2	4.68	26.8	5.13	30.1	6.09	30.8	6.18
		29	17.0	2.93	20.3	3.69	23.6	4.54	25.2	5.00	26.8	5.48	29.8	6.38	30.4	6.43
		31	17.0	3.11	20.3	3.93	23.6	4.84	25.2	5.33	26.8	5.85	29.3	6.63	29.9	6.68
		33	17.0	3.31	20.3	4.18	23.6	5.16	25.2	5.68	26.8	6.24	28.9	6.88	29.5	6.93
		35	17.0	3.51	20.3	4.44	23.6	5.49	25.2	6.06	26.8	6.65	28.4	7.13	29.0	7.18
		37	17.0	3.73	20.3	4.73	23.6	5.85	25.2	6.45	26.8	7.09	27.9	7.38	28.6	7.44
		39	17.0	3.95	20.3	5.02	23.6	6.22	25.2	6.87	26.8	7.55	27.5	7.63	28.1	7.69
80	200	10	15.1	1.94	18.0	2.32	20.9	2.73	22.4	2.94	23.9	3.16	26.8	3.60	29.7	4.06
	(22.40)	12	15.1	1.97	18.0	2.36	20.9	2.78	22.4	3.00	23.9	3.22	26.8	3.67	29.7	4.13
		14	15.1	2.01	18.0	2.41	20.9	2.83	22.4	3.05	23.9	3.28	26.8	3.74	29.7	4.21
		16	15.1	2.04	18.0	2.45	20.9	2.88	22.4	3.11	23.9	3.34	26.8	3.81	29.7	4.29
		18	15.1	2.07	18.0	2.49	20.9	2.94	22.4	3.17	23.9	3.40	26.8	3.89	29.7	4.38
		20	15.1	2.11	18.0	2.54	20.9	3.00	22.4	3.23	23.9	3.47	26.8	4.03	29.7	4.69
		21	15.1	2.13	18.0	2.57	20.9	3.03	22.4	3.26	23.9	3.54	26.8	4.17	29.7	4.85
		23	15.1	2.17	18.0	2.61	20.9	3.17	22.4	3.48	23.9	3.79	26.8	4.47	29.7	5.20
		25	15.1	2.24	18.0	2.78	20.9	3.39	22.4	3.71	23.9	4.05	26.8	4.78	29.7	5.57
		27	15.1	2.38	18.0	2.97	20.9	3.61	22.4	3.96	23.9	4.33	26.8	5.11	29.7	5.96
		29	15.1	2.53	18.0	3.16	20.9	3.85	22.4	4.23	23.9	4.62	26.8	5.46	29.7	6.37
		31	15.1	2.69	18.0	3.36	20.9	4.10	22.4	4.51	23.9	4.93	26.8	5.83	29.2	6.62
		33	15.1	2.85	18.0	3.57	20.9	4.37	22.4	4.80	23.9	5.25	26.8	6.22	28.8	6.87
		35	15.1	3.03	18.0	3.79	20.9	4.65	22.4	5.11	23.9	5.59	26.8	6.63	28.3	7.12
		37	15.1	3.21	18.0	4.03	20.9	4.94	22.4	5.43	23.9	5.95	26.8	7.06	27.9	7.37
		39	15.1	3.40	18.0	4.27	20.9	5.25	22.4	5.78	23.9	6.34	26.8	7.52	27.4	7.62
70	175	10	13.2	1.71	15.8	2.03	18.3	2.36	19.6	2.54	20.9	2.72	23.4	3.09	26.0	3.48
	(19.60)	12	13.2	1.73	15.8	2.06	18.3	2.41	19.6	2.59	20.9	2.77	23.4	3.15	26.0	3.54
		14	13.2	1.76	15.8	2.09	18.3	2.45	19.6	2.63	20.9	2.82	23.4	3.21	26.0	3.61
		16	13.2	1.79	15.8	2.13	18.3	2.49	19.6	2.68	20.9	2.87	23.4	3.27	26.0	3.68
		18	13.2	1.82	15.8	2.17	18.3	2.54	19.6	2.73	20.9	2.93	23.4	3.33	26.0	3.75
		20	13.2	1.85	15.8	2.21	18.3	2.59	19.6	2.78	20.9	2.99	23.4	3.40	26.0	3.86
		21	13.2	1.86	15.8	2.23	18.3	2.61	19.6	2.81	20.9	3.01	23.4	3.45	26.0	3.99
		23	13.2	1.90	15.8	2.27	18.3	2.66	19.6	2.91	20.9	3.16	23.4	3.70	26.0	4.28
		25	13.2	1.93	15.8	2.36	18.3	2.84	19.6	3.10	20.9	3.37	23.4	3.95	26.0	4.58
		27	13.2	2.04	15.8	2.51	18.3	3.03	19.6	3.31	20.9	3.60	23.4	4.22	26.0	4.89
		29	13.2	2.17	15.8	2.67	18.3	3.22	19.6	3.52	20.9	3.84	23.4	4.50	26.0	5.22
		31	13.2	2.30	15.8	2.83	18.3	3.43	19.6	3.75	20.9	4.08	23.4	4.80	26.0	5.57
		33	13.2	2.43	15.8	3.01	18.3	3.65	19.6	3.99	20.9	4.35	23.4	5.11	26.0	5.94
		35	13.2	2.58	15.8	3.19	18.3	3.87	19.6	4.24	20.9	4.62	23.4	5.44	26.0	6.33
		37	13.2	2.73	15.8	3.38	18.3	4.11	19.6	4.51	20.9	4.92	23.4	5.80	26.0	6.75
		39	13.2	2.89	15.8	3.59	18.3	4.37	19.6	4.79	20.9	5.23	23.4	6.17	26.0	7.19
60	150	10	11.3	1.48	13.5	1.74	15.7	2.02	16.8	2.16	17.9	2.31	20.1	2.61	22.3	2.92
	(16.80)	12	11.3	1.51	13.5	1.77	15.7	2.05	16.8	2.20	17.9	2.35	20.1	2.65	22.3	2.98
		14	11.3	1.53	13.5	1.80	15.7	2.08	16.8	2.23	17.9	2.39	20.1	2.70	22.3	3.03
		16	11.3	1.55	13.5	1.83	15.7	2.12	16.8	2.27	17.9	2.43	20.1	2.75	22.3	3.09
		18	11.3	1.57	13.5	1.86	15.7	2.16	16.8	2.31	17.9	2.47	20.1	2.80	22.3	3.15
		20	11.3	1.60	13.5	1.89	15.7	2.20	16.8	2.36	17.9	2.52	20.1	2.86	22.3	3.21
		21	11.3	1.61	13.5	1.90	15.7	2.22	16.8	2.38	17.9	2.54	20.1	2.89	22.3	3.24
		23	11.3	1.64	13.5	1.94	15.7	2.26	16.8	2.42	17.9	2.59	20.1	3.00	22.3	3.45
		25	11.3	1.67	13.5	1.97	15.7	2.35	16.8	2.55	17.9	2.76	20.1	3.20	22.3	3.68
		27	11.3	1.73	13.5	2.09	15.7	2.50	16.8	2.71	17.9	2.94	20.1	3.41	22.3	3.93
		29	11.3	1.83	13.5	2.22	15.7	2.65	16.8	2.88	17.9	3.13	20.1	3.64	22.3	4.19
		31	11.3	1.94	13.5	2.36	15.7	2.82	16.8	3.07	17.9	3.32	20.1	3.87	22.3	4.47
		33	11.3	2.05	13.5	2.50	15.7	2.99	16.8	3.26	17.9	3.53	20.1	4.12	22.3	4.76
		35	11.3	2.17	13.5	2.64	15.7	3.17	16.8	3.46	17.9	3.75	20.1	4.38	22.3	5.06
		37	11.3	2.29	13.5	2.80	15.7	3.37	16.8	3.67	17.9	3.98	20.1	4.66	22.3	5.39
		39	11.3	2.42	13.5	2.96	15.7	3.57	16.8	3.89	17.9	4.23	20.1	4.95	22.3	5.73
50	125	10	9.45	1.28	11.3	1.48	13.1	1.69	14.0	1.80	14.9	1.92	16.7	2.15	18.6	2.40
	(14.00)	12	9.45	1.29	11.3	1.50	13.1	1.72	14.0	1.83	14.9	1.95	16.7	2.19	18.6	2.44
		14	9.45	1.31	11.3	1.52	13.1	1.74	14.0	1.86	14.9	1.98	16.7	2.22	18.6	2.48
		16	9.45	1.33	11.3	1.54	13.1	1.77	14.0	1.89	14.9	2.01	16.7	2.26	18.6	2.53
		18	9.45	1.35	11.3	1.57	13.1	1.80	14.0	1.92	14.9	2.05	16.7	2.30	18.6	2.57
		20	9.45	1.37	11.3	1.59	13.1	1.83	14.0	1.95	14.9	2.08	16.7	2.35	18.6	2.62
		21	9.45	1.38	11.3	1.60	13.1	1.85	14.0	1.97	14.9	2.10	16.7	2.37	18.6	2.65
		23	9.45	1.40	11.3	1.63	13.1	1.88	14.0	2.01	14.9	2.14	16.7	2.41	18.6	2.71
		25	9.45	1.42	11.3	1.66	13.1	1.91	14.0	2.05	14.9	2.20	16.7	2.53	18.6	2.89
		27	9.45	1.44	11.3	1.72	13.1	2.02	14.0	2.18	14.9	2.34	16.7	2.70	18.6	3.08
		29	9.45	1.52	11.3	1.82	13.1	2.14	14.0	2.31	14.9	2.49	16.7	2.87	18.6	3.28
		31	9.45	1.61	11.3	1.92	13.1	2.27	14.0	2.45	14.9	2.64	16.7	3.05	18.6	3.48
		33	9.45	1.70	11.3	2.04	13.1	2.40	14.0	2.60	14.9	2.81	16.7	3.24	18.6	3.71
		35	9.45	1.79	11.3	2.15	13.1	2.55	14.0	2.76	14.9	2.97	16.7	3.44	18.6	3.94
		37	9.45	1.89	11.3	2.27	13.1	2.69	14.0	2.92	14.9	3.15	16.7	3.65	18.6	4.18
		39	9.45	1.99	11.3	2.40	13.1	2.85	14.0	3.09	14.9	3.34	16.7	3.87	18.6	4.44

3TW60652-3(2)

5 Capacity tables

5 - 1 Cooling Capacity Tables

REYAQ12P

TC: Total Capacity: kW ; PI: Power Input: kW (compressor + outdoor fan motor)

Combination (%)	Capacity index (kW)	Outdoor air temp. (°CDB)	Indoor air temperature: 14.0 °CWB / 20.0 °CDB		16.0 °CWB / 23.0 °CDB		18.0 °CWB / 26.0 °CDB		19.0 °CWB / 27.0 °CDB		20.0 °CWB / 28.0 °CDB		22.0 °CWB / 30.0 °CDB		24.0 °CWB / 32.0 °CDB	
			TC	PI	TC	PI	TC	PI	TC	PI	TC	PI	TC	PI	TC	PI
			kW	kW	kW	kW	kW	kW	kW	kW	kW	kW	kW	kW	kW	kW
130	390 (43.55)	10	29.4	4.02	35.1	4.92	40.7	5.85	42.2	5.85	42.7	5.85	43.8	5.85	44.8	5.85
		12	29.4	4.09	35.1	5.01	40.7	5.96	41.6	5.96	42.2	5.96	43.2	5.96	44.3	5.96
		14	29.4	4.17	35.1	5.10	40.6	6.03	41.1	6.03	41.6	6.03	42.7	6.03	43.8	6.03
		16	29.4	4.25	35.1	5.20	40.0	6.00	40.6	6.02	41.1	6.02	42.1	6.03	43.2	6.04
		18	29.4	4.33	35.1	5.31	39.5	6.23	40.0	6.26	40.5	6.29	41.6	6.35	42.7	6.42
		20	29.4	4.42	35.1	5.65	38.9	6.54	39.5	6.57	40.0	6.60	41.1	6.67	42.1	6.73
		21	29.4	4.54	35.1	5.86	38.7	6.69	39.2	6.72	39.7	6.76	40.8	6.82	41.8	6.89
		23	29.4	4.86	35.1	6.28	38.1	6.99	38.7	7.03	39.2	7.06	40.2	7.14	41.3	7.21
		25	29.4	5.20	35.1	6.72	37.6	7.30	38.1	7.34	38.6	7.37	39.7	7.45	40.8	7.53
		27	29.4	5.55	35.1	7.19	37.0	7.61	37.6	7.65	38.1	7.69	39.2	7.77	40.2	7.85
		29	29.4	5.93	35.1	7.68	36.5	7.91	37.0	7.96	37.5	8.00	38.6	8.08	39.7	8.17
		31	29.4	6.32	34.9	8.13	35.9	8.22	36.5	8.27	37.0	8.31	38.1	8.40	39.1	8.49
		33	29.4	6.74	34.3	8.44	35.4	8.54	35.9	8.58	36.5	8.63	37.5	8.73	38.6	8.82
		35	29.4	7.18	33.8	8.75	34.9	8.85	35.4	8.90	35.9	8.95	37.0	9.05	38.0	9.15
		37	29.4	7.64	33.2	9.06	34.3	9.16	34.8	9.21	35.4	9.27	36.4	9.37	37.5	9.48
		39	29.4	8.14	32.7	9.37	33.8	9.48	34.3	9.53	34.8	9.59	35.9	9.70	36.9	9.81
120	360 (40.20)	10	27.1	3.67	32.4	4.48	37.6	5.33	40.2	5.76	42.1	5.76	43.0	5.76	44.0	5.76
		12	27.1	3.74	32.4	4.57	37.6	5.43	40.2	5.87	41.5	5.87	42.5	5.87	43.5	5.87
		14	27.1	3.81	32.4	4.65	37.6	5.53	40.2	5.98	41.0	5.98	41.9	5.98	42.9	5.98
		16	27.1	3.88	32.4	4.74	37.6	5.64	39.9	6.02	40.4	6.02	41.4	6.03	42.4	6.04
		18	27.1	3.95	32.4	4.84	37.6	5.83	39.4	6.23	39.9	6.26	40.9	6.31	41.8	6.37
		20	27.1	4.03	32.4	5.03	37.6	6.27	38.8	6.53	39.3	6.56	40.3	6.62	41.3	6.68
		21	27.1	4.07	32.4	5.21	37.6	6.50	38.6	6.68	39.1	6.71	40.0	6.77	41.0	6.84
		23	27.1	4.35	32.4	5.58	37.5	6.95	38.0	6.99	38.5	7.02	39.5	7.09	40.5	7.15
		25	27.1	4.65	32.4	5.97	37.0	7.26	37.5	7.29	38.0	7.33	38.9	7.40	39.9	7.47
		27	27.1	4.96	32.4	6.38	36.4	7.56	36.9	7.60	37.4	7.64	38.4	7.71	39.4	7.78
		29	27.1	5.29	32.4	6.82	35.9	7.87	36.4	7.91	36.9	7.95	37.9	8.02	38.8	8.10
		31	27.1	5.64	32.4	7.28	35.4	8.17	35.8	8.22	36.3	8.26	37.3	8.34	38.3	8.42
		33	27.1	6.00	32.4	7.76	34.8	8.48	35.3	8.53	35.8	8.57	36.8	8.66	37.7	8.75
		35	27.1	6.39	32.4	8.28	34.3	8.79	34.8	8.84	35.2	8.88	36.2	8.98	37.2	9.07
		37	27.1	6.80	32.4	8.82	33.7	9.10	34.2	9.15	34.7	9.20	35.7	9.30	36.7	9.40
		39	27.1	7.24	32.2	9.31	33.2	9.42	33.7	9.47	34.2	9.52	35.1	9.62	36.1	9.72
110	330 (36.85)	10	24.9	3.33	29.7	4.06	34.5	4.82	36.9	5.21	39.2	5.60	42.3	5.73	43.2	5.73
		12	24.9	3.39	29.7	4.13	34.5	4.91	36.9	5.31	39.2	5.71	41.7	5.84	42.6	5.84
		14	24.9	3.45	29.7	4.21	34.5	5.00	36.9	5.41	39.2	5.82	41.2	5.95	42.1	5.95
		16	24.9	3.52	29.7	4.29	34.5	5.10	36.9	5.51	39.2	5.93	40.6	6.03	41.5	6.04
		18	24.9	3.58	29.7	4.38	34.5	5.20	36.9	5.66	39.2	6.22	40.1	6.27	41.0	6.32
		20	24.9	3.65	29.7	4.46	34.5	5.51	36.9	6.09	38.7	6.52	39.6	6.57	40.5	6.63
		21	24.9	3.69	29.7	4.60	34.5	5.71	36.9	6.31	38.4	6.67	39.3	6.73	40.2	6.78
		23	24.9	3.86	29.7	4.92	34.5	6.12	36.9	6.77	37.8	6.97	38.7	7.03	39.6	7.10
		25	24.9	4.12	29.7	5.27	34.5	6.55	36.9	7.25	37.3	7.28	38.2	7.34	39.1	7.41
		27	24.9	4.40	29.7	5.63	34.5	7.01	36.3	7.55	36.8	7.59	37.7	7.65	38.5	7.72
		29	24.9	4.69	29.7	6.00	34.5	7.49	35.8	7.86	36.2	7.89	37.1	7.96	38.0	8.04
		31	24.9	4.99	29.7	6.40	34.5	7.99	35.2	8.16	35.7	8.20	36.6	8.28	37.5	8.35
		33	24.9	5.32	29.7	6.83	34.2	8.43	34.7	8.47	35.1	8.51	36.0	8.59	36.9	8.67
		35	24.9	5.65	29.7	7.27	33.7	8.74	34.1	8.78	34.6	8.82	35.5	8.91	36.4	8.99
		37	24.9	6.01	29.7	7.75	33.1	9.04	33.6	9.09	34.0	9.13	34.9	9.22	35.8	9.31
		39	24.9	6.39	29.7	8.25	32.6	9.35	33.0	9.40	33.5	9.45	34.4	9.54	35.3	9.64
100	300 (33.50)	10	22.6	3.00	27.0	3.64	31.3	4.32	33.5	4.66	35.7	5.02	40.0	5.73	42.4	5.73
		12	22.6	3.06	27.0	3.71	31.3	4.40	33.5	4.75	35.7	5.11	40.0	5.84	41.8	5.84
		14	22.6	3.11	27.0	3.78	31.3	4.48	33.5	4.84	35.7	5.21	40.0	5.95	41.3	5.95
		16	22.6	3.17	27.0	3.85	31.3	4.57	33.5	4.94	35.7	5.31	39.9	6.03	40.7	6.04
		18	22.6	3.23	27.0	3.93	31.3	4.66	33.5	5.03	35.7	5.42	39.4	6.23	40.2	6.27
		20	22.6	3.29	27.0	4.00	31.3	4.80	33.5	5.29	35.7	5.80	38.8	6.53	39.6	6.58
		21	22.6	3.32	27.0	4.04	31.3	4.97	33.5	5.48	35.7	6.01	38.5	6.68	39.4	6.73
		23	22.6	3.41	27.0	4.31	31.3	5.32	33.5	5.87	35.7	6.44	38.0	6.98	38.8	7.04
		25	22.6	3.64	27.0	4.61	31.3	5.69	33.5	6.28	35.7	6.90	37.4	7.29	38.3	7.35
		27	22.6	3.88	27.0	4.92	31.3	6.09	33.5	6.72	35.7	7.38	36.9	7.60	37.7	7.66
		29	22.6	4.13	27.0	5.24	31.3	6.50	33.5	7.18	35.5	7.84	36.4	7.90	37.2	7.97
		31	22.6	4.39	27.0	5.59	31.3	6.94	33.5	7.66	35.0	8.14	35.8	8.21	36.6	8.28
		33	22.6	4.67	27.0	5.95	31.3	7.40	33.5	8.18	34.5	8.45	35.3	8.52	36.1	8.60
		35	22.6	4.96	27.0	6.34	31.3	7.88	33.5	8.72	33.9	8.76	34.7	8.84	35.5	8.91
		37	22.6	5.27	27.0	6.74	31.3	8.40	33.0	9.03	33.4	9.07	34.2	9.15	35.0	9.23
		39	22.6	5.60	27.0	7.17	31.3	8.95	32.4	9.34	32.8	9.38	33.6	9.46	34.4	9.55

3TW60652-3(1)

NOTES - ANMERKUNGEN - Σημειώσεις - NOTAS - REMARQUES - NOTE - OPMERKINGEN - примечания - NOTLAR

1 The above table shows the average value of conditions which may occur.
Die obige Tabelle zeigt den Durchschnittswert der Bedingungen, die auftreten können.
Στον παραπάνω πίνακα αναγράφεται η μέση τιμή για συνθήκες που μπορεί να προκύψουν.
La tabla de arriba muestra el valor medio de condiciones que pueden ocurrir.
Le tableau ci-dessus donne la valeur moyenne pour des conditions qui peuvent survenir.
La tabella in alto mostra il valore delle condizioni medie che si possono riscontrare.
De tabel hierboven geeft de gemiddelde waarde aan van situaties die kunnen voorvallen.
Таблица расположенная выше показывает среднее значение условий, которые могут наступить.
Yukarıdaki tablo meydana gelebilecek koşulların ortalama değerini göstermektedir.

5 Capacity tables

5 - 1 Cooling Capacity Tables

REYAQ12P

TC: Total Capacity: kW ; PI: Power Input: kW (compressor + outdoor fan motor)

Combination (%)	Capacity index (kW)	Outdoor air temp. (°CDB)	Indoor air temperature: 14.0 °CWB / 20.0 °CDB		16.0 °CWB / 23.0 °CDB		18.0 °CWB / 26.0 °CDB		19.0 °CWB / 27.0 °CDB		20.0 °CWB / 28.0 °CDB		22.0 °CWB / 30.0 °CDB		24.0 °CWB / 32.0 °CDB	
			TC	PI	TC	PI	TC	PI	TC	PI	TC	PI	TC	PI	TC	PI
			kW	kW	kW	kW	kW	kW	kW	kW	kW	kW	kW	kW	kW	kW
90	270	10	20.3	2.69	24.3	3.24	28.2	3.83	30.2	4.13	32.1	4.44	36.0	5.07	40.0	5.72
	(30.15)	12	20.3	2.74	24.3	3.30	28.2	3.90	30.2	4.21	32.1	4.53	36.0	5.17	40.0	5.83
		14	20.3	2.78	24.3	3.36	28.2	3.97	30.2	4.29	32.1	4.61	36.0	5.27	40.0	5.94
		16	20.3	2.83	24.3	3.42	28.2	4.05	30.2	4.37	32.1	4.70	36.0	5.37	39.9	6.04
		18	20.3	2.88	24.3	3.49	28.2	4.13	30.2	4.46	32.1	4.79	36.0	5.48	39.3	6.22
		20	20.3	2.94	24.3	3.56	28.2	4.21	30.2	4.55	32.1	4.97	36.0	5.89	38.8	6.53
		21	20.3	2.96	24.3	3.59	28.2	4.28	30.2	4.71	32.1	5.15	36.0	6.10	38.5	6.68
		23	20.3	3.02	24.3	3.74	28.2	4.58	30.2	5.04	32.1	5.52	36.0	6.54	38.0	6.98
		25	20.3	3.18	24.3	3.99	28.2	4.90	30.2	5.39	32.1	5.90	36.0	7.00	37.4	7.29
		27	20.3	3.39	24.3	4.26	28.2	5.23	30.2	5.76	32.1	6.31	36.0	7.49	36.9	7.60
		29	20.3	3.60	24.3	4.54	28.2	5.58	30.2	6.15	32.1	6.74	35.6	7.84	36.3	7.90
		31	20.3	3.83	24.3	4.83	28.2	5.95	30.2	6.56	32.1	7.19	35.1	8.15	35.8	8.21
		33	20.3	4.07	24.3	5.14	28.2	6.34	30.2	6.99	32.1	7.67	34.5	8.46	35.3	8.52
		35	20.3	4.32	24.3	5.47	28.2	6.75	30.2	7.45	32.1	8.18	34.0	8.76	34.7	8.83
		37	20.3	4.58	24.3	5.81	28.2	7.19	30.2	7.93	32.1	8.72	33.4	9.07	34.2	9.15
		39	20.3	4.86	24.3	6.18	28.2	7.65	30.2	8.45	32.1	9.29	32.9	9.39	33.6	9.46
80	240	10	18.1	2.39	21.6	2.86	25.1	3.36	26.8	3.62	28.5	3.88	32.0	4.43	35.5	4.99
	(26.80)	12	18.1	2.43	21.6	2.91	25.1	3.42	26.8	3.68	28.5	3.96	32.0	4.51	35.5	5.08
		14	18.1	2.47	21.6	2.96	25.1	3.48	26.8	3.75	28.5	4.03	32.0	4.60	35.5	5.18
		16	18.1	2.51	21.6	3.01	25.1	3.55	26.8	3.82	28.5	4.11	32.0	4.69	35.5	5.28
		18	18.1	2.55	21.6	3.07	25.1	3.61	26.8	3.90	28.5	4.19	32.0	4.78	35.5	5.39
		20	18.1	2.60	21.6	3.13	25.1	3.68	26.8	3.97	28.5	4.27	32.0	4.95	35.5	5.76
		21	18.1	2.62	21.6	3.15	25.1	3.72	26.8	4.01	28.5	4.36	32.0	5.13	35.5	5.97
		23	18.1	2.67	21.6	3.22	25.1	3.90	26.8	4.27	28.5	4.66	32.0	5.50	35.5	6.40
		25	18.1	2.76	21.6	3.42	25.1	4.17	26.8	4.57	28.5	4.99	32.0	5.88	35.5	6.85
		27	18.1	2.93	21.6	3.65	25.1	4.45	26.8	4.88	28.5	5.33	32.0	6.29	35.5	7.33
		29	18.1	3.11	21.6	3.88	25.1	4.74	26.8	5.20	28.5	5.68	32.0	6.72	35.5	7.84
		31	18.1	3.31	21.6	4.13	25.1	5.05	26.8	5.54	28.5	6.06	32.0	7.17	35.0	8.14
		33	18.1	3.51	21.6	4.39	25.1	5.37	26.8	5.90	28.5	6.46	32.0	7.64	34.4	8.45
		35	18.1	3.72	21.6	4.66	25.1	5.71	26.8	6.28	28.5	6.88	32.0	8.15	33.9	8.76
		37	18.1	3.94	21.6	4.95	25.1	6.08	26.8	6.68	28.5	7.32	32.0	8.68	33.3	9.06
		39	18.1	4.18	21.6	5.26	25.1	6.46	26.8	7.11	28.5	7.79	32.0	9.25	32.8	9.38
70	210	10	15.8	2.10	18.9	2.49	21.9	2.91	23.5	3.13	25.0	3.35	28.0	3.80	31.1	4.28
	(23.45)	12	15.8	2.13	18.9	2.53	21.9	2.96	23.5	3.18	25.0	3.41	28.0	3.87	31.1	4.36
		14	15.8	2.16	18.9	2.57	21.9	3.01	23.5	3.24	25.0	3.47	28.0	3.95	31.1	4.44
		16	15.8	2.20	18.9	2.62	21.9	3.07	23.5	3.30	25.0	3.53	28.0	4.02	31.1	4.53
		18	15.8	2.24	18.9	2.67	21.9	3.12	23.5	3.36	25.0	3.60	28.0	4.10	31.1	4.62
		20	15.8	2.27	18.9	2.71	21.9	3.18	23.5	3.42	25.0	3.67	28.0	4.18	31.1	4.74
		21	15.8	2.29	18.9	2.74	21.9	3.21	23.5	3.46	25.0	3.71	28.0	4.25	31.1	4.91
		23	15.8	2.33	18.9	2.79	21.9	3.28	23.5	3.57	25.0	3.88	28.0	4.55	31.1	5.26
		25	15.8	2.37	18.9	2.90	21.9	3.50	23.5	3.81	25.0	4.15	28.0	4.86	31.1	5.63
		27	15.8	2.51	18.9	3.09	21.9	3.72	23.5	4.07	25.0	4.43	28.0	5.19	31.1	6.02
		29	15.8	2.66	18.9	3.28	21.9	3.96	23.5	4.33	25.0	4.72	28.0	5.54	31.1	6.42
		31	15.8	2.82	18.9	3.48	21.9	4.22	23.5	4.61	25.0	5.02	28.0	5.90	31.1	6.85
		33	15.8	2.99	18.9	3.70	21.9	4.48	23.5	4.91	25.0	5.35	28.0	6.29	31.1	7.31
		35	15.8	3.17	18.9	3.92	21.9	4.76	23.5	5.22	25.0	5.69	28.0	6.70	31.1	7.79
		37	15.8	3.36	18.9	4.16	21.9	5.06	23.5	5.54	25.0	6.05	28.0	7.13	31.1	8.30
		39	15.8	3.55	18.9	4.41	21.9	5.37	23.5	5.89	25.0	6.43	28.0	7.59	31.1	8.84
60	180	10	13.6	1.83	16.2	2.14	18.8	2.48	20.1	2.66	21.4	2.84	24.0	3.21	26.6	3.59
	(20.10)	12	13.6	1.85	16.2	2.18	18.8	2.52	20.1	2.70	21.4	2.88	24.0	3.26	26.6	3.66
		14	13.6	1.88	16.2	2.21	18.8	2.56	20.1	2.75	21.4	2.94	24.0	3.32	26.6	3.73
		16	13.6	1.91	16.2	2.25	18.8	2.61	20.1	2.80	21.4	2.99	24.0	3.39	26.6	3.80
		18	13.6	1.94	16.2	2.28	18.8	2.65	20.1	2.85	21.4	3.04	24.0	3.45	26.6	3.87
		20	13.6	1.97	16.2	2.32	18.8	2.70	20.1	2.90	21.4	3.10	24.0	3.52	26.6	3.95
		21	13.6	1.98	16.2	2.34	18.8	2.73	20.1	2.92	21.4	3.13	24.0	3.55	26.6	3.99
		23	13.6	2.01	16.2	2.38	18.8	2.78	20.1	2.98	21.4	3.19	24.0	3.69	26.6	4.24
		25	13.6	2.05	16.2	2.43	18.8	2.88	20.1	3.13	21.4	3.39	24.0	3.94	26.6	4.53
		27	13.6	2.12	16.2	2.57	18.8	3.07	20.1	3.33	21.4	3.61	24.0	4.20	26.6	4.83
		29	13.6	2.25	16.2	2.73	18.8	3.26	20.1	3.55	21.4	3.84	24.0	4.47	26.6	5.15
		31	13.6	2.38	16.2	2.90	18.8	3.47	20.1	3.77	21.4	4.09	24.0	4.76	26.6	5.49
		33	13.6	2.52	16.2	3.07	18.8	3.68	20.1	4.00	21.4	4.34	24.0	5.07	26.6	5.85
		35	13.6	2.66	16.2	3.25	18.8	3.90	20.1	4.25	21.4	4.62	24.0	5.39	26.6	6.23
		37	13.6	2.82	16.2	3.44	18.8	4.14	20.1	4.51	21.4	4.90	24.0	5.73	26.6	6.62
		39	13.6	2.97	16.2	3.65	18.8	4.39	20.1	4.79	21.4	5.20	24.0	6.09	26.6	7.05
50	150	10	11.3	1.57	13.5	1.82	15.7	2.08	16.8	2.22	17.8	2.36	20.0	2.64	22.2	2.95
	(16.75)	12	11.3	1.59	13.5	1.84	15.7	2.11	16.8	2.25	17.8	2.39	20.0	2.69	22.2	3.00
		14	11.3	1.61	13.5	1.87	15.7	2.14	16.8	2.29	17.8	2.43	20.0	2.74	22.2	3.05
		16	11.3	1.63	13.5	1.90	15.7	2.18	16.8	2.32	17.8	2.47	20.0	2.78	22.2	3.11
		18	11.3	1.66	13.5	1.93	15.7	2.21	16.8	2.36	17.8	2.52	20.0	2.83	22.2	3.16
		20	11.3	1.68	13.5	1.96	15.7	2.25	16.8	2.40	17.8	2.56	20.0	2.89	22.2	3.22
		21	11.3	1.69	13.5	1.97	15.7	2.27	16.8	2.42	17.8	2.58	20.0	2.91	22.2	3.25
		23	11.3	1.72	13.5	2.00	15.7	2.31	16.8	2.47	17.8	2.63	20.0	2.97	22.2	3.33
		25	11.3	1.74	13.5	2.04	15.7	2.35	16.8	2.52	17.8	2.71	20.0	3.12	22.2	3.55
		27	11.3	1.77	13.5	2.11	15.7	2.48	16.8	2.68	17.8	2.88	20.0	3.32	22.2	3.78
		29	11.3	1.87	13.5	2.24	15.7	2.63	16.8	2.84	17.8	3.06	20.0	3.53	22.2	4.03
		31	11.3	1.98	13.5	2.37	15.7	2.79	16.8	3.02	17.8	3.25	20.0	3.75	22.2	4.29
		33	11.3	2.09	13.5	2.50	15.7	2.96	16.8	3.20	17.8	3.45	20.0	3.98	22.2	4.56
		35	11.3	2.21	13.5	2.65	15.7	3.13	16.8	3.39	17.8	3.66	20.0	4.23	22.2	4.84
		37	11.3	2.33	13.5	2.80	15.7	3.31	16.8	3.59	17.8	3.88	20.0	4.49	22.2	5.14
		39	11.3	2.45	13.5	2.95	15.7	3.51	16.8	3.80	17.8	4.11	20.0	4.76	22.2	5.46

3TW60652-3(2)

5 Capacity tables

5 - 1 Cooling Capacity Tables

REYAQ14P

TC: Total Capacity: kW ; PI: Power Input: kW (compressor + outdoor fan motor)

Combination (%)	Capacity index (kW)	Outdoor air temp. (°CDB)	Indoor air temperature: 14.0 °CWB 20.0 °CDB TC kW	14.0 °CWB 20.0 °CDB PI kW	16.0 °CWB 23.0 °CDB TC kW	16.0 °CWB 23.0 °CDB PI kW	18.0 °CWB 26.0 °CDB TC kW	18.0 °CWB 26.0 °CDB PI kW	19.0 °CWB 27.0 °CDB TC kW	19.0 °CWB 27.0 °CDB PI kW	20.0 °CWB 28.0 °CDB TC kW	20.0 °CWB 28.0 °CDB PI kW	22.0 °CWB 30.0 °CDB TC kW	22.0 °CWB 30.0 °CDB PI kW	24.0 °CWB 32.0 °CDB TC kW	24.0 °CWB 32.0 °CDB PI kW
130	455 (52.00)	10	35.1	5.25	41.9	6.43	48.6	7.64	52.0	7.64	53.0	7.64	54.3	7.64	55.6	7.64
		12	35.1	5.35	41.9	6.55	48.6	7.79	51.7	7.79	52.4	7.79	53.6	7.79	54.9	7.79
		14	35.1	5.45	41.9	6.67	48.6	7.94	51.0	7.94	51.7	7.94	52.9	7.94	54.2	7.94
		16	35.1	5.55	41.9	6.80	48.6	8.09	50.4	7.97	51.0	7.97	52.3	7.93	53.5	7.91
		18	35.1	5.66	41.9	6.94	48.6	8.61	49.7	8.79	50.3	8.83	51.6	8.91	52.8	8.99
		20	35.1	5.77	41.9	7.39	48.4	9.17	49.0	9.22	49.6	9.26	50.9	9.34	52.2	9.43
		21	35.1	5.94	41.9	7.65	48.0	9.39	48.7	9.43	49.3	9.47	50.6	9.56	51.8	9.65
		23	35.1	6.35	41.9	8.21	47.3	9.81	48.0	9.86	48.6	9.91	49.9	10.00	51.1	10.1
		25	35.1	6.80	41.9	8.79	46.7	10.2	47.3	10.3	47.9	10.3	49.2	10.4	50.5	10.5
		27	35.1	7.26	41.9	9.40	46.0	10.7	46.6	10.7	47.2	10.8	48.5	10.9	49.8	11.0
		29	35.1	7.75	41.9	10.0	45.3	11.1	45.9	11.2	46.6	11.2	47.8	11.3	49.1	11.4
		31	35.1	8.26	41.9	10.7	44.6	11.5	45.2	11.6	45.9	11.7	47.1	11.8	48.4	11.9
		33	35.1	8.81	41.9	11.5	43.9	12.0	44.6	12.0	45.2	12.1	46.5	12.2	47.7	12.3
		35	35.1	9.38	41.9	12.2	43.2	12.4	43.9	12.5	44.5	12.5	45.8	12.7	47.0	12.8
		37	35.1	9.99	41.3	12.7	42.6	12.8	43.2	12.9	43.8	13.0	45.1	13.1	46.4	13.3
		39	35.1	10.6	40.6	13.1	41.9	13.3	42.5	13.4	43.1	13.4	44.4	13.6	45.7	13.7
120	420 (48.00)	10	32.4	4.80	38.6	5.86	44.9	6.97	48.0	7.53	51.1	7.53	53.4	7.53	54.6	7.53
		12	32.4	4.88	38.6	5.97	44.9	7.10	48.0	7.67	51.1	7.67	52.7	7.67	53.9	7.67
		14	32.4	4.97	38.6	6.08	44.9	7.23	48.0	7.82	50.9	7.82	52.0	7.82	53.2	7.82
		16	32.4	5.07	38.6	6.20	44.9	7.38	48.0	7.97	50.2	7.97	51.4	7.93	52.5	7.91
		18	32.4	5.17	38.6	6.32	44.9	7.63	48.0	8.44	49.5	8.78	50.7	8.85	51.9	8.92
		20	32.4	5.27	38.6	6.57	44.9	8.20	48.0	9.08	48.8	9.20	50.0	9.28	51.2	9.36
		21	32.4	5.32	38.6	6.81	44.9	8.50	47.9	9.38	48.5	9.42	49.7	9.50	50.8	9.58
		23	32.4	5.68	38.6	7.29	44.9	9.11	47.2	9.80	47.8	9.85	49.0	9.93	50.1	10.0
		25	32.4	6.07	38.6	7.81	44.9	9.76	46.5	10.2	47.1	10.3	48.3	10.4	49.5	10.5
		27	32.4	6.48	38.6	8.35	44.9	10.4	45.9	10.7	46.4	10.7	47.6	10.8	48.8	10.9
		29	32.4	6.91	38.6	8.91	44.6	11.0	45.2	11.1	45.8	11.1	46.9	11.2	48.1	11.4
		31	32.4	7.37	38.6	9.51	43.9	11.5	44.5	11.5	45.1	11.6	46.2	11.7	47.4	11.8
		33	32.4	7.85	38.6	10.1	43.2	11.9	43.8	12.0	44.4	12.0	45.6	12.1	46.7	12.2
		35	32.4	8.36	38.6	10.8	42.5	12.3	43.1	12.4	43.7	12.5	44.9	12.6	46.0	12.7
		37	32.4	8.89	38.6	11.5	41.9	12.8	42.4	12.8	43.0	12.9	44.2	13.0	45.4	13.2
		39	32.4	9.46	38.6	12.3	41.2	13.2	41.8	13.3	42.3	13.3	43.5	13.5	44.7	13.6
110	385 (44.00)	10	29.7	4.36	35.4	5.30	41.1	6.30	44.0	6.81	46.9	7.32	52.5	7.49	53.6	7.49
		12	29.7	4.43	35.4	5.40	41.1	6.42	44.0	6.94	46.9	7.46	51.8	7.64	52.9	7.64
		14	29.7	4.51	35.4	5.50	41.1	6.54	44.0	7.07	46.9	7.61	51.2	7.78	52.2	7.78
		16	29.7	4.60	35.4	5.61	41.1	6.67	44.0	7.21	46.9	7.75	50.5	7.93	51.5	7.91
		18	29.7	4.69	35.4	5.72	41.1	6.80	44.0	7.41	46.9	8.14	49.8	8.79	50.9	8.86
		20	29.7	4.78	35.4	5.83	41.1	7.20	44.0	7.96	46.9	8.75	49.1	9.22	50.2	9.29
		21	29.7	4.82	35.4	6.01	41.1	7.46	44.0	8.25	46.9	9.07	48.8	9.44	49.8	9.51
		23	29.7	5.05	35.4	6.44	41.1	8.00	44.0	8.84	46.9	9.73	48.1	9.87	49.2	9.95
		25	29.7	5.39	35.4	6.88	41.1	8.56	44.0	9.47	46.3	10.2	47.4	10.3	48.5	10.4
		27	29.7	5.75	35.4	7.35	41.1	9.16	44.0	10.1	45.6	10.6	46.7	10.7	47.8	10.8
		29	29.7	6.13	35.4	7.85	41.1	9.79	44.0	10.8	45.0	11.1	46.0	11.2	47.1	11.3
		31	29.7	6.53	35.4	8.37	41.1	10.5	43.7	11.5	44.3	11.5	45.3	11.6	46.4	11.7
		33	29.7	6.95	35.4	8.92	41.1	11.2	43.1	11.9	43.6	11.9	44.7	12.0	45.7	12.2
		35	29.7	7.39	35.4	9.51	41.1	11.9	42.4	12.3	42.9	12.4	44.0	12.5	45.1	12.6
		37	29.7	7.86	35.4	10.1	41.1	12.7	41.7	12.8	42.2	12.8	43.3	12.9	44.4	13.0
		39	29.7	8.36	35.4	10.8	40.5	13.1	41.0	13.2	41.5	13.3	42.6	13.4	43.7	13.5
100	350 (40.00)	10	27.0	3.93	32.2	4.76	37.4	5.64	40.0	6.10	42.6	6.56	47.8	7.49	52.6	7.49
		12	27.0	4.00	32.2	4.85	37.4	5.75	40.0	6.21	42.6	6.68	47.8	7.64	51.9	7.64
		14	27.0	4.07	32.2	4.94	37.4	5.86	40.0	6.33	42.6	6.81	47.8	7.78	51.2	7.78
		16	27.0	4.14	32.2	5.03	37.4	5.97	40.0	6.45	42.6	6.94	47.8	7.93	50.6	7.91
		18	27.0	4.22	32.2	5.13	37.4	6.09	40.0	6.58	42.6	7.08	47.8	8.39	49.9	8.80
		20	27.0	4.30	32.2	5.23	37.4	6.27	40.0	6.91	42.6	7.59	47.8	9.02	49.2	9.23
		21	27.0	4.34	32.2	5.28	37.4	6.50	40.0	7.16	42.6	7.86	47.8	9.35	48.8	9.44
		23	27.0	4.46	32.2	5.64	37.4	6.96	40.0	7.67	42.6	8.43	47.2	9.80	48.2	9.87
		25	27.0	4.75	32.2	6.02	37.4	7.44	40.0	8.21	42.6	9.02	46.5	10.2	47.5	10.3
		27	27.0	5.07	32.2	6.43	37.4	7.96	40.0	8.78	42.6	9.65	45.8	10.7	46.8	10.7
		29	27.0	5.40	32.2	6.86	37.4	8.50	40.0	9.38	42.6	10.3	45.1	11.1	46.1	11.2
		31	27.0	5.74	32.2	7.31	37.4	9.07	40.0	10.0	42.6	11.0	44.5	11.5	45.4	11.6
		33	27.0	6.11	32.2	7.78	37.4	9.67	40.0	10.7	42.6	11.8	43.8	12.0	44.7	12.1
		35	27.0	6.49	32.2	8.28	37.4	10.3	40.0	11.4	42.1	12.3	43.1	12.4	44.1	12.5
		37	27.0	6.89	32.2	8.82	37.4	11.0	40.0	12.2	41.4	12.7	42.4	12.8	43.4	12.9
		39	27.0	7.32	32.2	9.38	37.4	11.7	40.0	13.0	40.7	13.2	41.7	13.3	42.7	13.4

3TW60652-3(1)

NOTES - ANMERKUNGEN - Σημειώσεις - NOTAS - REMARQUES - NOTE - OPMERKINGEN - примечания - NOTLAR

1 The above table shows the average value of conditions which may occur.
Die obige Tabelle zeigt den Durchschnittswert der Bedingungen, die auftreten können.
Στον παραπάνω πίνακα αναγράφεται η μέση τιμή για συνθήκες που μπορεί να προκύψουν.
La tabla de arriba muestra el valor medio de condiciones que pueden ocurrir.
Le tableau ci-dessus donne la valeur moyenne pour des conditions qui peuvent survenir.
La tabella in alto mostra il valore delle condizioni medie che si possono riscontrare.
De tabel hierboven geeft de gemiddelde waarde aan van situaties die kunnen voorvallen.
Таблица расположенная выше показывает среднее значение условий, которые могут наступить.
Yukarıdaki tablo meydana gelebilecek koşulların ortalama değerini göstermektedir.

5 Capacity tables

5 - 1 Cooling Capacity Tables

REYAQ14P

TC: Total Capacity: kW ; PI: Power Input: kW (compressor + outdoor fan motor)

Combination (%)	Capacity index (kW)	Outdoor air temp. (°CDB)	Indoor air temperature: 14.0 °CWB / 20.0 °CDB		16.0 °CWB / 23.0 °CDB		18.0 °CWB / 26.0 °CDB		19.0 °CWB / 27.0 °CDB		20.0 °CWB / 28.0 °CDB		22.0 °CWB / 30.0 °CDB		24.0 °CWB / 32.0 °CDB	
			TC	PI	TC	PI	TC	PI	TC	PI	TC	PI	TC	PI	TC	PI
			kW	kW	kW	kW	kW	kW	kW	kW	kW	kW	kW	kW	kW	kW
90	315	10	24.3	3.52	29.0	4.24	33.7	5.01	36.0	5.40	38.3	5.81	43.0	6.63	47.7	7.48
	(36.00)	12	24.3	3.58	29.0	4.32	33.7	5.10	36.0	5.50	38.3	5.92	43.0	6.76	47.7	7.62
		14	24.3	3.64	29.0	4.39	33.7	5.19	36.0	5.61	38.3	6.03	43.0	6.89	47.7	7.76
		16	24.3	3.70	29.0	4.48	33.7	5.29	36.0	5.72	38.3	6.15	43.0	7.02	47.7	7.91
		18	24.3	3.77	29.0	4.56	33.7	5.40	36.0	5.83	38.3	6.27	43.0	7.16	47.7	8.37
		20	24.3	3.84	29.0	4.65	33.7	5.50	36.0	5.95	38.3	6.50	43.0	7.70	47.7	9.00
		21	24.3	3.87	29.0	4.69	33.7	5.60	36.0	6.15	38.3	6.73	43.0	7.97	47.7	9.32
		23	24.3	3.95	29.0	4.89	33.7	5.99	36.0	6.59	38.3	7.21	43.0	8.55	47.2	9.80
		25	24.3	4.16	29.0	5.22	33.7	6.41	36.0	7.05	38.3	7.72	43.0	9.16	46.5	10.2
		27	24.3	4.43	29.0	5.57	33.7	6.84	36.0	7.53	38.3	8.25	43.0	9.80	45.8	10.7
		29	24.3	4.71	29.0	5.93	33.7	7.30	36.0	8.04	38.3	8.81	43.0	10.5	45.1	11.1
		31	24.3	5.01	29.0	6.31	33.7	7.78	36.0	8.57	38.3	9.41	43.0	11.2	44.4	11.5
		33	24.3	5.32	29.0	6.72	33.7	8.29	36.0	9.14	38.3	10.0	42.9	11.9	43.8	12.0
		35	24.3	5.65	29.0	7.15	33.7	8.83	36.0	9.74	38.3	10.7	42.2	12.3	43.1	12.4
		37	24.3	5.99	29.0	7.60	33.7	9.40	36.0	10.4	38.3	11.4	41.5	12.7	42.4	12.8
		39	24.3	6.36	29.0	8.07	33.7	10.0	36.0	11.0	38.3	12.1	40.8	13.2	41.7	13.3
80	280	10	21.6	3.12	25.8	3.74	29.9	4.39	32.0	4.73	34.1	5.08	38.2	5.79	42.4	6.52
	(32.00)	12	21.6	3.17	25.8	3.80	29.9	4.47	32.0	4.82	34.1	5.17	38.2	5.90	42.4	6.65
		14	21.6	3.22	25.8	3.87	29.9	4.55	32.0	4.91	34.1	5.27	38.2	6.01	42.4	6.77
		16	21.6	3.28	25.8	3.94	29.9	4.64	32.0	5.00	34.1	5.37	38.2	6.13	42.4	6.91
		18	21.6	3.34	25.8	4.01	29.9	4.73	32.0	5.10	34.1	5.47	38.2	6.25	42.4	7.04
		20	21.6	3.39	25.8	4.09	29.9	4.82	32.0	5.20	34.1	5.58	38.2	6.48	42.4	7.53
		21	21.6	3.43	25.8	4.12	29.9	4.86	32.0	5.25	34.1	5.70	38.2	6.71	42.4	7.80
		23	21.6	3.49	25.8	4.20	29.9	5.10	32.0	5.59	34.1	6.10	38.2	7.19	42.4	8.37
		25	21.6	3.60	25.8	4.48	29.9	5.45	32.0	5.97	34.1	6.52	38.2	7.69	42.4	8.96
		27	21.6	3.83	25.8	4.77	29.9	5.81	32.0	6.37	34.1	6.96	38.2	8.22	42.4	9.59
		29	21.6	4.07	25.8	5.08	29.9	6.19	32.0	6.80	34.1	7.43	38.2	8.78	42.4	10.2
		31	21.6	4.32	25.8	5.40	29.9	6.60	32.0	7.24	34.1	7.92	38.2	9.37	42.4	10.9
		33	21.6	4.59	25.8	5.74	29.9	7.02	32.0	7.71	34.1	8.44	38.2	9.99	42.4	11.7
		35	21.6	4.86	25.8	6.10	29.9	7.47	32.0	8.21	34.1	8.99	38.2	10.7	42.1	12.3
		37	21.6	5.16	25.8	6.47	29.9	7.94	32.0	8.74	34.1	9.57	38.2	11.4	41.4	12.7
		39	21.6	5.46	25.8	6.87	29.9	8.45	32.0	9.29	34.1	10.2	38.2	12.1	40.7	13.2
70	245	10	18.9	2.74	22.5	3.26	26.2	3.80	28.0	4.09	29.8	4.38	33.5	4.97	37.1	5.59
	(28.00)	12	18.9	2.79	22.5	3.31	26.2	3.87	28.0	4.16	29.8	4.45	33.5	5.07	37.1	5.70
		14	18.9	2.83	22.5	3.37	26.2	3.94	28.0	4.23	29.8	4.54	33.5	5.16	37.1	5.81
		16	18.9	2.88	22.5	3.42	26.2	4.01	28.0	4.31	29.8	4.62	33.5	5.26	37.1	5.92
		18	18.9	2.92	22.5	3.48	26.2	4.08	28.0	4.39	29.8	4.71	33.5	5.36	37.1	6.03
		20	18.9	2.97	22.5	3.55	26.2	4.16	28.0	4.48	29.8	4.80	33.5	5.47	37.1	6.20
		21	18.9	3.00	22.5	3.58	26.2	4.20	28.0	4.52	29.8	4.85	33.5	5.55	37.1	6.42
		23	18.9	3.05	22.5	3.65	26.2	4.28	28.0	4.67	29.8	5.08	33.5	5.94	37.1	6.88
		25	18.9	3.10	22.5	3.79	26.2	4.57	28.0	4.99	29.8	5.42	33.5	6.35	37.1	7.36
		27	18.9	3.28	22.5	4.03	26.2	4.87	28.0	5.32	29.8	5.79	33.5	6.78	37.1	7.87
		29	18.9	3.48	22.5	4.29	26.2	5.18	28.0	5.66	29.8	6.17	33.5	7.24	37.1	8.40
		31	18.9	3.69	22.5	4.56	26.2	5.51	28.0	6.03	29.8	6.57	33.5	7.72	37.1	8.96
		33	18.9	3.91	22.5	4.84	26.2	5.86	28.0	6.41	29.8	6.99	33.5	8.22	37.1	9.56
		35	18.9	4.14	22.5	5.13	26.2	6.23	28.0	6.82	29.8	7.44	33.5	8.75	37.1	10.2
		37	18.9	4.39	22.5	5.44	26.2	6.61	28.0	7.25	29.8	7.91	33.5	9.32	37.1	10.9
		39	18.9	4.64	22.5	5.77	26.2	7.02	28.0	7.70	29.8	8.41	33.5	9.92	37.1	11.6
60	210	10	16.2	2.39	19.3	2.80	22.4	3.24	24.0	3.47	25.6	3.71	28.7	4.19	31.8	4.70
	(24.00)	12	16.2	2.42	19.3	2.85	22.4	3.30	24.0	3.53	25.6	3.77	28.7	4.27	31.8	4.78
		14	16.2	2.46	19.3	2.89	22.4	3.35	24.0	3.59	25.6	3.84	28.7	4.35	31.8	4.87
		16	16.2	2.49	19.3	2.94	22.4	3.41	24.0	3.65	25.6	3.91	28.7	4.43	31.8	4.96
		18	16.2	2.53	19.3	2.99	22.4	3.47	24.0	3.72	25.6	3.98	28.7	4.51	31.8	5.06
		20	16.2	2.57	19.3	3.04	22.4	3.53	24.0	3.79	25.6	4.05	28.7	4.60	31.8	5.16
		21	16.2	2.59	19.3	3.06	22.4	3.56	24.0	3.82	25.6	4.09	28.7	4.64	31.8	5.21
		23	16.2	2.63	19.3	3.12	22.4	3.63	24.0	3.90	25.6	4.17	28.7	4.82	31.8	5.54
		25	16.2	2.68	19.3	3.17	22.4	3.77	24.0	4.09	25.6	4.43	28.7	5.15	31.8	5.92
		27	16.2	2.78	19.3	3.36	22.4	4.01	24.0	4.36	25.6	4.72	28.7	5.49	31.8	6.32
		29	16.2	2.94	19.3	3.57	22.4	4.27	24.0	4.64	25.6	5.02	28.7	5.85	31.8	6.74
		31	16.2	3.11	19.3	3.79	22.4	4.53	24.0	4.93	25.6	5.34	28.7	6.23	31.8	7.18
		33	16.2	3.29	19.3	4.01	22.4	4.81	24.0	5.24	25.6	5.68	28.7	6.63	31.8	7.65
		35	16.2	3.48	19.3	4.25	22.4	5.10	24.0	5.56	25.6	6.03	28.7	7.05	31.8	8.14
		37	16.2	3.68	19.3	4.50	22.4	5.41	24.0	5.90	25.6	6.41	28.7	7.49	31.8	8.66
		39	16.2	3.89	19.3	4.77	22.4	5.74	24.0	6.26	25.6	6.80	28.7	7.96	31.8	9.21
50	175	10	13.5	2.05	16.1	2.37	18.7	2.72	20.0	2.90	21.3	3.08	23.9	3.46	26.5	3.85
	(20.00)	12	13.5	2.08	16.1	2.41	18.7	2.76	20.0	2.94	21.3	3.13	23.9	3.52	26.5	3.92
		14	13.5	2.11	16.1	2.44	18.7	2.80	20.0	2.99	21.3	3.18	23.9	3.58	26.5	3.99
		16	13.5	2.13	16.1	2.48	18.7	2.85	20.0	3.04	21.3	3.23	23.9	3.64	26.5	4.06
		18	13.5	2.16	16.1	2.52	18.7	2.89	20.0	3.09	21.3	3.29	23.9	3.70	26.5	4.14
		20	13.5	2.20	16.1	2.56	18.7	2.94	20.0	3.14	21.3	3.35	23.9	3.77	26.5	4.21
		21	13.5	2.21	16.1	2.58	18.7	2.97	20.0	3.17	21.3	3.38	23.9	3.81	26.5	4.25
		23	13.5	2.24	16.1	2.62	18.7	3.02	20.0	3.23	21.3	3.44	23.9	3.88	26.5	4.35
		25	13.5	2.28	16.1	2.66	18.7	3.07	20.0	3.29	21.3	3.54	23.9	4.07	26.5	4.64
		27	13.5	2.32	16.1	2.76	18.7	3.24	20.0	3.50	21.3	3.77	23.9	4.34	26.5	4.95
		29	13.5	2.45	16.1	2.92	18.7	3.44	20.0	3.72	21.3	4.00	23.9	4.61	26.5	5.27
		31	13.5	2.59	16.1	3.09	18.7	3.65	20.0	3.94	21.3	4.25	23.9	4.90	26.5	5.60
		33	13.5	2.73	16.1	3.27	18.7	3.87	20.0	4.18	21.3	4.51	23.9	5.21	26.5	5.96
		35	13.5	2.88	16.1	3.46	18.7	4.09	20.0	4.43	21.3	4.78	23.9	5.53	26.5	6.33
		37	13.5	3.04	16.1	3.66	18.7	4.33	20.0	4.69	21.3	5.07	23.9	5.87	26.5	6.72
		39	13.5	3.21	16.1	3.86	18.7	4.58	20.0	4.97	21.3	5.37	23.9	6.22	26.5	7.14

3TW60652-3(2)

5 Capacity tables

5 - 1 Cooling Capacity Tables

REYAQ16P

TC: Total Capacity: kW ; PI: Power Input: kW (compressor + outdoor fan motor)

Combination (%)	Capacity index (kW)	Outdoor air temp. (°CDB)	Indoor air temperature: 14.0 °CWB 20.0 °CDB TC kW	14.0 °CWB 20.0 °CDB PI kW	16.0 °CWB 23.0 °CDB TC kW	16.0 °CWB 23.0 °CDB PI kW	18.0 °CWB 26.0 °CDB TC kW	18.0 °CWB 26.0 °CDB PI kW	19.0 °CWB 27.0 °CDB TC kW	19.0 °CWB 27.0 °CDB PI kW	20.0 °CWB 28.0 °CDB TC kW	20.0 °CWB 28.0 °CDB PI kW	22.0 °CWB 30.0 °CDB TC kW	22.0 °CWB 30.0 °CDB PI kW	24.0 °CWB 32.0 °CDB TC kW	24.0 °CWB 32.0 °CDB PI kW
130	520 (58.50)	10	39.5	6.49	47.1	7.95	54.7	9.45	58.5	9.45	59.7	9.45	61.1	9.45	62.6	9.45
		12	39.5	6.61	47.1	8.10	54.7	9.63	58.2	9.63	59.0	9.63	60.4	9.63	61.8	9.63
		14	39.5	6.74	47.1	8.25	54.7	9.82	57.5	9.82	58.2	9.82	59.6	9.82	61.0	9.82
		16	39.5	6.87	47.1	8.41	54.7	10.0	56.7	9.86	57.4	9.86	58.8	9.81	60.3	9.79
		18	39.5	7.00	47.1	8.58	54.7	10.7	55.9	10.9	56.6	10.9	58.1	11.0	59.5	11.1
		20	39.5	7.14	47.1	9.14	54.5	11.4	55.2	11.4	55.9	11.5	57.3	11.6	58.7	11.7
		21	39.5	7.34	47.1	9.47	54.1	11.6	54.8	11.7	55.5	11.7	56.9	11.8	58.3	12.0
		23	39.5	7.86	47.1	10.2	53.3	12.2	54.0	12.2	54.7	12.3	56.1	12.4	57.6	12.5
		25	39.5	8.40	47.1	10.9	52.5	12.7	53.2	12.7	54.0	12.8	55.4	12.9	56.8	13.1
		27	39.5	8.98	47.1	11.6	51.8	13.2	52.5	13.3	53.2	13.4	54.6	13.5	56.0	13.6
		29	39.5	9.58	47.1	12.4	51.0	13.8	51.7	13.8	52.4	13.9	53.8	14.0	55.3	14.2
		31	39.5	10.2	47.1	13.3	50.2	14.3	50.9	14.4	51.6	14.4	53.1	14.6	54.5	14.7
		33	39.5	10.9	47.1	14.2	49.5	14.8	50.2	14.9	50.9	15.0	52.3	15.1	53.7	15.3
		35	39.5	11.6	47.1	15.1	48.7	15.4	49.4	15.5	50.1	15.5	51.5	15.7	53.0	15.9
		37	39.5	12.4	46.5	15.7	47.9	15.9	48.6	16.0	49.3	16.1	50.8	16.3	52.2	16.4
		39	39.5	13.2	45.7	16.3	47.1	16.5	47.9	16.6	48.6	16.6	50.0	16.8	51.4	17.0
120	480 (54.00)	10	36.4	5.93	43.5	7.25	50.5	8.62	54.0	9.31	57.5	9.31	60.1	9.31	61.5	9.31
		12	36.4	6.04	43.5	7.38	50.5	8.78	54.0	9.49	57.5	9.49	59.4	9.49	60.7	9.49
		14	36.4	6.15	43.5	7.52	50.5	8.95	54.0	9.67	57.3	9.67	58.6	9.67	59.9	9.67
		16	36.4	6.27	43.5	7.67	50.5	9.12	54.0	9.86	56.5	9.86	57.8	9.81	59.1	9.79
		18	36.4	6.39	43.5	7.82	50.5	9.43	54.0	10.4	55.8	10.9	57.1	11.0	58.4	11.1
		20	36.4	6.52	43.5	8.13	50.5	10.1	54.0	11.2	55.0	11.4	56.3	11.5	57.6	11.6
		21	36.4	6.58	43.5	8.42	50.5	10.5	53.9	11.6	54.6	11.7	55.9	11.8	57.2	11.9
		23	36.4	7.03	43.5	9.02	50.5	11.3	53.2	12.1	53.8	12.2	55.1	12.3	56.5	12.4
		25	36.4	7.51	43.5	9.66	50.5	12.1	52.4	12.7	53.1	12.7	54.4	12.8	55.7	13.0
		27	36.4	8.02	43.5	10.3	50.5	12.9	51.6	13.2	52.3	13.3	53.6	13.4	54.9	13.5
		29	36.4	8.55	43.5	11.0	50.2	13.7	50.9	13.7	51.5	13.8	52.8	13.9	54.1	14.1
		31	36.4	9.12	43.5	11.8	49.4	14.2	50.1	14.3	50.8	14.3	52.1	14.5	53.4	14.6
		33	36.4	9.71	43.5	12.6	48.7	14.7	49.3	14.8	50.0	14.9	51.3	15.0	52.6	15.2
		35	36.4	10.3	43.5	13.4	47.9	15.3	48.6	15.4	49.2	15.4	50.5	15.6	51.8	15.7
		37	36.4	11.0	43.5	14.3	47.1	15.8	47.8	15.9	48.4	16.0	49.8	16.1	51.1	16.3
		39	36.4	11.7	43.5	15.2	46.4	16.4	47.0	16.4	47.7	16.5	49.0	16.7	50.3	16.9
110	440 (49.50)	10	33.4	5.39	39.8	6.56	46.3	7.79	49.5	8.42	52.7	9.06	59.1	9.27	60.3	9.27
		12	33.4	5.48	39.8	6.68	46.3	7.94	49.5	8.58	52.7	9.23	58.4	9.44	59.6	9.44
		14	33.4	5.58	39.8	6.81	46.3	8.09	49.5	8.74	52.7	9.41	57.6	9.63	58.8	9.63
		16	33.4	5.69	39.8	6.94	46.3	8.25	49.5	8.92	52.7	9.59	56.8	9.81	58.0	9.79
		18	33.4	5.80	39.8	7.08	46.3	8.41	49.5	9.16	52.7	10.1	56.1	10.9	57.3	11.0
		20	33.4	5.91	39.8	7.22	46.3	8.91	49.5	9.84	52.7	10.8	55.3	11.4	56.5	11.5
		21	33.4	5.97	39.8	7.44	46.3	9.23	49.5	10.2	52.7	11.2	54.9	11.7	56.1	11.8
		23	33.4	6.25	39.8	7.96	46.3	9.89	49.5	10.9	52.7	12.0	54.1	12.2	55.3	12.3
		25	33.4	6.67	39.8	8.51	46.3	10.6	49.5	11.7	52.2	12.7	53.4	12.8	54.6	12.9
		27	33.4	7.12	39.8	9.10	46.3	11.3	49.5	12.5	51.4	13.2	52.6	13.3	53.8	13.4
		29	33.4	7.58	39.8	9.71	46.3	12.1	49.5	13.4	50.6	13.7	51.8	13.8	53.0	14.0
		31	33.4	8.08	39.8	10.4	46.3	12.9	49.3	14.2	49.9	14.3	51.1	14.4	52.3	14.5
		33	33.4	8.60	39.8	11.0	46.3	13.8	48.5	14.7	49.1	14.8	50.3	14.9	51.5	15.1
		35	33.4	9.14	39.8	11.8	46.3	14.7	47.7	15.3	48.3	15.3	49.5	15.5	50.7	15.6
		37	33.4	9.72	39.8	12.5	46.3	15.7	46.9	15.8	47.5	15.9	48.8	16.0	50.0	16.2
		39	33.4	10.3	39.8	13.3	45.6	16.3	46.2	16.3	46.8	16.4	48.0	16.6	49.2	16.7
100	400 (45.00)	10	30.4	4.86	36.2	5.89	42.1	6.98	45.0	7.54	47.9	8.11	53.8	9.27	59.2	9.27
		12	30.4	4.94	36.2	6.00	42.1	7.11	45.0	7.68	47.9	8.26	53.8	9.44	58.5	9.44
		14	30.4	5.03	36.2	6.11	42.1	7.25	45.0	7.83	47.9	8.42	53.8	9.63	57.7	9.63
		16	30.4	5.12	36.2	6.23	42.1	7.39	45.0	7.98	47.9	8.59	53.8	9.81	56.9	9.79
		18	30.4	5.22	36.2	6.35	42.1	7.53	45.0	8.14	47.9	8.76	53.8	10.4	56.1	10.9
		20	30.4	5.32	36.2	6.47	42.1	7.76	45.0	8.55	47.9	9.38	53.8	11.2	55.4	11.4
		21	30.4	5.37	36.2	6.54	42.1	8.03	45.0	8.86	47.9	9.72	53.8	11.6	55.0	11.7
		23	30.4	5.51	36.2	6.97	42.1	8.61	45.0	9.49	47.9	10.4	53.1	12.1	54.2	12.2
		25	30.4	5.88	36.2	7.45	42.1	9.21	45.0	10.2	47.9	11.2	52.4	12.7	53.5	12.8
		27	30.4	6.27	36.2	7.95	42.1	9.84	45.0	10.9	47.9	11.9	51.6	13.2	52.7	13.3
		29	30.4	6.67	36.2	8.48	42.1	10.5	45.0	11.6	47.9	12.8	50.8	13.7	51.9	13.8
		31	30.4	7.10	36.2	9.04	42.1	11.2	45.0	12.4	47.9	13.6	50.1	14.3	51.1	14.4
		33	30.4	7.55	36.2	9.63	42.1	12.0	45.0	13.2	47.9	14.6	49.3	14.8	50.4	14.9
		35	30.4	8.03	36.2	10.2	42.1	12.7	45.0	14.1	47.4	15.2	48.5	15.4	49.6	15.5
		37	30.4	8.53	36.2	10.9	42.1	13.6	45.0	15.0	46.6	15.8	47.7	15.9	48.8	16.0
		39	30.4	9.06	36.2	11.6	42.1	14.5	45.0	16.0	45.9	16.3	47.0	16.4	48.1	16.6

3TW60652-3(1)

NOTES - ANMERKUNGEN - Σημειώσεις - NOTAS - REMARQUES - NOTE - OPMERKINGEN - примечания - NOTLAR

1 The above table shows the average value of conditions which may occur.
Die obige Tabelle zeigt den Durchschnittswert der Bedingungen, die auftreten können.
Στον παραπάνω πίνακα αναγράφεται η μέση τιμή για συνθήκες που μπορεί να προκύψουν.
La tabla de arriba muestra el valor medio de condiciones que pueden ocurrir.
Le tableau ci-dessus donne la valeur moyenne pour des conditions qui peuvent survenir.
La tabella in alto mostra il valore delle condizioni medie che si possono riscontrare.
De tabel hierboven geeft de gemiddelde waarde aan van situaties die kunnen voorvallen.
Таблица расположенная выше показывает среднее значение условий, которые могут наступить.
Yukarıdaki tablo meydana gelebilecek koşulların ortalama değerini göstermektedir.

5 Capacity tables

5 - 1 Cooling Capacity Tables

REYAQ16P

TC: Total Capacity: kW ; PI: Power Input: kW (compressor + outdoor fan motor)

Combination (%)	Capacity index (kW)	Outdoor air temp. (°CDB)	Indoor air temperature: 14.0 °CWB / 20.0 °CDB		16.0 °CWB / 23.0 °CDB		18.0 °CWB / 26.0 °CDB		19.0 °CWB / 27.0 °CDB		20.0 °CWB / 28.0 °CDB		22.0 °CWB / 30.0 °CDB		24.0 °CWB / 32.0 °CDB	
			TC	PI	TC	PI	TC	PI	TC	PI	TC	PI	TC	PI	TC	PI
			kW	kW	kW	kW	kW	kW	kW	kW	kW	kW	kW	kW	kW	kW
90	360	10	27.3	4.35	32.6	5.24	37.9	6.19	40.5	6.68	43.1	7.18	48.4	8.20	53.7	9.25
	(40.50)	12	27.3	4.42	32.6	5.34	37.9	6.31	40.5	6.81	43.1	7.32	48.4	8.36	53.7	9.42
		14	27.3	4.50	32.6	5.44	37.9	6.42	40.5	6.94	43.1	7.46	48.4	8.52	53.7	9.60
		16	27.3	4.58	32.6	5.54	37.9	6.55	40.5	7.07	43.1	7.60	48.4	8.69	53.7	9.79
		18	27.3	4.66	32.6	5.64	37.9	6.68	40.5	7.21	43.1	7.75	48.4	8.86	53.7	10.3
		20	27.3	4.75	32.6	5.75	37.9	6.81	40.5	7.35	43.1	8.04	48.4	9.52	53.7	11.1
		21	27.3	4.79	32.6	5.81	37.9	6.93	40.5	7.61	43.1	8.33	48.4	9.86	53.7	11.5
		23	27.3	4.88	32.6	6.05	37.9	7.41	40.5	8.15	43.1	8.92	48.4	10.6	53.1	12.1
		25	27.3	5.14	32.6	6.45	37.9	7.92	40.5	8.72	43.1	9.55	48.4	11.3	52.3	12.7
		27	27.3	5.47	32.6	6.88	37.9	8.46	40.5	9.31	43.1	10.2	48.4	12.1	51.6	13.2
		29	27.3	5.82	32.6	7.34	37.9	9.03	40.5	9.94	43.1	10.9	48.4	13.0	50.8	13.7
		31	27.3	6.19	32.6	7.81	37.9	9.62	40.5	10.6	43.1	11.6	48.4	13.8	50.0	14.3
		33	27.3	6.58	32.6	8.31	37.9	10.3	40.5	11.3	43.1	12.4	48.3	14.7	49.3	14.8
		35	27.3	6.98	32.6	8.84	37.9	10.9	40.5	12.0	43.1	13.2	47.5	15.2	48.5	15.4
		37	27.3	7.41	32.6	9.40	37.9	11.6	40.5	12.8	43.1	14.1	46.7	15.8	47.7	15.9
		39	27.3	7.86	32.6	9.99	37.9	12.4	40.5	13.7	43.1	15.0	46.0	16.3	47.0	16.4
80	320	10	24.3	3.86	29.0	4.62	33.7	5.43	36.0	5.85	38.3	6.28	43.0	7.16	47.7	8.07
	(36.00)	12	24.3	3.92	29.0	4.70	33.7	5.53	36.0	5.96	38.3	6.40	43.0	7.30	47.7	8.22
		14	24.3	3.99	29.0	4.78	33.7	5.63	36.0	6.07	38.3	6.52	43.0	7.43	47.7	8.38
		16	24.3	4.06	29.0	4.87	33.7	5.74	36.0	6.18	38.3	6.64	43.0	7.58	47.7	8.54
		18	24.3	4.13	29.0	4.96	33.7	5.84	36.0	6.30	38.3	6.77	43.0	7.73	47.7	8.71
		20	24.3	4.20	29.0	5.05	33.7	5.96	36.0	6.43	38.3	6.91	43.0	8.01	47.7	9.32
		21	24.3	4.24	29.0	5.10	33.7	6.02	36.0	6.49	38.3	7.05	43.0	8.30	47.7	9.65
		23	24.3	4.31	29.0	5.20	33.7	6.31	36.0	6.91	38.3	7.54	43.0	8.89	47.7	10.3
		25	24.3	4.45	29.0	5.54	33.7	6.74	36.0	7.39	38.3	8.06	43.0	9.51	47.7	11.1
		27	24.3	4.74	29.0	5.90	33.7	7.19	36.0	7.88	38.3	8.61	43.0	10.2	47.7	11.9
		29	24.3	5.04	29.0	6.28	33.7	7.66	36.0	8.41	38.3	9.19	43.0	10.9	47.7	12.7
		31	24.3	5.35	29.0	6.68	33.7	8.16	36.0	8.96	38.3	9.80	43.0	11.6	47.7	13.5
		33	24.3	5.67	29.0	7.10	33.7	8.69	36.0	9.54	38.3	10.4	43.0	12.4	47.7	14.4
		35	24.3	6.02	29.0	7.54	33.7	9.24	36.0	10.2	38.3	11.1	43.0	13.2	47.4	15.2
		37	24.3	6.38	29.0	8.01	33.7	9.83	36.0	10.8	38.3	11.8	43.0	14.0	46.6	15.8
		39	24.3	6.76	29.0	8.50	33.7	10.4	36.0	11.5	38.3	12.6	43.0	15.0	45.8	16.3
70	280	10	21.3	3.39	25.4	4.03	29.5	4.70	31.5	5.05	33.5	5.41	37.6	6.15	41.7	6.92
	(31.50)	12	21.3	3.45	25.4	4.09	29.5	4.78	31.5	5.14	33.5	5.51	37.6	6.26	41.7	7.05
		14	21.3	3.50	25.4	4.16	29.5	4.87	31.5	5.23	33.5	5.61	37.6	6.38	41.7	7.18
		16	21.3	3.56	25.4	4.24	29.5	4.96	31.5	5.33	33.5	5.71	37.6	6.50	41.7	7.32
		18	21.3	3.61	25.4	4.31	29.5	5.05	31.5	5.43	33.5	5.82	37.6	6.63	41.7	7.46
		20	21.3	3.68	25.4	4.39	29.5	5.14	31.5	5.54	33.5	5.94	37.6	6.76	41.7	7.67
		21	21.3	3.71	25.4	4.43	29.5	5.19	31.5	5.59	33.5	5.99	37.6	6.87	41.7	7.94
		23	21.3	3.77	25.4	4.51	29.5	5.30	31.5	5.78	33.5	6.28	37.6	7.35	41.7	8.51
		25	21.3	3.84	25.4	4.69	29.5	5.65	31.5	6.17	33.5	6.71	37.6	7.86	41.7	9.10
		27	21.3	4.06	25.4	4.99	29.5	6.02	31.5	6.58	33.5	7.16	37.6	8.39	41.7	9.73
		29	21.3	4.31	25.4	5.30	29.5	6.41	31.5	7.01	33.5	7.63	37.6	8.95	41.7	10.4
		31	21.3	4.57	25.4	5.63	29.5	6.82	31.5	7.46	33.5	8.12	37.6	9.54	41.7	11.1
		33	21.3	4.84	25.4	5.98	29.5	7.25	31.5	7.93	33.5	8.65	37.6	10.2	41.7	11.8
		35	21.3	5.12	25.4	6.35	29.5	7.70	31.5	8.43	33.5	9.20	37.6	10.8	41.7	12.6
		37	21.3	5.43	25.4	6.73	29.5	8.18	31.5	8.96	33.5	9.78	37.6	11.5	41.7	13.4
		39	21.3	5.74	25.4	7.13	29.5	8.69	31.5	9.52	33.5	10.4	37.6	12.3	41.7	14.3
60	240	10	18.2	2.95	21.7	3.47	25.2	4.01	27.0	4.29	28.8	4.59	32.3	5.19	35.8	5.81
	(27.00)	12	18.2	3.00	21.7	3.52	25.2	4.08	27.0	4.37	28.8	4.66	32.3	5.28	35.8	5.92
		14	18.2	3.04	21.7	3.57	25.2	4.15	27.0	4.44	28.8	4.75	32.3	5.37	35.8	6.03
		16	18.2	3.08	21.7	3.63	25.2	4.22	27.0	4.52	28.8	4.83	32.3	5.47	35.8	6.14
		18	18.2	3.13	21.7	3.69	25.2	4.29	27.0	4.60	28.8	4.92	32.3	5.58	35.8	6.26
		20	18.2	3.18	21.7	3.76	25.2	4.37	27.0	4.69	28.8	5.01	32.3	5.68	35.8	6.38
		21	18.2	3.21	21.7	3.79	25.2	4.41	27.0	4.73	28.8	5.06	32.3	5.74	35.8	6.45
		23	18.2	3.26	21.7	3.85	25.2	4.49	27.0	4.82	28.8	5.16	32.3	5.96	35.8	6.85
		25	18.2	3.31	21.7	3.92	25.2	4.66	27.0	5.06	28.8	5.48	32.3	6.37	35.8	7.32
		27	18.2	3.43	21.7	4.16	25.2	4.96	27.0	5.39	28.8	5.84	32.3	6.79	35.8	7.82
		29	18.2	3.64	21.7	4.42	25.2	5.28	27.0	5.74	28.8	6.21	32.3	7.23	35.8	8.34
		31	18.2	3.85	21.7	4.68	25.2	5.60	27.0	6.10	28.8	6.61	32.3	7.70	35.8	8.88
		33	18.2	4.07	21.7	4.96	25.2	5.95	27.0	6.48	28.8	7.03	32.3	8.20	35.8	9.46
		35	18.2	4.31	21.7	5.26	25.2	6.31	27.0	6.87	28.8	7.46	32.3	8.72	35.8	10.1
		37	18.2	4.55	21.7	5.57	25.2	6.69	27.0	7.29	28.8	7.92	32.3	9.26	35.8	10.7
		39	18.2	4.81	21.7	5.89	25.2	7.09	27.0	7.74	28.8	8.41	32.3	9.84	35.8	11.4
50	200	10	15.2	2.54	18.1	2.94	21.0	3.36	22.5	3.58	24.0	3.81	26.9	4.28	29.8	4.76
	(22.50)	12	15.2	2.57	18.1	2.98	21.0	3.41	22.5	3.64	24.0	3.87	26.9	4.35	29.8	4.85
		14	15.2	2.60	18.1	3.02	21.0	3.47	22.5	3.70	24.0	3.93	26.9	4.42	29.8	4.93
		16	15.2	2.64	18.1	3.07	21.0	3.52	22.5	3.76	24.0	4.00	26.9	4.50	29.8	5.02
		18	15.2	2.68	18.1	3.11	21.0	3.58	22.5	3.82	24.0	4.07	26.9	4.58	29.8	5.11
		20	15.2	2.72	18.1	3.16	21.0	3.64	22.5	3.89	24.0	4.14	26.9	4.67	29.8	5.21
		21	15.2	2.74	18.1	3.19	21.0	3.67	22.5	3.92	24.0	4.18	26.9	4.71	29.8	5.26
		23	15.2	2.78	18.1	3.24	21.0	3.73	22.5	3.99	24.0	4.25	26.9	4.80	29.8	5.38
		25	15.2	2.82	18.1	3.29	21.0	3.80	22.5	4.07	24.0	4.38	26.9	5.04	29.8	5.74
		27	15.2	2.86	18.1	3.41	21.0	4.01	22.5	4.33	24.0	4.66	26.9	5.36	29.8	6.12
		29	15.2	3.03	18.1	3.61	21.0	4.26	22.5	4.60	24.0	4.95	26.9	5.71	29.8	6.51
		31	15.2	3.20	18.1	3.83	21.0	4.51	22.5	4.88	24.0	5.26	26.9	6.06	29.8	6.93
		33	15.2	3.38	18.1	4.05	21.0	4.78	22.5	5.17	24.0	5.58	26.9	6.44	29.8	7.37
		35	15.2	3.57	18.1	4.28	21.0	5.06	22.5	5.48	24.0	5.92	26.9	6.84	29.8	7.83
		37	15.2	3.76	18.1	4.52	21.0	5.36	22.5	5.80	24.0	6.27	26.9	7.26	29.8	8.32
		39	15.2	3.97	18.1	4.78	21.0	5.67	22.5	6.15	24.0	6.64	26.9	7.70	29.8	8.83

3TW60652-3(2)

5 Capacity tables

5 - 2 Heating Capacity Tables

REYAQ10P

TC: Total Capacity: kW ; PI: Power Input: kW (compressor + outdoor fan motor)

Combination (%)	Capacity index (kW)	Outdoor air temp.		Indoor air temperature: °CDB											
				16.0		18.0		20.0		21.0		22.0		24.0	
				TC	PI	TC	PI	TC	PI	TC	PI	TC	PI	TC	PI
		°CDB	°CWB	kW	kW	kW	kW	kW	kW	kW	kW	kW	kW	kW	kW
130	325 (36.40)	-19.8	-20.0	20.6	5.42	20.6	5.79	20.5	6.16	20.5	6.35	20.4	6.53	20.4	6.90
		-18.8	-19.0	21.0	5.54	20.9	5.90	20.9	6.27	20.8	6.45	20.8	6.63	20.7	6.99
		-16.7	-17.0	21.8	5.79	21.7	6.14	21.6	6.49	21.6	6.66	21.6	6.84	21.5	7.19
		-13.7	-15.0	22.7	6.05	22.6	6.38	22.5	6.72	22.5	6.89	22.5	7.05	22.4	7.39
		-11.8	-13.0	23.7	6.31	23.6	6.63	23.5	6.95	23.5	7.11	23.4	7.27	23.4	7.59
		-9.8	-11.0	24.7	6.58	24.7	6.88	24.6	7.19	24.6	7.34	24.5	7.49	24.5	7.80
		-9.5	-10.0	25.3	6.71	25.3	7.01	25.2	7.31	25.1	7.46	25.1	7.61	25.0	7.90
		-8.5	-9.1	25.9	6.83	25.8	7.12	25.7	7.41	25.7	7.56	25.7	7.70	25.6	8.00
		-7.0	-7.6	26.8	7.02	26.7	7.30	26.7	7.59	26.6	7.73	26.6	7.87	26.5	8.15
		-5.0	-5.6	28.2	7.28	28.1	7.54	28.0	7.81	28.0	7.94	28.0	8.08	27.9	8.35
		-3.0	-3.7	29.5	7.51	29.5	7.77	29.4	8.02	29.4	8.15	29.3	8.27	29.3	8.53
		0.0	-0.7	31.9	7.86	31.8	8.10	31.8	8.33	31.7	8.45	31.7	8.57	31.6	8.80
		3.0	2.2	34.4	8.18	34.3	8.40	34.3	8.62	34.2	8.73	34.2	8.84	34.1	9.05
		5.0	4.1	36.1	8.38	36.1	8.59	36.0	8.80	36.0	8.90	35.9	9.00	35.7	9.14
		7.0	6.0	38.0	8.57	37.9	8.77	37.8	8.96	37.8	9.06	37.8	9.16	35.7	8.59
		9.0	7.9	39.9	8.75	39.8	8.94	39.8	9.12	39.6	9.19	38.3	8.81	35.7	8.07
		11.0	9.8	41.9	8.92	41.8	9.10	41.0	8.99	39.6	8.63	38.3	8.28	35.7	7.60
		13.0	11.8	44.1	9.09	43.6	9.10	41.0	8.42	39.6	8.09	38.3	7.77	35.7	7.14
		15.0	13.7	46.2	9.20	43.6	8.56	41.0	7.93	39.6	7.62	38.3	7.32	35.7	6.73
120	300 (33.60)	-19.8	-20.0	20.6	5.92	20.5	6.26	20.4	6.60	20.4	6.77	20.4	6.94	20.3	7.28
		-18.8	-19.0	20.9	6.03	20.8	6.37	20.8	6.70	20.7	6.87	20.7	7.04	20.6	7.37
		-16.7	-17.0	21.7	6.26	21.6	6.58	21.6	6.91	21.5	7.07	21.5	7.23	21.4	7.55
		-13.7	-15.0	22.6	6.50	22.5	6.81	22.4	7.12	22.4	7.27	22.4	7.43	22.3	7.74
		-11.8	-13.0	23.6	6.75	23.5	7.04	23.4	7.34	23.4	7.48	23.4	7.63	23.3	7.93
		-9.8	-11.0	24.7	6.99	24.6	7.27	24.5	7.56	24.5	7.70	24.5	7.84	24.4	8.12
		-9.5	-10.0	25.2	7.11	25.2	7.39	25.1	7.66	25.1	7.80	25.0	7.94	25.0	8.21
		-8.5	-9.1	25.8	7.22	25.7	7.49	25.6	7.76	25.6	7.90	25.6	8.03	25.5	8.30
		-7.0	-7.6	26.7	7.40	26.7	7.66	26.6	7.92	26.6	8.05	26.5	8.18	26.5	8.44
		-5.0	-5.6	28.1	7.64	28.0	7.88	27.9	8.13	27.9	8.25	27.9	8.38	27.8	8.62
		-3.0	-3.7	29.5	7.85	29.4	8.09	29.3	8.32	29.3	8.44	29.3	8.56	29.2	8.79
		0.0	-0.7	31.8	8.18	31.7	8.40	31.7	8.62	31.6	8.72	31.6	8.83	31.5	9.05
		3.0	2.2	34.3	8.48	34.2	8.68	34.2	8.88	34.1	8.98	34.1	9.08	32.9	8.82
		5.0	4.1	36.0	8.66	36.0	8.85	35.9	9.04	35.9	9.14	35.4	9.04	32.9	8.28
		7.0	6.0	37.9	8.84	37.8	9.02	37.7	9.20	36.6	8.85	35.4	8.49	32.9	7.79
		9.0	7.9	39.8	9.00	39.7	9.17	37.8	8.66	36.6	8.32	35.4	7.98	32.9	7.33
		11.0	9.8	41.8	9.16	40.2	8.79	37.8	8.14	36.6	7.83	35.4	7.52	32.9	6.91
		13.0	11.8	42.7	8.86	40.2	8.24	37.8	7.64	36.6	7.35	35.4	7.06	32.9	6.50
		15.0	13.7	42.7	8.34	40.2	7.76	37.8	7.20	36.6	6.93	35.4	6.66	32.9	6.14
110	275 (30.80)	-19.8	-20.0	20.5	6.42	20.4	6.73	20.3	7.04	20.3	7.20	20.3	7.36	20.2	7.67
		-18.8	-19.0	20.8	6.52	20.7	6.83	20.7	7.14	20.7	7.29	20.6	7.44	20.6	7.75
		-16.7	-17.0	21.6	6.73	21.5	7.03	21.5	7.32	21.4	7.47	21.4	7.62	21.4	7.91
		-13.7	-15.0	22.5	6.95	22.4	7.24	22.4	7.52	22.3	7.66	22.3	7.80	22.2	8.09
		-11.8	-13.0	23.5	7.18	23.4	7.45	23.3	7.72	23.3	7.86	23.3	7.99	23.2	8.26
		-9.8	-11.0	24.6	7.40	24.5	7.66	24.4	7.92	24.4	8.05	24.4	8.18	24.3	8.44
		-9.5	-10.0	25.1	7.52	25.1	7.77	25.0	8.02	25.0	8.15	24.9	8.27	24.9	8.53
		-8.5	-9.1	25.7	7.62	25.6	7.86	25.6	8.11	25.5	8.23	25.5	8.36	25.4	8.60
		-7.0	-7.6	26.6	7.78	26.6	8.02	26.5	8.26	26.5	8.38	26.4	8.50	26.4	8.73
		-5.0	-5.6	28.0	8.00	27.9	8.23	27.9	8.45	27.8	8.56	27.8	8.68	27.7	8.90
		-3.0	-3.7	29.4	8.20	29.3	8.41	29.2	8.63	29.2	8.74	29.2	8.84	29.1	9.06
		0.0	-0.7	31.7	8.50	31.6	8.70	31.6	8.90	31.6	9.00	31.5	9.10	30.2	8.71
		3.0	2.2	34.2	8.77	34.1	8.96	34.1	9.14	33.5	9.01	32.4	8.64	30.2	7.92
		5.0	4.1	35.9	8.94	35.9	9.12	34.7	8.81	33.5	8.47	32.4	8.12	30.2	7.45
		7.0	6.0	37.8	9.10	36.9	8.94	34.7	8.28	33.5	7.96	32.4	7.64	30.2	7.02
		9.0	7.9	39.1	9.03	36.9	8.40	34.7	7.79	33.5	7.49	32.4	7.19	30.2	6.61
		11.0	9.8	39.1	8.49	36.9	7.90	34.7	7.33	33.5	7.05	32.4	6.78	30.2	6.24
		13.0	11.8	39.1	7.96	36.9	7.42	34.7	6.89	33.5	6.63	32.4	6.38	30.2	5.88
		15.0	13.7	39.1	7.50	36.9	7.00	34.7	6.50	33.5	6.26	32.4	6.02	30.2	5.56
100	250 (28.00)	-19.8	-20.0	20.4	6.92	20.3	7.20	20.2	7.49	20.2	7.63	20.2	7.77	20.1	8.05
		-18.8	-19.0	20.7	7.01	20.7	7.29	20.6	7.57	20.6	7.71	20.5	7.85	20.5	8.13
		-16.7	-17.0	21.5	7.20	21.4	7.47	21.4	7.74	21.4	7.88	21.3	8.01	21.3	8.28
		-13.7	-15.0	22.4	7.41	22.3	7.66	22.3	7.92	22.2	8.05	22.2	8.18	22.2	8.44
		-11.8	-13.0	23.4	7.61	23.3	7.86	23.3	8.10	23.2	8.23	23.2	8.35	23.1	8.60
		-9.8	-11.0	24.5	7.82	24.4	8.05	24.3	8.29	24.3	8.40	24.3	8.52	24.2	8.76
		-9.5	-10.0	25.0	7.92	25.0	8.15	24.9	8.38	24.9	8.49	24.9	8.61	24.8	8.84
		-8.5	-9.1	25.6	8.01	25.5	8.24	25.5	8.46	25.4	8.57	25.4	8.68	25.4	8.91
		-7.0	-7.6	26.5	8.16	26.5	8.38	26.4	8.60	26.4	8.70	26.4	8.81	26.3	9.03
		-5.0	-5.6	27.9	8.36	27.8	8.57	27.8	8.77	27.7	8.87	27.7	8.98	27.5	9.07
		-3.0	-3.7	29.3	8.54	29.2	8.74	29.1	8.93	29.1	9.03	29.1	9.13	27.5	8.54
		0.0	-0.7	31.6	8.82	31.6	9.00	31.5	9.18	30.5	8.81	29.5	8.45	27.5	7.75
		3.0	2.2	34.1	9.07	33.5	9.01	31.5	8.34	30.5	8.02	29.5	7.70	27.5	7.07
		5.0	4.1	35.5	9.10	33.5	8.46	31.5	7.84	30.5	7.54	29.5	7.24	27.5	6.66
		7.0	6.0	35.5	8.54	33.5	7.95	31.5	7.38	30.5	7.10	29.5	6.82	27.5	6.28
		9.0	7.9	35.5	8.03	33.5	7.48	31.5	6.95	30.5	6.69	29.5	6.43	27.5	5.93
		11.0	9.8	35.5	7.56	33.5	7.05	31.5	6.55	30.5	6.31	29.5	6.07	27.5	5.60
		13.0	11.8	35.5	7.10	33.5	6.63	31.5	6.17	30.5	5.94	29.5	5.72	27.5	5.28
		15.0	13.7	35.5	6.70	33.5	6.26	31.5	5.83	30.5	5.62	29.5	5.41	27.5	5.00

3TW60652-1(1)

NOTES - ANMERKUNGEN - Σημειώσεις - NOTAS - REMARQUES - NOTE - OPMERKINGEN - примечания - NOTLAR

1 is shown as reference. When selecting the unit models, avoid the Outdoor air temperature range shown by .

dient als Verweis. Vermeiden Sie bei der Auswahl der Gerätemodelle den als markierten Temperaturbereich der Außenluft

Η είναι ενδεικτική. κατά την επιλογή των μοντέλων των μονάδων, αποφύγετε το εύρος θερμοκρασίας εξωτερικού αέρα που υποδεικνύεται

se muestra como referencia. Cuando seleccione los modelos de unidad, evite el intervalo de temperaturas del aire exterior indicado mediante

est montré comme référence.Lors du choix des modèles d'unités, évitez la plage de températures de l'air extérieur illustré par

valori riportati unicamente come riferimento. Nel selezionare i modelli delle unità, non considerare i valori di temperatura dell'aria esterna indicati con il colore

is als referentie getoond. Wanneer modellen van eenheden worden gekozen, vermijd dan het bereik van buitenluchttemperaturen geïllustreerd door

показан как. При выборе модели устройства избегайте внешнюю температуру воздуха, указанную в

referans olarak gösterilmektedir. Ünite modellerini seçerken, belirtilen Dış hava sıcaklığı aralığından kaçının

2 The above table shows the average value of conditions which may occur.

Die obige Tabelle zeigt den Durchschnittswert der Bedingungen, die auftreten können.

Στον παραπάνω πίνακα αναγράφεται η μέση τιμή για συνθήκες που μπορεί να προκύψουν.

La tabla de arriba muestra el valor medio de condiciones que pueden ocurrir.

Le tableau ci-dessus donne la valeur moyenne pour des conditions qui peuvent survenir.

La tabella in alto mostra il valore delle condizioni medie che si possono riscontrare.

De tabel hierboven geeft de gemiddelde waarde aan van situaties die kunnen voorvallen.

Таблица расположенная выше показывает среднее значение условий, которые могут наступить.

Yukarıdaki tablo meydana gelebilecek koşulların ortalama değerini göstermektedir.

5 Capacity tables

5 - 2 Heating Capacity Tables

REYAQ10P

TC: Total Capacity: kW ; PI: Power Input: kW (compressor + outdoor fan motor)

Combination (%)	Capacity index (kW)	Outdoor air temp.		Indoor air temperature: °CDB											
				16.0		18.0		20.0		21.0		22.0		24.0	
				TC	PI	TC	PI	TC	PI	TC	PI	TC	PI	TC	PI
		°CDB	°CWB	kW	kW	kW	kW	kW	kW	kW	kW	kW	kW	kW	kW
90%	225 (25.20)	-19.8	-20.0	20.3	7.42	20.2	7.67	20.2	7.93	20.1	8.06	20.1	8.18	20.1	8.44
		-18.8	-19.0	20.6	7.50	20.6	7.75	20.5	8.00	20.5	8.13	20.5	8.25	20.4	8.51
		-16.7	-17.0	21.4	7.68	21.4	7.92	21.3	8.16	21.3	8.28	21.3	8.40	21.2	8.64
		-13.7	-15.0	22.3	7.86	22.2	8.09	22.2	8.32	22.2	8.44	22.1	8.55	22.1	8.78
		-11.8	-13.0	23.3	8.04	23.2	8.27	23.2	8.49	23.1	8.60	23.1	8.71	23.1	8.93
		-9.8	-11.0	24.4	8.23	24.3	8.44	24.3	8.65	24.2	8.76	24.2	8.86	24.2	9.08
		-9.5	-10.0	24.9	8.32	24.9	8.53	24.8	8.74	24.8	8.84	24.8	8.94	24.7	9.13
		-8.5	-9.1	25.5	8.41	25.4	8.61	25.4	8.81	25.4	8.91	25.3	9.01	24.7	8.88
		-7.0	-7.6	26.4	8.54	26.4	8.74	26.3	8.93	26.3	9.03	26.3	9.13	24.7	8.48
		-5.0	-5.6	27.8	8.72	27.7	8.91	27.7	9.09	27.4	9.07	26.5	8.70	24.7	7.97
		-3.0	-3.7	29.2	8.89	29.1	9.06	28.4	8.88	27.4	8.53	26.5	8.19	24.7	7.51
		0.0	-0.7	31.5	9.13	30.2	8.70	28.4	8.06	27.4	7.75	26.5	7.44	24.7	6.84
		3.0	2.2	32.0	8.50	30.2	7.92	28.4	7.34	27.4	7.06	26.5	6.79	24.7	6.25
		5.0	4.1	32.0	7.99	30.2	7.45	28.4	6.92	27.4	6.66	26.5	6.40	24.7	5.90
		7.0	6.0	32.0	7.52	30.2	7.01	28.4	6.52	27.4	6.28	26.5	6.04	24.7	5.57
		9.0	7.9	32.0	7.08	30.2	6.61	28.4	6.15	27.4	5.92	26.5	5.70	24.7	5.26
		11.0	9.8	32.0	6.67	30.2	6.23	28.4	5.81	27.4	5.60	26.5	5.39	24.7	4.98
		13.0	11.8	32.0	6.28	30.2	5.87	28.4	5.47	27.4	5.28	26.5	5.08	24.7	4.71
		15.0	13.7	32.0	5.93	30.2	5.55	28.4	5.18	27.4	5.00	26.5	4.82	24.7	4.46
80%	200 (22.40)	-19.8	-20.0	20.2	7.92	20.1	8.14	20.1	8.37	20.1	8.48	20.0	8.60	20.0	8.82
		-18.8	-19.0	20.5	7.99	20.5	8.21	20.4	8.44	20.4	8.55	20.4	8.66	20.3	8.88
		-16.7	-17.0	21.3	8.15	21.3	8.36	21.2	8.58	21.2	8.68	21.2	8.79	21.1	9.01
		-13.7	-15.0	22.2	8.31	22.1	8.52	22.1	8.72	22.1	8.83	22.1	8.93	22.0	9.10
		-11.8	-13.0	23.2	8.48	23.1	8.67	23.1	8.87	23.1	8.97	23.0	9.07	22.0	8.61
		-9.8	-11.0	24.3	8.64	24.2	8.83	24.2	9.02	24.1	9.11	23.6	8.88	22.0	8.13
		-9.5	-10.0	24.8	8.73	24.8	8.91	24.8	9.09	24.4	8.99	23.6	8.62	22.0	7.90
		-8.5	-9.1	25.4	8.80	25.3	8.98	25.2	9.11	24.4	8.74	23.6	8.39	22.0	7.69
		-7.0	-7.6	26.3	8.92	26.3	9.10	25.2	8.69	24.4	8.35	23.6	8.01	22.0	7.35
		-5.0	-5.6	27.7	9.08	26.8	8.82	25.2	8.17	24.4	7.85	23.6	7.53	22.0	6.92
		-3.0	-3.7	28.4	8.92	26.8	8.30	25.2	7.69	24.4	7.40	23.6	7.10	22.0	6.53
		0.0	-0.7	28.4	8.09	26.8	7.54	25.2	7.00	24.4	6.73	23.6	6.47	22.0	5.96
		3.0	2.2	28.4	7.37	26.8	6.88	25.2	6.39	24.4	6.16	23.6	5.92	22.0	5.47
		5.0	4.1	28.4	6.94	26.8	6.48	25.2	6.03	24.4	5.81	23.6	5.59	22.0	5.17
		7.0	6.0	28.4	6.54	26.8	6.11	25.2	5.69	24.4	5.49	23.6	5.29	22.0	4.89
		9.0	7.9	28.4	6.17	26.8	5.77	25.2	5.38	24.4	5.19	23.6	5.00	22.0	4.63
		11.0	9.8	28.4	5.83	26.8	5.45	25.2	5.09	24.4	4.91	23.6	4.73	22.0	4.39
		13.0	11.8	28.4	5.49	26.8	5.15	25.2	4.81	24.4	4.64	23.6	4.48	22.0	4.15
		15.0	13.7	28.4	5.20	26.8	4.88	25.2	4.56	24.4	4.40	23.6	4.25	22.0	3.95
70%	175 (19.60)	-19.8	-20.0	20.1	8.41	20.0	8.61	20.0	8.81	20.0	8.91	19.9	9.01	19.2	8.71
		-18.8	-19.0	20.4	8.48	20.4	8.68	20.3	8.87	20.3	8.97	20.3	9.07	19.2	8.52
		-16.7	-17.0	21.2	8.62	21.2	8.81	21.1	8.99	21.1	9.09	20.6	8.87	19.2	8.12
		-13.7	-15.0	22.1	8.76	22.1	8.94	22.0	9.12	21.3	8.78	20.6	8.42	19.2	7.72
		-11.8	-13.0	23.1	8.91	23.0	9.08	22.1	8.66	21.3	8.31	20.6	7.98	19.2	7.32
		-9.8	-11.0	24.2	9.06	23.5	8.82	22.1	8.17	21.3	7.86	20.6	7.54	19.2	6.93
		-9.5	-10.0	24.7	9.13	23.5	8.57	22.1	7.94	21.3	7.63	20.6	7.33	19.2	6.74
		-8.5	-9.1	24.9	8.96	23.5	8.34	22.1	7.73	21.3	7.43	20.6	7.14	19.2	6.56
		-7.0	-7.6	24.9	8.56	23.5	7.97	22.1	7.39	21.3	7.11	20.6	6.83	19.2	6.29
		-5.0	-5.6	24.9	8.04	23.5	7.49	22.1	6.96	21.3	6.69	20.6	6.43	19.2	5.93
		-3.0	-3.7	24.9	7.57	23.5	7.06	22.1	6.56	21.3	6.32	20.6	6.08	19.2	5.61
		0.0	-0.7	24.9	6.89	23.5	6.44	22.1	5.99	21.3	5.77	20.6	5.56	19.2	5.13
		3.0	2.2	24.9	6.30	23.5	5.89	22.1	5.49	21.3	5.29	20.6	5.10	19.2	4.72
		5.0	4.1	24.9	5.94	23.5	5.56	22.1	5.19	21.3	5.01	20.6	4.83	19.2	4.47
		7.0	6.0	24.9	5.61	23.5	5.26	22.1	4.91	21.3	4.74	20.6	4.57	19.2	4.24
		9.0	7.9	24.9	5.31	23.5	4.97	22.1	4.65	21.3	4.49	20.6	4.33	19.2	4.02
		11.0	9.8	24.9	5.02	23.5	4.71	22.1	4.41	21.3	4.26	20.6	4.11	19.2	3.82
		13.0	11.8	24.9	4.74	23.5	4.45	22.1	4.17	21.3	4.03	20.6	3.89	19.2	3.62
		15.0	13.7	24.9	4.50	23.5	4.23	22.1	3.96	21.3	3.83	20.6	3.70	19.2	3.45
60%	150 (16.80)	-19.8	-20.0	20.0	8.91	19.9	9.08	18.9	8.53	18.3	8.19	17.7	7.86	16.5	7.22
		-18.8	-19.0	20.3	8.97	20.1	9.01	18.9	8.34	18.3	8.02	17.7	7.70	16.5	7.07
		-16.7	-17.0	21.1	9.09	20.1	8.59	18.9	7.96	18.3	7.65	17.7	7.35	16.5	6.75
		-13.7	-15.0	21.3	8.78	20.1	8.16	18.9	7.57	18.3	7.28	17.7	6.99	16.5	6.43
		-11.8	-13.0	21.3	8.31	20.1	7.74	18.9	7.18	18.3	6.91	17.7	6.64	16.5	6.11
		-9.8	-11.0	21.3	7.85	20.1	7.31	18.9	6.79	18.3	6.54	17.7	6.29	16.5	5.80
		-9.5	-10.0	21.3	7.62	20.1	7.11	18.9	6.61	18.3	6.36	17.7	6.12	16.5	5.64
		-8.5	-9.1	21.3	7.43	20.1	6.93	18.9	6.44	18.3	6.20	17.7	5.96	16.5	5.50
		-7.0	-7.6	21.3	7.10	20.1	6.63	18.9	6.17	18.3	5.94	17.7	5.72	16.5	5.28
		-5.0	-5.6	21.3	6.69	20.1	6.25	18.9	5.82	18.3	5.61	17.7	5.40	16.5	4.99
		-3.0	-3.7	21.3	6.32	20.1	5.90	18.9	5.50	18.3	5.31	17.7	5.11	16.5	4.73
		0.0	-0.7	21.3	5.77	20.1	5.40	18.9	5.04	18.3	4.86	17.7	4.69	16.5	4.35
		3.0	2.2	21.3	5.29	20.1	4.96	18.9	4.64	18.3	4.48	17.7	4.32	16.5	4.01
		5.0	4.1	21.3	5.00	20.1	4.69	18.9	4.39	18.3	4.24	17.7	4.10	16.5	3.81
		7.0	6.0	21.3	4.74	20.1	4.45	18.9	4.16	18.3	4.03	17.7	3.89	16.5	3.62
		9.0	7.9	21.3	4.49	20.1	4.22	18.9	3.95	18.3	3.82	17.7	3.69	16.5	3.44
		11.0	9.8	21.3	4.25	20.1	4.00	18.9	3.75	18.3	3.63	17.7	3.51	16.5	3.27
		13.0	11.8	21.3	4.03	20.1	3.79	18.9	3.56	18.3	3.45	17.7	3.33	16.5	3.11
		15.0	13.7	21.3	3.83	20.1	3.61	18.9	3.39	18.3	3.28	17.7	3.18	16.5	2.97
50%	125 (14.00)	-19.8	-20.0	17.8	7.91	16.8	7.37	15.8	6.85	15.2	6.59	14.7	6.34	13.7	5.84
		-18.8	-19.0	17.8	7.74	16.8	7.22	15.8	6.70	15.2	6.45	14.7	6.21	13.7	5.72
		-16.7	-17.0	17.8	7.39	16.8	6.90	15.8	6.41	15.2	6.17	14.7	5.94	13.7	5.48
		-13.7	-15.0	17.8	7.04	16.8	6.57	15.8	6.11	15.2	5.89	14.7	5.66	13.7	5.23
		-11.8	-13.0	17.8	6.68	16.8	6.24	15.8	5.81	15.2	5.60	14.7	5.39	13.7	4.98
		-9.8	-11.0	17.8	6.32	16.8	5.91	15.8	5.51	15.2	5.31	14.7	5.12	13.7	4.73
		-9.5	-10.0	17.8	6.15	16.8	5.75	15.8	5.36	15.2	5.17	14.7	4.98	13.7	4.61
		-8.5	-9.1	17.8	6.00	16.8	5.61	15.8	5.23	15.2	5.05	14.7	4.87	13.7	4.51
		-7.0	-7.6	17.8	5.75	16.8	5.38	15.8	5.02	15.2	4.85	14.7	4.67	13.7	4.33
		-5.0	-5.6	17.8	5.43	16.8	5.09	15.8	4.75	15.2	4.59	14.7	4.43	13.7	4.11
		-3.0	-3.7	17.8	5.14	16.8	4.82	15.8	4.51	15.2	4.35	14.7	4.20	13.7	3.90
		0.0	-0.7	17.8	4.71	16.8	4.43	15.8	4.15	15.2	4.01	14.7	3.87	13.7	3.60
		3.0	2.2	17.8	4.34	16.8	4.08	15.8	3.83	15.2	3.70	14.7	3.58	13.7	3.34
		5.0	4.1	17.8	4.12	16.8	3.87	15.8	3.64	15.2	3.52	14.7	3.40	13.7	3.17
		7.0	6.0	17.8	3.91	16.8	3.68	15.8	3.46	15.2	3.35	14.7	3.24	13.7	3.02
		9.0	7.9	17.8	3.71	16.8	3.50	15.8	3.29	15.2	3.19	14.7	3.09	13.7	2.88
		11.0	9.8	17.8	3.53	16.8	3.33	15.8	3.13	15.2	3.04	14.7	2.94	13.7	2.75
		13.0	11.8	17.8	3.35	16.8	3.16	15.8	2.98	15.2	2.89	14.7	2.80	13.7	2.62
		15.0	13.7	17.8	3.19	16.8	3.02	15.8	2.85	15.2	2.76	14.7	2.68	13.7	2.51

3TW60652-1(2)

5 Capacity tables

5 - 2 Heating Capacity Tables

REYAQ12P

TC: Total Capacity: kW ; PI: Power Input: kW (compressor + outdoor fan motor)

Combination (%)	Capacity index (kW)	Outdoor air temp.		Indoor air temperature: °CDB											
				16.0		18.0		20.0		21.0		22.0		24.0	
				TC	PI	TC	PI	TC	PI	TC	PI	TC	PI	TC	PI
		°CDB	°CWB	kW	kW	kW	kW	kW	kW	kW	kW	kW	kW	kW	kW
130	390 (43.55)	-19.8	-20.0	21.3	4.20	21.2	4.64	21.2	5.09	21.1	5.31	21.1	5.53	21.0	5.98
		-18.8	-19.0	21.7	4.34	21.6	4.78	21.5	5.21	21.5	5.43	21.4	5.65	21.3	6.09
		-16.7	-17.0	22.5	4.63	22.4	5.05	22.3	5.48	22.3	5.69	22.2	5.90	22.2	6.32
		-13.7	-15.0	23.4	4.94	23.3	5.34	23.2	5.75	23.2	5.95	23.1	6.15	23.1	6.55
		-11.8	-13.0	24.4	5.25	24.3	5.64	24.2	6.02	24.2	6.22	24.2	6.41	24.1	6.80
		-9.8	-11.0	25.5	5.57	25.4	5.94	25.3	6.30	25.3	6.49	25.3	6.67	25.2	7.04
		-9.5	-10.0	26.1	5.72	26.0	6.08	25.9	6.44	25.9	6.62	25.9	6.80	25.8	7.16
		-8.5	-9.1	26.7	5.86	26.6	6.22	26.5	6.57	26.4	6.74	26.4	6.92	26.3	7.27
		-7.0	-7.6	27.6	6.09	27.5	6.43	27.5	6.77	27.4	6.94	27.4	7.11	27.3	7.45
		-5.0	-5.6	29.0	6.39	28.9	6.72	28.8	7.04	28.8	7.20	28.8	7.36	28.7	7.68
		-3.0	-3.7	30.4	6.67	30.3	6.98	30.3	7.28	30.2	7.43	30.2	7.59	30.1	7.89
		0.0	-0.7	32.8	7.09	32.7	7.37	32.7	7.65	32.6	7.79	32.6	7.93	32.5	8.22
		3.0	2.2	35.4	7.46	35.3	7.72	35.2	7.98	35.2	8.11	35.1	8.24	35.0	8.51
		5.0	4.1	37.2	7.69	37.1	7.94	37.0	8.19	37.0	8.31	36.9	8.44	36.8	8.69
		7.0	6.0	39.0	7.91	39.0	8.15	38.9	8.38	38.8	8.50	38.8	8.62	38.7	8.86
		9.0	7.9	41.0	8.12	40.9	8.34	40.8	8.57	40.8	8.68	40.8	8.79	40.7	9.02
		11.0	9.8	43.1	8.32	43.0	8.53	42.9	8.74	42.9	8.85	42.8	8.96	42.5	9.09
		13.0	11.8	45.3	8.51	45.2	8.71	45.2	8.92	45.1	9.02	45.1	9.12	42.5	8.53
		15.0	13.7	47.6	8.69	47.5	8.88	47.4	9.07	47.2	9.11	45.6	8.75	42.5	8.05
120	360 (40.20)	-19.8	-20.0	21.2	4.80	21.1	5.21	21.1	5.62	21.0	5.83	21.0	6.03	20.9	6.44
		-18.8	-19.0	21.6	4.93	21.5	5.33	21.4	5.74	21.4	5.94	21.3	6.14	21.3	6.54
		-16.7	-17.0	22.4	5.20	22.3	5.59	22.2	5.98	22.2	6.17	22.1	6.37	22.1	6.75
		-13.7	-15.0	23.3	5.49	23.2	5.86	23.1	6.23	23.1	6.42	23.0	6.60	23.0	6.97
		-11.8	-13.0	24.3	5.77	24.2	6.13	24.1	6.49	24.1	6.66	24.1	6.84	24.0	7.20
		-9.8	-11.0	25.4	6.06	25.3	6.40	25.2	6.74	25.2	6.91	25.2	7.08	25.1	7.42
		-9.5	-10.0	26.0	6.21	25.9	6.54	25.8	6.87	25.8	7.04	25.8	7.20	25.7	7.53
		-8.5	-9.1	26.5	6.34	26.5	6.66	26.4	6.99	26.4	7.15	26.3	7.31	26.2	7.63
		-7.0	-7.6	27.5	6.55	27.4	6.86	27.4	7.18	27.3	7.33	27.3	7.49	27.2	7.80
		-5.0	-5.6	28.9	6.83	28.8	7.12	28.7	7.42	28.7	7.57	28.7	7.72	28.6	8.01
		-3.0	-3.7	30.3	7.08	30.2	7.37	30.2	7.65	30.1	7.79	30.1	7.93	30.0	8.21
		0.0	-0.7	32.7	7.47	32.6	7.73	32.6	7.99	32.5	8.12	32.5	8.25	32.4	8.51
		3.0	2.2	35.3	7.81	35.2	8.06	35.1	8.30	35.1	8.42	35.0	8.54	34.9	8.78
		5.0	4.1	37.0	8.03	37.0	8.26	36.9	8.49	36.9	8.60	36.8	8.72	36.7	8.94
		7.0	6.0	38.9	8.23	38.8	8.45	38.8	8.67	38.7	8.77	38.7	8.88	38.6	9.10
		9.0	7.9	40.9	8.42	40.8	8.63	40.7	8.84	40.7	8.94	40.7	9.04	39.2	8.78
		11.0	9.8	43.0	8.61	42.9	8.80	42.8	9.00	42.8	9.10	42.1	8.99	39.2	8.26
		13.0	11.8	45.2	8.79	45.1	8.97	45.0	9.14	43.6	8.79	42.1	8.44	39.2	7.77
		15.0	13.7	47.5	8.95	47.4	9.13	45.0	8.61	43.6	8.29	42.1	7.96	39.2	7.33
110	330 (36.85)	-19.8	-20.0	21.1	5.40	21.0	5.78	20.9	6.15	20.9	6.34	20.9	6.53	20.8	6.91
		-18.8	-19.0	21.5	5.52	21.4	5.89	21.3	6.26	21.3	6.44	21.2	6.63	21.2	7.00
		-16.7	-17.0	22.3	5.77	22.2	6.13	22.1	6.48	22.1	6.66	22.0	6.84	22.0	7.19
		-13.7	-15.0	23.2	6.03	23.1	6.37	23.0	6.71	23.0	6.88	23.0	7.05	22.9	7.40
		-11.8	-13.0	24.2	6.30	24.1	6.62	24.0	6.95	24.0	7.11	24.0	7.27	23.9	7.60
		-9.8	-11.0	25.3	6.56	25.2	6.87	25.1	7.18	25.1	7.34	25.1	7.50	25.0	7.81
		-9.5	-10.0	25.9	6.69	25.8	7.00	25.7	7.30	25.7	7.45	25.7	7.61	25.6	7.91
		-8.5	-9.1	26.4	6.81	26.4	7.11	26.3	7.41	26.3	7.56	26.2	7.70	26.1	8.00
		-7.0	-7.6	27.4	7.01	27.3	7.29	27.3	7.58	27.2	7.72	27.2	7.87	27.1	8.15
		-5.0	-5.6	28.8	7.26	28.7	7.53	28.6	7.81	28.6	7.94	28.6	8.08	28.5	8.35
		-3.0	-3.7	30.2	7.50	30.1	7.76	30.0	8.01	30.0	8.14	30.0	8.27	29.9	8.53
		0.0	-0.7	32.6	7.85	32.5	8.09	32.5	8.33	32.4	8.45	32.4	8.57	32.3	8.80
		3.0	2.2	35.1	8.17	35.1	8.39	35.0	8.61	35.0	8.72	34.9	8.83	34.9	9.05
		5.0	4.1	36.9	8.36	36.9	8.57	36.8	8.78	36.8	8.89	36.7	8.99	35.9	8.93
		7.0	6.0	38.8	8.55	38.7	8.75	38.7	8.95	38.6	9.05	38.6	9.15	35.9	8.41
		9.0	7.9	40.8	8.73	40.7	8.92	40.6	9.11	39.9	8.96	38.6	8.61	35.9	7.92
		11.0	9.8	42.8	8.89	42.8	9.07	41.3	8.77	39.9	8.44	38.6	8.11	35.9	7.47
		13.0	11.8	45.1	9.06	43.9	8.87	41.3	8.24	39.9	7.93	38.6	7.63	35.9	7.03
		15.0	13.7	46.6	8.97	43.9	8.36	41.3	7.78	39.9	7.49	38.6	7.20	35.9	6.64
100	300 (33.50)	-19.8	-20.0	21.0	6.00	20.9	6.34	20.8	6.69	20.8	6.86	20.8	7.03	20.7	7.37
		-18.8	-19.0	21.3	6.11	21.3	6.45	21.2	6.78	21.2	6.95	21.1	7.12	21.1	7.46
		-16.7	-17.0	22.1	6.34	22.1	6.66	22.0	6.99	22.0	7.15	21.9	7.31	21.9	7.63
		-13.7	-15.0	23.1	6.58	23.0	6.89	22.9	7.20	22.9	7.35	22.9	7.51	22.8	7.82
		-11.8	-13.0	24.1	6.82	24.0	7.11	23.9	7.41	23.9	7.56	23.9	7.71	23.8	8.00
		-9.8	-11.0	25.2	7.06	25.1	7.34	25.0	7.62	25.0	7.77	25.0	7.91	24.9	8.19
		-9.5	-10.0	25.8	7.18	25.7	7.46	25.6	7.73	25.6	7.87	25.6	8.01	25.5	8.28
		-8.5	-9.1	26.3	7.29	26.3	7.56	26.2	7.83	26.2	7.96	26.1	8.10	26.1	8.37
		-7.0	-7.6	27.3	7.46	27.2	7.72	27.2	7.99	27.1	8.12	27.1	8.25	27.0	8.51
		-5.0	-5.6	28.7	7.70	28.6	7.94	28.5	8.19	28.5	8.31	28.5	8.44	28.4	8.68
		-3.0	-3.7	30.1	7.91	30.0	8.14	29.9	8.38	29.9	8.50	29.9	8.61	29.8	8.85
		0.0	-0.7	32.5	8.23	32.4	8.45	32.4	8.66	32.3	8.77	32.3	8.88	32.2	9.10
		3.0	2.2	35.0	8.52	35.0	8.72	34.9	8.92	34.9	9.02	34.8	9.12	32.7	8.48
		5.0	4.1	36.8	8.70	36.8	8.89	36.7	9.08	36.3	9.04	35.1	8.68	32.7	7.98
		7.0	6.0	38.7	8.87	38.6	9.05	37.5	8.84	36.3	8.50	35.1	8.17	32.7	7.52
		9.0	7.9	40.7	9.03	39.9	8.96	37.5	8.32	36.3	8.01	35.1	7.70	32.7	7.09
		11.0	9.8	42.3	9.05	39.9	8.44	37.5	7.84	36.3	7.55	35.1	7.26	32.7	6.70
		13.0	11.8	42.3	8.49	39.9	7.93	37.5	7.38	36.3	7.11	35.1	6.84	32.7	6.32
		15.0	13.7	42.3	8.01	39.9	7.48	37.5	6.97	36.3	6.72	35.1	6.47	32.7	5.98

3TW60652-1(1)

NOTES - ANMERKUNGEN - Σημειώσεις - NOTAS - REMARQUES - NOTE - OPMERKINGEN - примечания - NOTLAR

1 is shown as reference. When selecting the unit models, avoid the Outdoor air temperature range shown by .

dient als Verweis. Vermeiden Sie bei der Auswahl der Gerätemodelle den als markierten Temperaturbereich der Außenluft

Η είναι ενδεικτική. κατά την επιλογή των μοντέλων των μονάδων, αποφύγετε το εύρος θερμοκρασίας εξωτερικού αέρα που υποδεικνύεται

se muestra como referencia. Cuando seleccione los modelos de unidad, evite el intervalo de temperaturas del aire exterior indicado mediante

est montré comme référence.Lors du choix des modèles d'unités, évitez la plage de températures de l'air extérieur illustré par

valori riportati unicamente come riferimento. Nel selezionare i modelli delle unità, non considerare i valori di temperatura dell'aria esterna indicati con il colore

is als referentie getoond. Wanneer modellen van eenheden worden gekozen, vermijd dan het bereik van buitenluchttemperaturen geïllustreerd door

показан как. При выборе модели устройства избегайте внешнюю температуру воздуха, указанную в

referans olarak gösterilmektedir. Ünite modellerini seçerken, belirtilen Dış hava sıcaklığı aralığından kaçının

2 The above table shows the average value of conditions which may occur.

Die obige Tabelle zeigt den Durchschnittswert der Bedingungen, die auftreten können.

Στον παραπάνω πίνακα αναγράφεται η μέση τιμή για συνθήκες που μπορεί να προκύψουν.

La tabla de arriba muestra el valor medio de condiciones que pueden ocurrir.

Le tableau ci-dessus donne la valeur moyenne pour des conditions qui peuvent survenir.

La tabella in alto mostra il valore delle condizioni medie che si possono riscontrare.

De tabel hierboven geeft de gemiddelde waarde aan van situaties die kunnen voorvallen.

Таблица расположенная выше показывает среднее значение условий, которые могут наступить.

Yukarıdaki tablo meydana gelebilecek koşulların ortalama değerini göstermektedir.

5 Capacity tables

5 - 2 Heating Capacity Tables

REYAQ12P

TC: Total Capacity: kW ; PI: Power Input: kW (compressor + outdoor fan motor)

Combination (%)	Capacity index (kW)	Outdoor air temp.		Indoor air temperature: °CDB											
				16.0		18.0		20.0		21.0		22.0		24.0	
				TC	PI	TC	PI	TC	PI	TC	PI	TC	PI	TC	PI
		°CDB	°CWB	kW	kW	kW	kW	kW	kW	kW	kW	kW	kW	kW	kW
90%	270 (30.15)	-19.8	-20.0	20.9	6.60	20.8	6.91	20.7	7.22	20.7	7.37	20.7	7.53	20.6	7.84
		-18.8	-19.0	21.2	6.70	21.2	7.00	21.1	7.31	21.1	7.46	21.0	7.61	21.0	7.91
		-16.7	-17.0	22.0	6.91	22.0	7.20	21.9	7.49	21.9	7.63	21.9	7.78	21.8	8.07
		-13.7	-15.0	22.9	7.12	22.9	7.40	22.8	7.68	22.8	7.82	22.8	7.96	22.7	8.24
		-11.8	-13.0	23.9	7.34	23.9	7.60	23.8	7.87	23.8	8.00	23.8	8.14	23.7	8.41
		-9.8	-11.0	25.1	7.56	25.0	7.81	24.9	8.07	24.9	8.19	24.9	8.32	24.8	8.57
		-9.5	-10.0	25.6	7.66	25.6	7.91	25.5	8.16	25.5	8.29	25.5	8.41	25.4	8.66
		-8.5	-9.1	26.2	7.76	26.1	8.00	26.1	8.25	26.1	8.37	26.0	8.49	26.0	8.73
		-7.0	-7.6	27.2	7.92	27.1	8.16	27.1	8.39	27.0	8.51	27.0	8.62	26.9	8.86
		-5.0	-5.6	28.6	8.13	28.5	8.35	28.4	8.58	28.4	8.69	28.4	8.80	28.3	9.02
		-3.0	-3.7	30.0	8.32	29.9	8.53	29.8	8.75	29.8	8.85	29.8	8.96	29.4	9.02
		0.0	-0.7	32.4	8.61	32.3	8.81	32.3	9.00	32.2	9.10	31.6	8.93	29.4	8.20
		3.0	2.2	34.9	8.87	34.9	9.05	33.8	8.81	32.7	8.47	31.6	8.14	29.4	7.49
		5.0	4.1	36.7	9.03	35.9	8.92	33.8	8.29	32.7	7.98	31.6	7.67	29.4	7.07
		7.0	6.0	38.1	9.01	35.9	8.40	33.8	7.81	32.7	7.52	31.6	7.23	29.4	6.67
		9.0	7.9	38.1	8.48	35.9	7.91	33.8	7.36	32.7	7.09	31.6	6.82	29.4	6.30
		11.0	9.8	38.1	7.99	35.9	7.46	33.8	6.95	32.7	6.70	31.6	6.45	29.4	5.96
		13.0	11.8	38.1	7.51	35.9	7.02	33.8	6.55	32.7	6.31	31.6	6.08	29.4	5.63
		15.0	13.7	38.1	7.09	35.9	6.64	33.8	6.19	32.7	5.98	31.6	5.76	29.4	5.34
80%	240 (26.80)	-19.8	-20.0	20.7	7.20	20.7	7.48	20.6	7.75	20.6	7.89	20.6	8.03	20.5	8.30
		-18.8	-19.0	21.1	7.29	21.1	7.56	21.0	7.83	21.0	7.96	21.0	8.10	20.9	8.37
		-16.7	-17.0	21.9	7.47	21.9	7.73	21.8	7.99	21.8	8.12	21.8	8.25	21.7	8.51
		-13.7	-15.0	22.8	7.66	22.8	7.91	22.7	8.16	22.7	8.28	22.7	8.41	22.6	8.66
		-11.8	-13.0	23.8	7.86	23.8	8.10	23.7	8.33	23.7	8.45	23.7	8.57	23.6	8.81
		-9.8	-11.0	24.9	8.05	24.9	8.28	24.8	8.51	24.8	8.62	24.8	8.73	24.7	8.96
		-9.5	-10.0	25.5	8.15	25.5	8.37	25.4	8.59	25.4	8.70	25.4	8.81	25.3	9.03
		-8.5	-9.1	26.1	8.24	26.0	8.45	26.0	8.67	26.0	8.78	25.9	8.88	25.9	9.10
		-7.0	-7.6	27.1	8.38	27.0	8.59	26.9	8.79	26.9	8.90	26.9	9.00	26.1	8.84
		-5.0	-5.6	28.4	8.56	28.4	8.76	28.3	8.96	28.3	9.06	28.1	9.05	26.1	8.32
		-3.0	-3.7	29.8	8.74	29.8	8.92	29.7	9.11	29.0	8.88	28.1	8.53	26.1	7.85
		0.0	-0.7	32.3	8.99	31.9	9.04	30.0	8.40	29.0	8.08	28.1	7.77	26.1	7.16
		3.0	2.2	33.9	8.84	31.9	8.25	30.0	7.67	29.0	7.38	28.1	7.10	26.1	6.55
		5.0	4.1	33.9	8.32	31.9	7.77	30.0	7.23	29.0	6.96	28.1	6.70	26.1	6.19
		7.0	6.0	33.9	7.84	31.9	7.32	30.0	6.82	29.0	6.57	28.1	6.33	26.1	5.86
		9.0	7.9	33.9	7.39	31.9	6.91	30.0	6.44	29.0	6.21	28.1	5.99	26.1	5.54
		11.0	9.8	33.9	6.97	31.9	6.53	30.0	6.09	29.0	5.88	28.1	5.67	26.1	5.25
		13.0	11.8	33.9	6.57	31.9	6.15	30.0	5.75	29.0	5.55	28.1	5.35	26.1	4.97
		15.0	13.7	33.9	6.21	31.9	5.83	30.0	5.45	29.0	5.26	28.1	5.08	26.1	4.72
70%	210 (23.45)	-19.8	-20.0	20.6	7.81	20.6	8.05	20.5	8.28	20.5	8.40	20.5	8.52	20.4	8.76
		-18.8	-19.0	21.0	7.88	20.9	8.12	20.9	8.35	20.9	8.47	20.9	8.59	20.8	8.82
		-16.7	-17.0	21.8	8.04	21.8	8.27	21.7	8.50	21.7	8.61	21.7	8.72	21.6	8.95
		-13.7	-15.0	22.7	8.21	22.7	8.43	22.6	8.64	22.6	8.75	22.6	8.86	22.5	9.08
		-11.8	-13.0	23.7	8.38	23.7	8.59	23.6	8.79	23.6	8.90	23.6	9.00	22.9	8.82
		-9.8	-11.0	24.8	8.55	24.8	8.75	24.7	8.95	24.7	9.04	24.6	9.08	22.9	8.34
		-9.5	-10.0	25.4	8.63	25.4	8.83	25.3	9.02	25.3	9.12	24.6	8.82	22.9	8.10
		-8.5	-9.1	26.0	8.71	25.9	8.90	25.9	9.09	25.4	8.94	24.6	8.58	22.9	7.89
		-7.0	-7.6	26.9	8.84	26.9	9.02	26.3	8.88	25.4	8.54	24.6	8.21	22.9	7.56
		-5.0	-5.6	28.3	9.00	27.9	9.00	26.3	8.36	25.4	8.04	24.6	7.73	22.9	7.12
		-3.0	-3.7	29.6	9.10	27.9	8.48	26.3	7.88	25.4	7.59	24.6	7.30	22.9	6.73
		0.0	-0.7	29.6	8.27	27.9	7.73	26.3	7.19	25.4	6.93	24.6	6.67	22.9	6.16
		3.0	2.2	29.6	7.56	27.9	7.06	26.3	6.58	25.4	6.35	24.6	6.12	22.9	5.66
		5.0	4.1	29.6	7.12	27.9	6.67	26.3	6.22	25.4	6.00	24.6	5.78	22.9	5.36
		7.0	6.0	29.6	6.72	27.9	6.30	26.3	5.88	25.4	5.68	24.6	5.47	22.9	5.08
		9.0	7.9	29.6	6.35	27.9	5.95	26.3	5.57	25.4	5.37	24.6	5.19	22.9	4.81
		11.0	9.8	29.6	6.01	27.9	5.64	26.3	5.27	25.4	5.09	24.6	4.92	22.9	4.57
		13.0	11.8	29.6	5.67	27.9	5.33	26.3	4.99	25.4	4.82	24.6	4.66	22.9	4.33
		15.0	13.7	29.6	5.38	27.9	5.05	26.3	4.74	25.4	4.58	24.6	4.43	22.9	4.12
60%	180 (20.10)	-19.8	-20.0	20.5	8.41	20.5	8.61	20.4	8.82	20.4	8.92	20.4	9.02	19.6	8.71
		-18.8	-19.0	20.9	8.47	20.8	8.67	20.8	8.88	20.8	8.98	20.8	9.08	19.6	8.52
		-16.7	-17.0	21.7	8.61	21.6	8.80	21.6	9.00	21.6	9.10	21.1	8.86	19.6	8.14
		-13.7	-15.0	22.6	8.75	22.5	8.94	22.5	9.12	21.8	8.77	21.1	8.43	19.6	7.75
		-11.8	-13.0	23.6	8.90	23.6	9.08	22.5	8.64	21.8	8.32	21.1	7.99	19.6	7.36
		-9.8	-11.0	24.7	9.05	23.9	8.80	22.5	8.18	21.8	7.87	21.1	7.57	19.6	6.97
		-9.5	-10.0	25.3	9.12	23.9	8.55	22.5	7.95	21.8	7.65	21.1	7.36	19.6	6.79
		-8.5	-9.1	25.4	8.93	23.9	8.33	22.5	7.74	21.8	7.46	21.1	7.17	19.6	6.62
		-7.0	-7.6	25.4	8.54	23.9	7.97	22.5	7.41	21.8	7.14	21.1	6.87	19.6	6.35
		-5.0	-5.6	25.4	8.04	23.9	7.51	22.5	6.99	21.8	6.74	21.1	6.49	19.6	6.00
		-3.0	-3.7	25.4	7.58	23.9	7.09	22.5	6.61	21.8	6.37	21.1	6.14	19.6	5.68
		0.0	-0.7	25.4	6.92	23.9	6.48	22.5	6.05	21.8	5.84	21.1	5.63	19.6	5.22
		3.0	2.2	25.4	6.34	23.9	5.95	22.5	5.56	21.8	5.37	21.1	5.18	19.6	4.81
		5.0	4.1	25.4	6.00	23.9	5.63	22.5	5.26	21.8	5.09	21.1	4.91	19.6	4.56
		7.0	6.0	25.4	5.67	23.9	5.33	22.5	4.99	21.8	4.82	21.1	4.66	19.6	4.33
		9.0	7.9	25.4	5.37	23.9	5.05	22.5	4.73	21.8	4.58	21.1	4.42	19.6	4.12
		11.0	9.8	25.4	5.09	23.9	4.79	22.5	4.49	21.8	4.35	21.1	4.20	19.6	3.92
		13.0	11.8	25.4	4.82	23.9	4.54	22.5	4.26	21.8	4.12	21.1	3.99	19.6	3.72
		15.0	13.7	25.4	4.58	23.9	4.31	22.5	4.05	21.8	3.93	21.1	3.80	19.6	3.55
50%	15 (16.75)	-19.8	-20.0	20.4	9.01	20.0	8.89	18.8	8.26	18.1	7.95	17.5	7.64	16.3	7.04
		-18.8	-19.0	20.8	9.06	20.0	8.70	18.8	8.09	18.1	7.78	17.5	7.48	16.3	6.90
		-16.7	-17.0	21.2	8.91	20.0	8.31	18.8	7.73	18.1	7.44	17.5	7.16	16.3	6.60
		-13.7	-15.0	21.2	8.48	20.0	7.91	18.8	7.36	18.1	7.09	17.5	6.82	16.3	6.30
		-11.8	-13.0	21.2	8.04	20.0	7.51	18.8	6.99	18.1	6.74	17.5	6.49	16.3	6.00
		-9.8	-11.0	21.2	7.61	20.0	7.11	18.8	6.63	18.1	6.39	17.5	6.16	16.3	5.70
		-9.5	-10.0	21.2	7.40	20.0	6.92	18.8	6.45	18.1	6.22	17.5	6.00	16.3	5.55
		-8.5	-9.1	21.2	7.21	20.0	6.75	18.8	6.30	18.1	6.07	17.5	5.85	16.3	5.42
		-7.0	-7.6	21.2	6.91	20.0	6.47	18.8	6.04	18.1	5.83	17.5	5.62	16.3	5.21
		-5.0	-5.6	21.2	6.52	20.0	6.11	18.8	5.71	18.1	5.51	17.5	5.32	16.3	4.93
		-3.0	-3.7	21.2	6.17	20.0	5.79	18.8	5.41	18.1	5.23	17.5	5.05	16.3	4.69
		0.0	-0.7	21.2	5.66	20.0	5.31	18.8	4.98	18.1	4.81	17.5	4.64	16.3	4.32
		3.0	2.2	21.2	5.21	20.0	4.90	18.8	4.59	18.1	4.44	17.5	4.29	16.3	4.00
		5.0	4.1	21.2	4.93	20.0	4.64	18.8	4.36	18.1	4.22	17.5	4.08	16.3	3.81
		7.0	6.0	21.2	4.68	20.0	4.41	18.8	4.14	18.1	4.01	17.5	3.88	16.3	3.62
		9.0	7.9	21.2	4.44	20.0	4.19	18.8	3.94	18.1	3.82	17.5	3.69	16.3	3.45
		11.0	9.8	21.2	4.22	20.0	3.99	18.8	3.75	18.1	3.64	17.5	3.52	16.3	3.29
		13.0	11.8	21.2	4.01	20.0	3.79	18.8	3.57	18.1	3.46	17.5	3.35	16.3	3.14
		15.0	13.7	21.2	3.82	20.0	3.61	18.8	3.40	18.1	3.30	17.5	3.20	16.3	3.00

3TW60652-1(2)

5 Capacity tables

5 - 2 Heating Capacity Tables

REYAQ14P

TC: Total Capacity: kW ; PI: Power Input: kW (compressor + outdoor fan motor)

Combination (%)	Capacity index (kW)	Outdoor air temp.		Indoor air temperature: °CDB											
				16.0		18.0		20.0		21.0		22.0		24.0	
				TC	PI	TC	PI	TC	PI	TC	PI	TC	PI	TC	PI
		°CDB	°CWB	kW	kW	kW	kW	kW	kW	kW	kW	kW	kW	kW	kW
130	260	-19.8	-20.0	27.0	6.23	26.9	6.78	26.8	7.34	26.8	7.61	26.7	7.89	26.6	8.44
	(29.12)	-18.8	-19.0	27.5	6.42	27.4	6.96	27.3	7.50	27.3	7.77	27.2	8.04	27.1	8.58
		-16.7	-17.0	28.6	6.79	28.5	7.31	28.4	7.83	28.3	8.09	28.3	8.35	28.2	8.87
		-13.7	-15.0	29.8	7.18	29.7	7.68	29.6	8.18	29.5	8.42	29.4	8.67	29.3	9.17
		-11.8	-13.0	31.1	7.57	31.0	8.04	30.8	8.52	30.8	8.76	30.7	9.00	30.6	9.47
		-9.8	-11.0	32.5	7.96	32.4	8.41	32.3	8.86	32.2	9.09	32.2	9.32	32.1	9.77
		-9.5	-10.0	33.2	8.15	33.1	8.59	33.0	9.03	33.0	9.26	32.9	9.48	32.8	9.92
		-8.5	-9.1	33.9	8.32	33.8	8.75	33.7	9.19	33.7	9.40	33.6	9.62	33.5	10.1
		-7.0	-7.6	35.2	8.60	35.1	9.02	34.9	9.44	34.9	9.64	34.8	9.85	34.7	10.3
		-5.0	-5.6	36.9	8.97	36.8	9.36	36.7	9.76	36.6	9.96	36.6	10.2	36.5	10.6
		-3.0	-3.7	38.7	9.30	38.5	9.68	38.4	10.1	38.4	10.2	38.3	10.4	38.2	10.8
		0.0	-0.7	41.7	9.81	41.6	10.2	41.4	10.5	41.4	10.7	41.3	10.9	41.2	11.2
		3.0	2.2	44.8	10.3	44.7	10.6	44.6	10.9	44.6	11.1	44.5	11.2	44.4	11.6
		5.0	4.1	47.0	10.5	46.9	10.8	46.8	11.2	46.8	11.3	46.7	11.5	46.6	11.8
		7.0	6.0	49.3	10.8	49.2	11.1	49.1	11.4	49.1	11.5	49.0	11.7	48.9	12.0
		9.0	7.9	51.7	11.1	51.6	11.3	51.5	11.6	51.5	11.8	51.4	11.9	51.0	12.0
		11.0	9.8	54.3	11.3	54.2	11.6	54.1	11.8	54.0	12.0	54.0	12.1	51.0	11.4
		13.0	11.8	57.0	11.5	56.9	11.8	56.8	12.0	56.6	12.1	54.7	11.6	51.0	10.7
		15.0	13.7	59.8	11.7	59.7	12.0	58.5	11.9	56.6	11.4	54.7	11.0	51.0	10.1
120	240	-19.8	-20.0	26.9	6.98	26.8	7.49	26.7	7.99	26.7	8.25	26.6	8.50	26.5	9.01
	(26.88)	-18.8	-19.0	27.4	7.15	27.3	7.65	27.2	8.14	27.1	8.39	27.1	8.64	27.0	9.14
		-16.7	-17.0	28.4	7.50	28.3	7.97	28.3	8.45	28.2	8.69	28.2	8.93	28.1	9.41
		-13.7	-15.0	29.6	7.85	29.5	8.31	29.4	8.77	29.4	9.00	29.3	9.23	29.2	9.69
		-11.8	-13.0	30.9	8.21	30.8	8.65	30.7	9.09	30.7	9.31	30.6	9.53	30.5	9.97
		-9.8	-11.0	32.3	8.57	32.2	8.99	32.1	9.41	32.1	9.62	32.0	9.83	32.0	10.2
		-9.5	-10.0	33.1	8.75	33.0	9.16	32.9	9.56	32.8	9.77	32.8	9.97	32.7	10.4
		-8.5	-9.1	33.8	8.91	33.7	9.31	33.6	9.71	33.6	9.91	33.5	10.1	33.4	10.5
		-7.0	-7.6	35.0	9.17	34.9	9.55	34.8	9.94	34.8	10.1	34.7	10.3	34.6	10.7
		-5.0	-5.6	36.8	9.50	36.7	9.87	36.6	10.2	36.5	10.4	36.5	10.6	36.4	11.0
		-3.0	-3.7	38.5	9.81	38.4	10.2	38.3	10.5	38.3	10.7	38.2	10.9	38.1	11.2
		0.0	-0.7	41.5	10.3	41.4	10.6	41.3	10.9	41.3	11.1	41.2	11.2	41.1	11.6
		3.0	2.2	44.7	10.7	44.6	11.0	44.5	11.3	44.4	11.4	44.4	11.6	44.3	11.9
		5.0	4.1	46.9	11.0	46.8	11.2	46.7	11.5	46.6	11.7	46.6	11.8	46.5	12.1
		7.0	6.0	49.2	11.2	49.1	11.5	49.0	11.7	48.9	11.9	48.9	12.0	47.1	11.6
		9.0	7.9	51.6	11.4	51.5	11.7	51.4	12.0	51.4	12.1	50.5	11.9	47.1	10.9
		11.0	9.8	54.1	11.7	54.0	11.9	53.9	12.1	52.3	11.7	50.5	11.2	47.1	10.3
		13.0	11.8	56.9	11.9	56.8	12.1	54.0	11.4	52.3	11.0	50.5	10.6	47.1	9.72
		15.0	13.7	59.7	12.1	57.5	11.6	54.0	10.8	52.3	10.4	50.5	9.98	47.1	9.19
110	220	-19.8	-20.0	26.8	7.72	26.7	8.19	26.6	8.65	26.5	8.89	26.5	9.12	26.4	9.59
	(24.64)	-18.8	-19.0	27.2	7.88	27.2	8.33	27.1	8.79	27.0	9.02	27.0	9.25	26.9	9.71
		-16.7	-17.0	28.3	8.20	28.2	8.64	28.1	9.08	28.1	9.30	28.0	9.52	28.0	9.95
		-13.7	-15.0	29.5	8.52	29.4	8.95	29.3	9.37	29.3	9.58	29.2	9.79	29.1	10.2
		-11.8	-13.0	30.8	8.85	30.7	9.26	30.6	9.66	30.6	9.86	30.5	10.1	30.4	10.5
		-9.8	-11.0	32.2	9.18	32.1	9.57	32.0	9.95	32.0	10.1	31.9	10.3	31.8	10.7
		-9.5	-10.0	32.9	9.35	32.9	9.72	32.8	10.1	32.7	10.3	32.7	10.5	32.6	10.8
		-8.5	-9.1	33.6	9.49	33.6	9.86	33.5	10.2	33.4	10.4	33.4	10.6	33.3	11.0
		-7.0	-7.6	34.9	9.73	34.8	10.1	34.7	10.4	34.7	10.6	34.6	10.8	34.5	11.1
		-5.0	-5.6	36.6	10.0	36.5	10.4	36.4	10.7	36.4	10.9	36.4	11.0	36.3	11.4
		-3.0	-3.7	38.4	10.3	38.3	10.6	38.2	11.0	38.2	11.1	38.1	11.3	38.0	11.6
		0.0	-0.7	41.4	10.8	41.3	11.0	41.2	11.3	41.2	11.5	41.1	11.6	41.0	11.9
		3.0	2.2	44.5	11.1	44.4	11.4	44.4	11.7	44.3	11.8	44.3	12.0	43.1	11.8
		5.0	4.1	46.7	11.4	46.6	11.6	46.6	11.9	46.5	12.0	46.3	12.1	43.1	11.1
		7.0	6.0	49.0	11.6	49.0	11.8	48.9	12.1	47.9	11.9	46.3	11.4	43.1	10.5
		9.0	7.9	51.5	11.8	51.4	12.0	49.5	11.6	47.9	11.2	46.3	10.7	43.1	9.87
		11.0	9.8	54.0	12.0	52.7	11.8	49.5	11.0	47.9	10.5	46.3	10.1	43.1	9.32
		13.0	11.8	55.9	11.9	52.7	11.1	49.5	10.3	47.9	9.92	46.3	9.54	43.1	8.79
		15.0	13.7	55.9	11.2	52.7	10.5	49.5	9.74	47.9	9.38	46.3	9.02	43.1	8.32
100	200	-19.8	-20.0	26.6	8.47	26.5	8.89	26.5	9.31	26.4	9.53	26.4	9.74	26.3	10.2
	(22.40)	-18.8	-19.0	27.1	8.61	27.0	9.02	26.9	9.44	26.9	9.65	26.9	9.85	26.8	10.3
		-16.7	-17.0	28.2	8.90	28.1	9.30	28.0	9.70	28.0	9.90	27.9	10.1	27.8	10.5
		-13.7	-15.0	29.3	9.20	29.3	9.58	29.2	9.96	29.1	10.2	29.1	10.3	29.0	10.7
		-11.8	-13.0	30.6	9.50	30.6	9.86	30.5	10.2	30.4	10.4	30.4	10.6	30.3	11.0
		-9.8	-11.0	32.1	9.80	32.0	10.1	31.9	10.5	31.9	10.7	31.8	10.8	31.7	11.2
		-9.5	-10.0	32.8	9.94	32.7	10.3	32.6	10.6	32.6	10.8	32.6	11.0	32.5	11.3
		-8.5	-9.1	33.5	10.1	33.4	10.4	33.4	10.7	33.3	10.9	33.3	11.1	33.2	11.4
		-7.0	-7.6	34.7	10.3	34.7	10.6	34.6	10.9	34.5	11.1	34.5	11.3	34.4	11.6
		-5.0	-5.6	36.5	10.6	36.4	10.9	36.3	11.2	36.3	11.3	36.2	11.5	36.2	11.8
		-3.0	-3.7	38.2	10.8	38.2	11.1	38.1	11.4	38.0	11.6	38.0	11.7	37.9	12.0
		0.0	-0.7	41.2	11.2	41.2	11.5	41.1	11.8	41.0	11.9	41.0	12.0	39.2	11.5
		3.0	2.2	44.4	11.6	44.3	11.8	44.2	12.1	43.6	11.9	42.1	11.4	39.2	10.5
		5.0	4.1	46.6	11.8	46.5	12.0	45.0	11.7	43.6	11.2	42.1	10.8	39.2	9.91
		7.0	6.0	48.9	12.0	47.9	11.9	45.0	11.0	43.6	10.6	42.1	10.2	39.2	9.36
		9.0	7.9	50.8	12.0	47.9	11.2	45.0	10.4	43.6	9.98	42.1	9.60	39.2	8.84
		11.0	9.8	50.8	11.3	47.9	10.5	45.0	9.79	43.6	9.43	42.1	9.07	39.2	8.36
		13.0	11.8	50.8	10.6	47.9	9.92	45.0	9.23	43.6	8.89	42.1	8.55	39.2	7.90
		15.0	13.7	50.8	10.0	47.9	9.37	45.0	8.73	43.6	8.41	42.1	8.10	39.2	7.49

3TW60652-1(1)

NOTES - ANMERKUNGEN - Σημειώσεις - NOTAS - REMARQUES - NOTE - OPMERKINGEN - примечания - NOTLAR

1 is shown as reference. When selecting the unit models, avoid the Outdoor air temperature range shown by .

dient als Verweis. Vermeiden Sie bei der Auswahl der Gerätemodelle den als markierten Temperaturbereich der Außenluft

Η είναι ενδεικτική. κατά την επιλογή των μοντέλων των μονάδων, αποφύγετε το εύρος θερμοκρασίας εξωτερικού αέρα που υποδεικνύεται

se muestra como referencia. Cuando seleccione los modelos de unidad, evite el intervalo de temperaturas del aire exterior indicado mediante

est montré comme référence.Lors du choix des modèles d'unités, évitez la plage de températures de l'air extérieur illustré par

valori riportati unicamente come riferimento. Nel selezionare i modelli delle unità, non considerare i valori di temperatura dell'aria esterna indicati con il colore

is als referentie getoond. Wanneer modellen van eenheden worden gekozen, vermijd dan het bereik van buitenluchttemperaturen geïllustreerd door

показан как. При выборе модели устройства избегайте внешнюю температуру воздуха, указанную в

referans olarak gösterilmektedir. Ünite modellerini seçerken, belirtilen Dış hava sıcaklığı aralığından kaçının

2 The above table shows the average value of conditions which may occur.

Die obige Tabelle zeigt den Durchschnittswert der Bedingungen, die auftreten können.

Στον παραπάνω πίνακα αναγράφεται η μέση τιμή για συνθήκες που μπορεί να προκύψουν.

La tabla de arriba muestra el valor medio de condiciones que pueden ocurrir.

Le tableau ci-dessus donne la valeur moyenne pour des conditions qui peuvent survenir.

La tabella in alto mostra il valore delle condizioni medie che si possono riscontrare.

De tabel hierboven geeft de gemiddelde waarde aan van situaties die kunnen voorvallen.

Таблица расположенная выше показывает среднее значение условий, которые могут наступить.

Yukarıdaki tablo meydana gelebilecek koşulların ortalama değerini göstermektedir.

5 Capacity tables

5 - 2 Heating Capacity Tables

REYAQ14P

TC: Total Capacity: kW ; PI: Power Input: kW (compressor + outdoor fan motor)

Combination (%)	Capacity index (kW)	Outdoor air temp.		Indoor air temperature: °CDB											
				16.0		18.0		20.0		21.0		22.0		24.0	
				TC	PI	TC	PI	TC	PI	TC	PI	TC	PI	TC	PI
		°CDB	°CWB	kW	kW	kW	kW	kW	kW	kW	kW	kW	kW	kW	kW
90%	315 (36.00)	-19.8	-20.0	26.5	9.21	26.4	9.59	26.3	9.97	26.3	10.2	26.3	10.4	26.2	10.7
		-18.8	-19.0	27.0	9.34	26.9	9.71	26.8	10.1	26.8	10.3	26.8	10.5	26.7	10.8
		-16.7	-17.0	28.0	9.60	28.0	9.96	27.9	10.3	27.8	10.5	27.8	10.7	27.7	11.0
		-13.7	-15.0	29.2	9.87	29.1	10.2	29.1	10.6	29.0	10.7	29.0	10.9	28.9	11.2
		-11.8	-13.0	30.5	10.1	30.4	10.5	30.4	10.8	30.3	11.0	30.3	11.1	30.2	11.5
		-9.8	-11.0	31.9	10.4	31.8	10.7	31.8	11.0	31.7	11.2	31.7	11.4	31.6	11.7
		-9.5	-10.0	32.7	10.5	32.6	10.8	32.5	11.2	32.5	11.3	32.5	11.5	32.4	11.8
		-8.5	-9.1	33.4	10.7	33.3	11.0	33.2	11.3	33.2	11.4	33.2	11.6	33.1	11.9
		-7.0	-7.6	34.6	10.9	34.5	11.1	34.5	11.4	34.4	11.6	34.4	11.7	34.3	12.0
		-5.0	-5.6	36.3	11.1	36.3	11.4	36.2	11.7	36.2	11.8	36.1	11.9	35.3	11.8
		-3.0	-3.7	38.1	11.3	38.0	11.6	38.0	11.9	37.9	12.0	37.9	12.1	35.3	11.1
		0.0	-0.7	41.1	11.7	41.0	11.9	40.5	12.0	39.2	11.5	37.9	11.0	35.3	10.2
		3.0	2.2	44.3	12.0	43.1	11.8	40.5	10.9	39.2	10.5	37.9	10.1	35.3	9.29
		5.0	4.1	45.7	11.9	43.1	11.1	40.5	10.3	39.2	9.91	37.9	9.53	35.3	8.78
		7.0	6.0	45.7	11.2	43.1	10.5	40.5	9.71	39.2	9.35	37.9	9.00	35.3	8.30
		9.0	7.9	45.7	10.6	43.1	9.86	40.5	9.17	39.2	8.84	37.9	8.51	35.3	7.85
		11.0	9.8	45.7	9.97	43.1	9.31	40.5	8.67	39.2	8.36	37.9	8.05	35.3	7.44
		13.0	11.8	45.7	9.39	43.1	8.78	40.5	8.19	39.2	7.89	37.9	7.60	35.3	7.04
		15.0	13.7	45.7	8.89	43.1	8.31	40.5	7.76	39.2	7.48	37.9	7.21	35.3	6.68
80%	280 (32.00)	-19.8	-20.0	26.3	9.95	26.3	10.3	26.2	10.6	26.2	10.8	26.2	11.0	26.1	11.3
		-18.8	-19.0	26.8	10.1	26.8	10.4	26.7	10.7	26.7	10.9	26.6	11.1	26.6	11.4
		-16.7	-17.0	27.9	10.3	27.8	10.6	27.8	10.9	27.7	11.1	27.7	11.3	27.6	11.6
		-13.7	-15.0	29.1	10.5	29.0	10.8	28.9	11.2	28.9	11.3	28.9	11.5	28.8	11.8
		-11.8	-13.0	30.4	10.8	30.3	11.1	30.2	11.4	30.2	11.5	30.2	11.7	30.1	12.0
		-9.8	-11.0	31.8	11.0	31.7	11.3	31.7	11.6	31.6	11.7	31.6	11.9	31.4	12.0
		-9.5	-10.0	32.5	11.1	32.5	11.4	32.4	11.7	32.4	11.8	32.3	12.0	31.4	11.7
		-8.5	-9.1	33.2	11.2	33.2	11.5	33.1	11.8	33.1	11.9	33.0	12.0	31.4	11.4
		-7.0	-7.6	34.5	11.4	34.4	11.7	34.3	11.9	34.3	12.1	33.7	11.9	31.4	10.9
		-5.0	-5.6	36.2	11.6	36.1	11.9	36.0	12.1	34.8	11.6	33.7	11.2	31.4	10.3
		-3.0	-3.7	38.0	11.9	37.9	12.1	36.0	11.4	34.8	11.0	33.7	10.5	31.4	9.69
		0.0	-0.7	40.6	12.0	38.3	11.2	36.0	10.4	34.8	10.0	33.7	9.61	31.4	8.86
		3.0	2.2	40.6	11.0	38.3	10.2	36.0	9.51	34.8	9.16	33.7	8.81	31.4	8.13
		5.0	4.1	40.6	10.3	38.3	9.65	36.0	8.98	34.8	8.65	33.7	8.33	31.4	7.69
		7.0	6.0	40.6	9.75	38.3	9.11	36.0	8.49	34.8	8.18	33.7	7.88	31.4	7.29
		9.0	7.9	40.6	9.21	38.3	8.61	36.0	8.03	34.8	7.74	33.7	7.46	31.4	6.91
		11.0	9.8	40.6	8.70	38.3	8.15	36.0	7.60	34.8	7.34	33.7	7.07	31.4	6.55
		13.0	11.8	40.6	8.21	38.3	7.70	36.0	7.19	34.8	6.94	33.7	6.69	31.4	6.21
		15.0	13.7	40.6	7.78	38.3	7.30	36.0	6.82	34.8	6.59	33.7	6.36	31.4	5.90
70%	245 (28.00)	-19.8	-20.0	26.2	10.7	26.1	11.0	26.1	11.3	26.1	11.4	26.0	11.6	26.0	11.9
		-18.8	-19.0	26.7	10.8	26.6	11.1	26.6	11.4	26.5	11.5	26.5	11.7	26.5	12.0
		-16.7	-17.0	27.7	11.0	27.7	11.3	27.6	11.6	27.6	11.7	27.6	11.8	27.5	12.1
		-13.7	-15.0	28.9	11.2	28.9	11.5	28.8	11.7	28.8	11.9	28.8	12.0	27.5	11.5
		-11.8	-13.0	30.2	11.4	30.2	11.7	30.1	11.9	30.1	12.1	29.5	11.8	27.5	10.9
		-9.8	-11.0	31.6	11.6	31.6	11.9	31.5	12.1	30.5	11.6	29.5	11.2	27.5	10.3
		-9.5	-10.0	32.4	11.7	32.3	12.0	31.5	11.8	30.5	11.3	29.5	10.9	27.5	9.98
		-8.5	-9.1	33.1	11.8	33.0	12.1	31.5	11.4	30.5	11.0	29.5	10.6	27.5	9.73
		-7.0	-7.6	34.3	12.0	33.5	11.8	31.5	10.9	30.5	10.5	29.5	10.1	27.5	9.32
		-5.0	-5.6	35.5	11.9	33.5	11.1	31.5	10.3	30.5	9.92	29.5	9.54	27.5	8.79
		-3.0	-3.7	35.5	11.2	33.5	10.5	31.5	9.74	30.5	9.37	29.5	9.02	27.5	8.32
		0.0	-0.7	35.5	10.2	33.5	9.56	31.5	8.90	30.5	8.57	29.5	8.25	27.5	7.63
		3.0	2.2	35.5	9.37	33.5	8.76	31.5	8.17	30.5	7.88	29.5	7.59	27.5	7.02
		5.0	4.1	35.5	8.85	33.5	8.28	31.5	7.73	30.5	7.45	29.5	7.19	27.5	6.66
		7.0	6.0	35.5	8.37	33.5	7.84	31.5	7.32	30.5	7.06	29.5	6.81	27.5	6.32
		9.0	7.9	35.5	7.92	33.5	7.42	31.5	6.94	30.5	6.70	29.5	6.46	27.5	6.00
		11.0	9.8	35.5	7.50	33.5	7.04	31.5	6.58	30.5	6.36	29.5	6.14	27.5	5.70
		13.0	11.8	35.5	7.09	33.5	6.66	31.5	6.23	30.5	6.03	29.5	5.82	27.5	5.41
		15.0	13.7	35.5	6.73	33.5	6.33	31.5	5.93	30.5	5.73	29.5	5.54	27.5	5.16
60%	210 (24.00)	-19.8	-20.0	26.1	11.4	26.0	11.7	26.0	12.0	25.9	12.1	25.3	11.7	23.5	10.8
		-18.8	-19.0	26.5	11.5	26.5	11.8	26.5	12.0	26.1	11.9	25.3	11.5	23.5	10.5
		-16.7	-17.0	27.6	11.7	27.6	11.9	27.0	11.8	26.1	11.4	25.3	10.9	23.5	10.0
		-13.7	-15.0	28.8	11.9	28.7	12.1	27.0	11.2	26.1	10.8	25.3	10.4	23.5	9.55
		-11.8	-13.0	30.1	12.1	28.7	11.5	27.0	10.6	26.1	10.2	25.3	9.84	23.5	9.07
		-9.8	-11.0	30.5	11.6	28.7	10.8	27.0	10.1	26.1	9.69	25.3	9.32	23.5	8.59
		-9.5	-10.0	30.5	11.3	28.7	10.5	27.0	9.79	26.1	9.42	25.3	9.06	23.5	8.36
		-8.5	-9.1	30.5	11.0	28.7	10.3	27.0	9.54	26.1	9.19	25.3	8.84	23.5	8.16
		-7.0	-7.6	30.5	10.5	28.7	9.82	27.0	9.14	26.1	8.80	25.3	8.47	23.5	7.82
		-5.0	-5.6	30.5	9.91	28.7	9.26	27.0	8.63	26.1	8.31	25.3	8.01	23.5	7.40
		-3.0	-3.7	30.5	9.37	28.7	8.76	27.0	8.16	26.1	7.87	25.3	7.58	23.5	7.02
		0.0	-0.7	30.5	8.57	28.7	8.02	27.0	7.49	26.1	7.23	25.3	6.97	23.5	6.46
		3.0	2.2	30.5	7.87	28.7	7.38	27.0	6.90	26.1	6.66	25.3	6.43	23.5	5.96
		5.0	4.1	30.5	7.45	28.7	6.99	27.0	6.54	26.1	6.32	25.3	6.10	23.5	5.67
		7.0	6.0	30.5	7.06	28.7	6.63	27.0	6.21	26.1	6.00	25.3	5.79	23.5	5.39
		9.0	7.9	30.5	6.69	28.7	6.29	27.0	5.90	26.1	5.70	25.3	5.51	23.5	5.13
		11.0	9.8	30.5	6.35	28.7	5.98	27.0	5.61	26.1	5.42	25.3	5.24	23.5	4.89
		13.0	11.8	30.5	6.02	28.7	5.67	27.0	5.32	26.1	5.15	25.3	4.98	23.5	4.65
		15.0	13.7	30.5	5.73	28.7	5.40	27.0	5.07	26.1	4.91	25.3	4.75	23.5	4.44
50%	175 (20.00)	-19.8	-20.0	25.4	11.8	23.9	11.0	22.5	10.2	21.8	9.83	21.1	9.45	19.6	8.71
		-18.8	-19.0	25.4	11.5	23.9	10.7	22.5	9.99	21.8	9.61	21.1	9.24	19.6	8.52
		-16.7	-17.0	25.4	11.0	23.9	10.2	22.5	9.53	21.8	9.18	21.1	8.83	19.6	8.15
		-13.7	-15.0	25.4	10.4	23.9	9.75	22.5	9.07	21.8	8.74	21.1	8.41	19.6	7.77
		-11.8	-13.0	25.4	9.90	23.9	9.25	22.5	8.61	21.8	8.30	21.1	7.99	19.6	7.39
		-9.8	-11.0	25.4	9.37	23.9	8.76	22.5	8.17	21.8	7.88	21.1	7.59	19.6	7.02
		-9.5	-10.0	25.4	9.12	23.9	8.53	22.5	7.95	21.8	7.67	21.1	7.39	19.6	6.84
		-8.5	-9.1	25.4	8.89	23.9	8.32	22.5	7.76	21.8	7.49	21.1	7.21	19.6	6.68
		-7.0	-7.6	25.4	8.52	23.9	7.98	22.5	7.45	21.8	7.19	21.1	6.93	19.6	6.42
		-5.0	-5.6	25.4	8.05	23.9	7.54	22.5	7.05	21.8	6.81	21.1	6.56	19.6	6.09
		-3.0	-3.7	25.4	7.63	23.9	7.15	22.5	6.69	21.8	6.46	21.1	6.24	19.6	5.79
		0.0	-0.7	25.4	7.00	23.9	6.58	22.5	6.16	21.8	5.96	21.1	5.75	19.6	5.35
		3.0	2.2	25.4	6.46	23.9	6.07	22.5	5.70	21.8	5.51	21.1	5.33	19.6	4.96
		5.0	4.1	25.4	6.13	23.9	5.77	22.5	5.42	21.8	5.24	21.1	5.07	19.6	4.73
		7.0	6.0	25.4	5.82	23.9	5.49	22.5	5.15	21.8	4.99	21.1	4.83	19.6	4.51
		9.0	7.9	25.4	5.54	23.9	5.22	22.5	4.91	21.8	4.76	21.1	4.60	19.6	4.30
		11.0	9.8	25.4	5.27	23.9	4.97	22.5	4.68	21.8	4.54	21.1	4.39	19.6	4.11
		13.0	11.8	25.4	5.01	23.9	4.73	22.5	4.46	21.8	4.32	21.1	4.19	19.6	3.92
		15.0	13.7	25.4	4.78	23.9	4.52	22.5	4.26	21.8	4.13	21.1	4.00	19.6	3.75

3TW60652-1(2)

5 Capacity tables

5 - 2 Heating Capacity Tables

REYAQ16P

TC: Total Capacity: kW ; PI: Power Input: kW (compressor + outdoor fan motor)

Combination (%)	Capacity index (kW)	Outdoor air temp.		Indoor air temperature: °CDB											
				16.0		18.0		20.0		21.0		22.0		24.0	
				TC	PI	TC	PI	TC	PI	TC	PI	TC	PI	TC	PI
		°CDB	°CWB	kW	kW	kW	kW	kW	kW	kW	kW	kW	kW	kW	kW
130	520	-19.8	-20.0	31.3	8.42	31.2	9.07	31.0	9.72	31.0	10.0	30.9	10.4	30.8	11.0
	(58.50)	-18.8	-19.0	31.9	8.64	31.7	9.28	31.6	9.91	31.6	10.2	31.5	10.6	31.4	11.2
		-16.7	-17.0	33.1	9.10	33.0	9.71	32.9	10.3	32.8	10.6	32.8	10.9	32.7	11.5
		-13.7	-15.0	34.5	9.56	34.4	10.1	34.3	10.7	34.2	11.0	34.2	11.3	34.1	11.9
		-11.8	-13.0	36.1	10.0	36.0	10.6	35.8	11.1	35.8	11.4	35.7	11.7	35.6	12.3
		-9.8	-11.0	37.8	10.5	37.6	11.0	37.5	11.6	37.5	11.8	37.4	12.1	37.3	12.6
		-9.5	-10.0	38.7	10.7	38.5	11.2	38.4	11.8	38.4	12.0	38.3	12.3	38.2	12.8
		-8.5	-9.1	39.5	10.9	39.4	11.4	39.3	11.9	39.2	12.2	39.2	12.5	39.0	13.0
		-7.0	-7.6	41.0	11.3	40.8	11.8	40.7	12.2	40.7	12.5	40.6	12.7	40.5	13.2
		-5.0	-5.6	43.0	11.7	42.9	12.2	42.8	12.6	42.8	12.9	42.7	13.1	42.6	13.6
		-3.0	-3.7	45.1	12.1	45.0	12.5	44.9	13.0	44.9	13.2	44.8	13.4	44.7	13.9
		0.0	-0.7	48.7	12.7	48.6	13.1	48.5	13.5	48.4	13.7	48.4	13.9	48.3	14.3
		3.0	2.2	52.5	13.2	52.4	13.6	52.3	14.0	52.2	14.2	52.1	14.4	52.0	14.8
		5.0	4.1	55.1	13.6	55.0	13.9	54.9	14.3	54.8	14.5	54.8	14.7	54.7	15.0
		7.0	6.0	57.9	13.9	57.8	14.2	57.6	14.6	57.6	14.7	57.5	14.9	56.6	14.9
		9.0	7.9	60.8	14.2	60.6	14.5	60.5	14.8	60.5	15.0	60.4	15.2	56.6	14.0
		11.0	9.8	63.8	14.5	63.7	14.8	63.5	15.1	62.9	15.0	60.8	14.4	56.6	13.2
		13.0	11.8	67.1	14.7	67.0	15.0	65.0	14.7	62.9	14.1	60.8	13.5	56.6	12.4
		15.0	13.7	70.4	15.0	69.2	14.9	65.0	13.8	62.9	13.3	60.8	12.7	56.6	11.7
120	480	-19.8	-20.0	31.1	9.30	31.0	9.90	30.9	10.5	30.9	10.8	30.8	11.1	30.7	11.7
	(54.00)	-18.8	-19.0	31.7	9.50	31.6	10.1	31.5	10.7	31.4	11.0	31.4	11.3	31.3	11.9
		-16.7	-17.0	33.0	9.92	32.9	10.5	32.8	11.1	32.7	11.3	32.6	11.6	32.5	12.2
		-13.7	-15.0	34.4	10.4	34.3	10.9	34.2	11.4	34.1	11.7	34.1	12.0	33.9	12.5
		-11.8	-13.0	35.9	10.8	35.8	11.3	35.7	11.8	35.7	12.1	35.6	12.3	35.5	12.8
		-9.8	-11.0	37.6	11.2	37.5	11.7	37.4	12.2	37.3	12.4	37.3	12.7	37.2	13.2
		-9.5	-10.0	38.5	11.4	38.4	11.9	38.3	12.4	38.2	12.6	38.2	12.9	38.1	13.3
		-8.5	-9.1	39.3	11.6	39.2	12.1	39.1	12.6	39.1	12.8	39.0	13.0	38.9	13.5
		-7.0	-7.6	40.8	11.9	40.7	12.4	40.6	12.8	40.5	13.1	40.5	13.3	40.4	13.7
		-5.0	-5.6	42.9	12.3	42.8	12.8	42.7	13.2	42.6	13.4	42.6	13.6	42.5	14.0
		-3.0	-3.7	45.0	12.7	44.9	13.1	44.8	13.5	44.7	13.7	44.7	13.9	44.6	14.3
		0.0	-0.7	48.6	13.3	48.5	13.6	48.4	14.0	48.3	14.2	48.2	14.4	48.1	14.8
		3.0	2.2	52.3	13.8	52.2	14.1	52.1	14.5	52.1	14.6	52.0	14.8	51.9	15.1
		5.0	4.1	55.0	14.1	54.9	14.4	54.8	14.7	54.7	14.9	54.6	15.1	52.3	14.4
		7.0	6.0	57.7	14.4	57.6	14.7	57.5	15.0	57.5	15.1	56.1	14.8	52.3	13.5
		9.0	7.9	60.6	14.6	60.5	14.9	60.0	15.1	58.1	14.5	56.1	13.9	52.3	12.7
		11.0	9.8	63.6	14.9	63.5	15.2	60.0	14.2	58.1	13.6	56.1	13.1	52.3	12.0
		13.0	11.8	66.9	15.1	63.9	14.4	60.0	13.3	58.1	12.8	56.1	12.3	52.3	11.3
		15.0	13.7	67.7	14.5	63.9	13.5	60.0	12.5	58.1	12.1	56.1	11.6	52.3	10.7
110	440	-19.8	-20.0	31.0	10.2	30.9	10.7	30.8	11.3	30.7	11.5	30.7	11.8	30.6	12.4
	(49.50)	-18.8	-19.0	31.5	10.4	31.5	10.9	31.4	11.4	31.3	11.7	31.3	12.0	31.2	12.5
		-16.7	-17.0	32.8	10.7	32.7	11.3	32.6	11.8	32.6	12.0	32.5	12.3	32.4	12.8
		-13.7	-15.0	34.2	11.1	34.1	11.6	34.0	12.1	34.0	12.4	33.9	12.6	33.8	13.1
		-11.8	-13.0	35.8	11.5	35.7	12.0	35.6	12.5	35.5	12.7	35.5	13.0	35.4	13.4
		-9.8	-11.0	37.5	11.9	37.4	12.4	37.3	12.8	37.2	13.1	37.2	13.3	37.1	13.7
		-9.5	-10.0	38.4	12.1	38.3	12.6	38.2	13.0	38.1	13.2	38.1	13.4	38.0	13.9
		-8.5	-9.1	39.2	12.3	39.1	12.7	39.0	13.2	39.0	13.4	38.9	13.6	38.8	14.0
		-7.0	-7.6	40.7	12.6	40.6	13.0	40.5	13.4	40.4	13.6	40.4	13.8	40.3	14.2
		-5.0	-5.6	42.7	13.0	42.6	13.4	42.5	13.7	42.5	13.9	42.4	14.1	42.3	14.5
		-3.0	-3.7	44.8	13.3	44.7	13.7	44.6	14.0	44.6	14.2	44.5	14.4	44.4	14.8
		0.0	-0.7	48.4	13.8	48.3	14.2	48.2	14.5	48.2	14.7	48.1	14.8	47.9	15.1
		3.0	2.2	52.2	14.3	52.1	14.6	52.0	14.9	51.9	15.1	51.5	15.0	47.9	13.8
		5.0	4.1	54.8	14.5	54.7	14.8	54.6	15.2	53.2	14.7	51.5	14.1	47.9	13.0
		7.0	6.0	57.6	14.8	57.5	15.1	55.0	14.4	53.2	13.8	51.5	13.3	47.9	12.2
		9.0	7.9	60.5	15.1	58.5	14.6	55.0	13.5	53.2	13.0	51.5	12.5	47.9	11.5
		11.0	9.8	62.1	14.8	58.5	13.8	55.0	12.8	53.2	12.3	51.5	11.8	47.9	10.8
		13.0	11.8	62.1	13.9	58.5	12.9	55.0	12.0	53.2	11.5	51.5	11.1	47.9	10.2
		15.0	13.7	62.1	13.1	58.5	12.2	55.0	11.3	53.2	10.9	51.5	10.5	47.9	9.67
100	400	-19.8	-20.0	30.8	11.1	30.7	11.5	30.6	12.0	30.6	12.3	30.6	12.5	30.5	13.0
	(45.00)	-18.8	-19.0	31.4	11.2	31.3	11.7	31.2	12.2	31.2	12.4	31.1	12.7	31.0	13.2
		-16.7	-17.0	32.7	11.6	32.6	12.0	32.5	12.5	32.4	12.7	32.4	13.0	32.3	13.5
		-13.7	-15.0	34.1	11.9	34.0	12.4	33.9	12.8	33.8	13.1	33.8	13.3	33.7	13.7
		-11.8	-13.0	35.6	12.3	35.5	12.7	35.4	13.2	35.4	13.4	35.3	13.6	35.3	14.0
		-9.8	-11.0	37.3	12.7	37.2	13.1	37.1	13.5	37.1	13.7	37.0	13.9	36.9	14.3
		-9.5	-10.0	38.2	12.8	38.1	13.2	38.0	13.6	38.0	13.8	37.9	14.0	37.8	14.4
		-8.5	-9.1	39.0	13.0	38.9	13.4	38.9	13.8	38.8	14.0	38.8	14.2	38.7	14.6
		-7.0	-7.6	40.5	13.3	40.4	13.6	40.3	14.0	40.3	14.2	40.2	14.4	40.1	14.8
		-5.0	-5.6	42.6	13.6	42.5	13.9	42.4	14.3	42.4	14.5	42.3	14.7	42.2	15.0
		-3.0	-3.7	44.7	13.9	44.6	14.2	44.5	14.6	44.5	14.7	44.4	14.9	43.6	14.8
		0.0	-0.7	48.3	14.4	48.2	14.7	48.1	15.0	48.0	15.1	46.8	14.7	43.6	13.5
		3.0	2.2	52.0	14.8	51.9	15.1	50.0	14.5	48.4	13.9	46.8	13.4	43.6	12.3
		5.0	4.1	54.7	15.0	53.2	14.7	50.0	13.6	48.4	13.1	46.8	12.6	43.6	11.6
		7.0	6.0	56.4	14.9	53.2	13.8	50.0	12.8	48.4	12.3	46.8	11.9	43.6	10.9
		9.0	7.9	56.4	14.0	53.2	13.0	50.0	12.1	48.4	11.6	46.8	11.2	43.6	10.3
		11.0	9.8	56.4	13.2	53.2	12.3	50.0	11.4	48.4	11.0	46.8	10.5	43.6	9.73
		13.0	11.8	56.4	12.4	53.2	11.5	50.0	10.7	48.4	10.3	46.8	9.94	43.6	9.18
		15.0	13.7	56.4	11.7	53.2	10.9	50.0	10.1	48.4	9.77	46.8	9.41	43.6	8.69

3TW60652-1(1)

NOTES - ANMERKUNGEN - Σημειώσεις - NOTAS - REMARQUES - NOTE - OPMERKINGEN - примечания - NOTLAR

1 is shown as reference. When selecting the unit models, avoid the Outdoor air temperature range shown by .

dient als Verweis. Vermeiden Sie bei der Auswahl der Gerätemodelle den als markierten Temperaturbereich der Außenluft

Η είναι ενδεικτική. κατά την επιλογή των μοντέλων των μονάδων, αποφύγετε το εύρος θερμοκρασίας εξωτερικού αέρα που υποδεικνύεται

se muestra como referencia. Cuando seleccione los modelos de unidad, evite el intervalo de temperaturas del aire exterior indicado mediante

est montré comme référence.Lors du choix des modèles d'unités, évitez la plage de températures de l'air extérieur illustré par

valori riportati unicamente come riferimento. Nel selezionare i modelli delle unità, non considerare i valori di temperatura dell'aria esterna indicati con il colore

is als referentie getoond. Wanneer modellen van eenheden worden gekozen, vermijd dan het bereik van buitenluchttemperaturen geïllustreerd door

показан как. При выборе модели устройства избегайте внешнюю температуру воздуха, указанную в

referans olarak gösterilmektedir. Ünite modellerini seçerken, belirtilen Dış hava sıcaklığı aralığından kaçının

2 The above table shows the average value of conditions which may occur.

Die obige Tabelle zeigt den Durchschnittswert der Bedingungen, die auftreten können.

Στον παραπάνω πίνακα αναγράφεται η μέση τιμή για συνθήκες που μπορεί να προκύψουν.

La tabla de arriba muestra el valor medio de condiciones que pueden ocurrir.

Le tableau ci-dessus donne la valeur moyenne pour des conditions qui peuvent survenir.

La tabella in alto mostra il valore delle condizioni medie che si possono riscontrare.

De tabel hierboven geeft de gemiddelde waarde aan van situaties die kunnen voorvallen.

Таблица расположенная выше показывает среднее значение условий, которые могут наступить.

Yukarıdaki tablo meydana gelebilecek koşulların ortalama değerini göstermektedir.

5 Capacity tables

5 - 2 Heating Capacity Tables

REYAQ16P

TC: Total Capacity: kW ; PI: Power Input: kW (compressor + outdoor fan motor)

Combination (%)	Capacity index (kW)	Outdoor air temp.		Indoor air temperature: °CDB											
				16.0		18.0		20.0		21.0		22.0		24.0	
				TC	PI	TC	PI	TC	PI	TC	PI	TC	PI	TC	PI
		°CDB	°CWB	kW	kW	kW	kW	kW	kW	kW	kW	kW	kW	kW	kW
90%	360 (40.50)	-19.8	-20.0	30.7	11.9	30.6	12.4	30.5	12.8	30.5	13.1	30.4	13.3	30.3	13.7
		-18.8	-19.0	31.2	12.1	31.2	12.5	31.1	13.0	31.0	13.2	31.0	13.4	30.9	13.8
		-16.7	-17.0	32.5	12.4	32.4	12.8	32.3	13.2	32.3	13.5	32.3	13.7	32.2	14.1
		-13.7	-15.0	33.9	12.7	33.8	13.1	33.7	13.5	33.7	13.7	33.7	13.9	33.6	14.3
		-11.8	-13.0	35.5	13.0	35.4	13.4	35.3	13.8	35.3	14.0	35.2	14.2	35.1	14.6
		-9.8	-11.0	37.1	13.4	37.1	13.7	37.0	14.1	36.9	14.3	36.9	14.5	36.8	14.8
		-9.5	-10.0	38.0	13.5	38.0	13.9	37.9	14.3	37.8	14.4	37.8	14.6	37.7	15.0
		-8.5	-9.1	38.9	13.7	38.8	14.0	38.7	14.4	38.7	14.6	38.6	14.7	38.6	15.1
		-7.0	-7.6	40.3	13.9	40.3	14.2	40.2	14.6	40.1	14.8	40.1	14.9	39.2	14.8
		-5.0	-5.6	42.4	14.2	42.3	14.5	42.3	14.9	42.2	15.0	42.1	15.1	39.2	13.9
		-3.0	-3.7	44.5	14.5	44.4	14.8	44.4	15.1	43.6	14.8	42.1	14.2	39.2	13.1
		0.0	-0.7	48.1	14.9	47.9	15.1	45.0	14.0	43.6	13.5	42.1	12.9	39.2	11.9
		3.0	2.2	50.8	14.8	47.9	13.8	45.0	12.8	43.6	12.3	42.1	11.8	39.2	10.9
		5.0	4.1	50.8	13.9	47.9	12.9	45.0	12.0	43.6	11.6	42.1	11.1	39.2	10.2
		7.0	6.0	50.8	13.1	47.9	12.2	45.0	11.3	43.6	10.9	42.1	10.5	39.2	9.67
		9.0	7.9	50.8	12.3	47.9	11.5	45.0	10.7	43.6	10.3	42.1	9.90	39.2	9.14
		11.0	9.8	50.8	11.6	47.9	10.8	45.0	10.1	43.6	9.72	42.1	9.36	39.2	8.65
		13.0	11.8	50.8	10.9	47.9	10.2	45.0	9.51	43.6	9.17	42.1	8.83	39.2	8.17
		15.0	13.7	50.8	10.3	47.9	9.66	45.0	9.01	43.6	8.69	42.1	8.37	39.2	7.75
80%	320 (36.00)	-19.8	-20.0	30.5	12.8	30.4	13.2	30.4	13.6	30.3	13.8	30.3	14.0	30.2	14.4
		-18.8	-19.0	31.1	12.9	31.0	13.3	30.9	13.7	30.9	13.9	30.9	14.1	30.8	14.5
		-16.7	-17.0	32.3	13.2	32.3	13.6	32.2	14.0	32.2	14.2	32.1	14.4	32.1	14.7
		-13.7	-15.0	33.8	13.5	33.7	13.9	33.6	14.2	33.6	14.4	33.5	14.6	33.5	15.0
		-11.8	-13.0	35.3	13.8	35.2	14.1	35.2	14.5	35.1	14.7	35.1	14.8	34.9	15.1
		-9.8	-11.0	37.0	14.1	36.9	14.4	36.9	14.7	36.8	14.9	36.8	15.1	34.9	14.2
		-9.5	-10.0	37.9	14.2	37.8	14.6	37.7	14.9	37.7	15.0	37.4	15.0	34.9	13.8
		-8.5	-9.1	38.7	14.4	38.7	14.7	38.6	15.0	38.6	15.1	37.4	14.6	34.9	13.4
		-7.0	-7.6	40.2	14.6	40.1	14.9	40.0	15.1	38.7	14.5	37.4	14.0	34.9	12.8
		-5.0	-5.6	42.3	14.8	42.2	15.1	40.0	14.2	38.7	13.7	37.4	13.1	34.9	12.0
		-3.0	-3.7	44.4	15.1	42.6	14.4	40.0	13.4	38.7	12.9	37.4	12.3	34.9	11.4
		0.0	-0.7	45.1	14.1	42.6	13.1	40.0	12.2	38.7	11.7	37.4	11.2	34.9	10.4
		3.0	2.2	45.1	12.8	42.6	11.9	40.0	11.1	38.7	10.7	37.4	10.3	34.9	9.49
		5.0	4.1	45.1	12.1	42.6	11.3	40.0	10.5	38.7	10.1	37.4	9.71	34.9	8.97
		7.0	6.0	45.1	11.4	42.6	10.6	40.0	9.89	38.7	9.53	37.4	9.18	34.9	8.48
		9.0	7.9	45.1	10.7	42.6	10.0	40.0	9.34	38.7	9.01	37.4	8.68	34.9	8.03
		11.0	9.8	45.1	10.1	42.6	9.47	40.0	8.84	38.7	8.53	37.4	8.22	34.9	7.62
		13.0	11.8	45.1	9.55	42.6	8.94	40.0	8.35	38.7	8.06	37.4	7.77	34.9	7.21
		15.0	13.7	45.1	9.04	42.6	8.47	40.0	7.92	38.7	7.65	37.4	7.38	34.9	6.85
70%	280 (320)	-19.8	-20.0	30.4	13.7	30.3	14.0	30.2	14.4	30.2	14.6	30.2	14.7	30.1	15.1
		-18.8	-19.0	30.9	13.8	30.9	14.1	30.8	14.5	30.8	14.7	30.7	14.8	30.5	15.0
		-16.7	-17.0	32.2	14.0	32.1	14.4	32.1	14.7	32.0	14.9	32.0	15.0	30.5	14.3
		-13.7	-15.0	33.6	14.3	33.5	14.6	33.5	14.9	33.4	15.1	32.8	14.8	30.5	13.5
		-11.8	-13.0	35.1	14.6	35.1	14.9	35.0	15.1	33.9	14.5	32.8	14.0	30.5	12.8
		-9.8	-11.0	36.8	14.8	36.8	15.1	35.0	14.3	33.9	13.7	32.8	13.2	30.5	12.1
		-9.5	-10.0	37.7	14.9	37.3	14.9	35.0	13.8	33.9	13.3	32.8	12.8	30.5	11.7
		-8.5	-9.1	38.6	15.0	37.3	14.5	35.0	13.5	33.9	12.9	32.8	12.4	30.5	11.4
		-7.0	-7.6	39.5	14.9	37.3	13.9	35.0	12.9	33.9	12.4	32.8	11.9	30.5	10.9
		-5.0	-5.6	39.5	14.0	37.3	13.0	35.0	12.1	33.9	11.6	32.8	11.2	30.5	10.3
		-3.0	-3.7	39.5	13.2	37.3	12.3	35.0	11.4	33.9	11.0	32.8	10.6	30.5	9.74
		0.0	-0.7	39.5	12.0	37.3	11.2	35.0	10.4	33.9	10.0	32.8	9.65	30.5	8.91
		3.0	2.2	39.5	10.9	37.3	10.2	35.0	9.53	33.9	9.19	32.8	8.85	30.5	8.19
		5.0	4.1	39.5	10.3	37.3	9.66	35.0	9.01	33.9	8.69	32.8	8.37	30.5	7.75
		7.0	6.0	39.5	9.75	37.3	9.13	35.0	8.52	33.9	8.22	32.8	7.93	30.5	7.35
		9.0	7.9	39.5	9.21	37.3	8.63	35.0	8.07	33.9	7.79	32.8	7.51	30.5	6.97
		11.0	9.8	39.5	8.72	37.3	8.18	35.0	7.65	33.9	7.39	32.8	7.13	30.5	6.62
		13.0	11.8	39.5	8.24	37.3	7.73	35.0	7.24	33.9	7.00	32.8	6.75	30.5	6.28
		15.0	13.7	39.5	7.81	37.3	7.34	35.0	6.88	33.9	6.65	32.8	6.42	30.5	5.98
60%	240 (27.00)	-19.8	-20.0	30.2	14.6	30.1	14.9	30.0	15.1	29.0	14.5	28.1	13.9	26.1	12.8
		-18.8	-19.0	30.8	14.7	30.7	15.0	30.0	14.7	29.0	14.1	28.1	13.6	26.1	12.5
		-16.7	-17.0	32.0	14.9	31.9	15.1	30.0	14.0	29.0	13.5	28.1	12.9	26.1	11.9
		-13.7	-15.0	33.4	15.1	31.9	14.3	30.0	13.3	29.0	12.8	28.1	12.3	26.1	11.3
		-11.8	-13.0	33.9	14.5	31.9	13.5	30.0	12.6	29.0	12.1	28.1	11.6	26.1	10.7
		-9.8	-11.0	33.9	13.7	31.9	12.8	30.0	11.9	29.0	11.4	28.1	11.0	26.1	10.1
		-9.5	-10.0	33.9	13.3	31.9	12.4	30.0	11.5	29.0	11.1	28.1	10.7	26.1	9.83
		-8.5	-9.1	33.9	12.9	31.9	12.1	30.0	11.2	29.0	10.8	28.1	10.4	26.1	9.58
		-7.0	-7.6	33.9	12.4	31.9	11.5	30.0	10.7	29.0	10.3	28.1	9.94	26.1	9.18
		-5.0	-5.6	33.9	11.6	31.9	10.9	30.0	10.1	29.0	9.74	28.1	9.38	26.1	8.67
		-3.0	-3.7	33.9	11.0	31.9	10.3	30.0	9.56	29.0	9.21	28.1	8.87	26.1	8.21
		0.0	-0.7	33.9	10.0	31.9	9.37	30.0	8.75	29.0	8.44	28.1	8.14	26.1	7.54
		3.0	2.2	33.9	9.18	31.9	8.61	30.0	8.04	29.0	7.76	28.1	7.49	26.1	6.95
		5.0	4.1	33.9	8.68	31.9	8.14	30.0	7.62	29.0	7.36	28.1	7.10	26.1	6.60
		7.0	6.0	33.9	8.22	31.9	7.71	30.0	7.22	29.0	6.98	28.1	6.74	26.1	6.27
		9.0	7.9	33.9	7.78	31.9	7.31	30.0	6.85	29.0	6.63	28.1	6.40	26.1	5.96
		11.0	9.8	33.9	7.38	31.9	6.94	30.0	6.51	29.0	6.30	28.1	6.09	26.1	5.67
		13.0	11.8	33.9	6.99	31.9	6.58	30.0	6.18	29.0	5.98	28.1	5.78	26.1	5.39
		15.0	13.7	33.9	6.65	31.9	6.26	30.0	5.88	29.0	5.70	28.1	5.51	26.1	5.15
50%	200 (22.50)	-19.8	-20.0	28.2	14.0	26.6	13.0	25.0	12.1	24.2	11.6	23.4	11.2	21.8	10.3
		-18.8	-19.0	28.2	13.7	26.6	12.7	25.0	11.8	24.2	11.4	23.4	10.9	21.8	10.1
		-16.7	-17.0	28.2	13.0	26.6	12.1	25.0	11.3	24.2	10.8	23.4	10.4	21.8	9.61
		-13.7	-15.0	28.2	12.3	26.6	11.5	25.0	10.7	24.2	10.3	23.4	9.91	21.8	9.15
		-11.8	-13.0	28.2	11.7	26.6	10.9	25.0	10.1	24.2	9.78	23.4	9.41	21.8	8.70
		-9.8	-11.0	28.2	11.0	26.6	10.3	25.0	9.60	24.2	9.26	23.4	8.92	21.8	8.25
		-9.5	-10.0	28.2	10.7	26.6	10.0	25.0	9.34	24.2	9.01	23.4	8.68	21.8	8.03
		-8.5	-9.1	28.2	10.4	26.6	9.77	25.0	9.11	24.2	8.79	23.4	8.47	21.8	7.84
		-7.0	-7.6	28.2	10.00	26.6	9.36	25.0	8.73	24.2	8.43	23.4	8.12	21.8	7.53
		-5.0	-5.6	28.2	9.43	26.6	8.84	25.0	8.25	24.2	7.97	23.4	7.68	21.8	7.13
		-3.0	-3.7	28.2	8.92	26.6	8.37	25.0	7.82	24.2	7.55	23.4	7.29	21.8	6.77
		0.0	-0.7	28.2	8.18	26.6	7.68	25.0	7.19	24.2	6.95	23.4	6.71	21.8	6.24
		3.0	2.2	28.2	7.53	26.6	7.08	25.0	6.64	24.2	6.42	23.4	6.20	21.8	5.78
		5.0	4.1	28.2	7.14	26.6	6.72	25.0	6.30	24.2	6.10	23.4	5.90	21.8	5.50
		7.0	6.0	28.2	6.77	26.6	6.38	25.0	5.99	24.2	5.80	23.4	5.61	21.8	5.24
		9.0	7.9	28.2	6.43	26.6	6.07	25.0	5.70	24.2	5.52	23.4	5.34	21.8	4.99
		11.0	9.8	28.2	6.12	26.6	5.77	25.0	5.43	24.2	5.26	23.4	5.10	21.8	4.77
		13.0	11.8	28.2	5.81	26.6	5.49	25.0	5.17	24.2	5.01	23.4	4.85	21.8	4.54
		15.0	13.7	28.2	5.54	26.6	5.23	25.0	4.93	24.2	4.78	23.4	4.64	21.8	4.35

3TW60652-1(2)

5 Capacity tables

5 - 3 Capacity Correction Factor

REYAQ10P

1. Rate of change in heating capacity

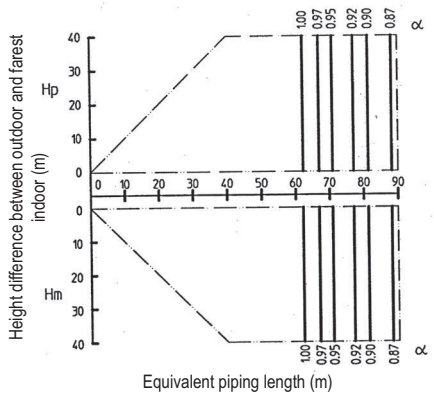

2. Rate of change in cooling capacity

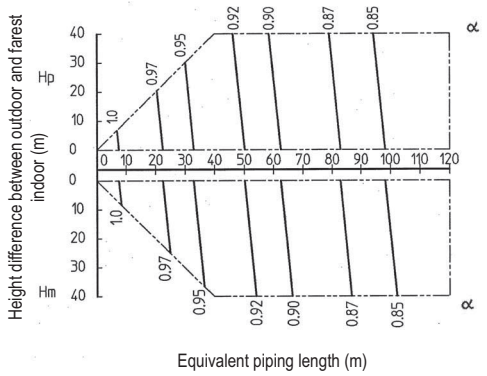

[Explanation of symbols]
Hp: Level difference (m) between indoor and outdoor unit (outdoor unit is on highest location)
Hm: Level difference (m) between indoor and outdoor unit (outdoor unit is on lowest location)

3TW60652-2A

NOTES

[Capacity correction]

1. These figures illustrate the rate of change in capacity (α) of a standard indoor unit system at maximum load under standard conditions.
   Moreover, under partial load conditions there is only a minor deviation from the rate of change in capacity shown in the figures above.

2. With this outdoor unit, constant evaporating pressure control during cooling and constant condensing pressure control during heating is carried out.

3. Method of calculating capacity (connection ratio ≤ 100%)
   [Capacity] = [Capacity under 100% connection ratio (capacity table)] X (correction factor for capacity (α) due to piping length to farest indoor unit]
   Method of calculating capacity (connection ratio > 100%)
   [Capacity] = [Capacity under xxx% connection ratio (capacity table)] X (correction factor for capacity (α) due to piping length to farest indoor unit]

[Equivalent piping length correction]

4. When overall equivalent piping length is 90m or more, the diameter of the main liquid pipes must be increased.

5. [Overall equivalent piping length] = [equivalent piping length to main pipe] X [correction factor (β)] + [equivalent length after branching]

Model	Liquid standard	Liquid increased	Correction factor (β) (heating)	Correction factor (β) (cooling)
REYAQ10P	9.5 Ø	12.7 Ø	0.2	0.5

[EXAMPLE]

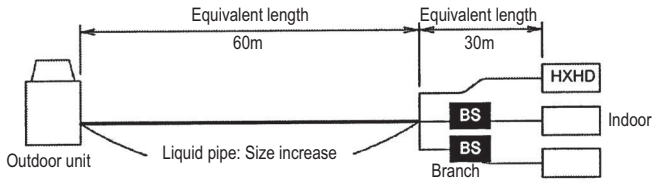

A. Overall equivalent piping length = 60m X 0.2 + 30 = 42m (heating; β=0.2)

B. Overall equivalent piping length = 60m X 0.5 + 30 = 60m (cooling; β=0.5)

C. The correction factor for capacity when H=0m: α = 1 (heating)

D. The correction factor for capacity when H=0m: α = 0.91 (cooling)

5 Capacity tables

5 - 3 Capacity Correction Factor

REYAQ12P

1. Rate of change in heating capacity

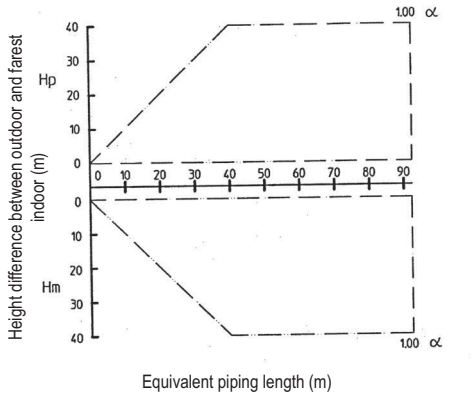

2. Rate of change in cooling capacity

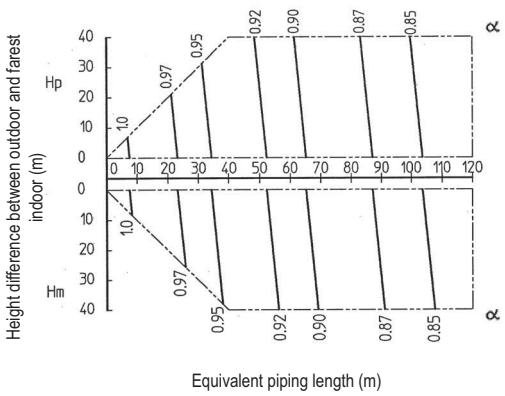

[Explanation of symbols]
Hp: Level difference (m) between indoor and outdoor unit (outdoor unit is on highest location)
Hm: Level difference (m) between indoor and outdoor unit (outdoor unit is on lowest location)

3TW60652-2A

NOTES

[Capacity correction]

1. These figures illustrate the rate of change in capacity (α) of a standard indoor unit system at maximum load under standard conditions. Moreover, under partial load conditions there is only a minor deviation from the rate of change in capacity shown in the figures above.

2. With this outdoor unit, constant evaporating pressure control during cooling and constant condensing pressure control during heating is carried out.

3. Method of calculating capacity (connection ratio ≤ 100%)
[Capacity] = [Capacity under 100% connection ratio (capacity table)] X (correction factor for capacity (α) due to piping length to farest indoor unit]
Method of calculating capacity (connection ratio > 100%)
[Capacity] = [Capacity under xxx% connection ratio (capacity table)] X (correction factor for capacity (α) due to piping length to farest indoor unit]

[Equivalent piping length correction]

4. When overall equivalent piping length is 90m or more, the diameter of the main liquid pipes must be increased.

5. [Overall equivalent piping length] = [equivalent piping length to main pipe] X [correction factor (β)] + [equivalent length after branching]

Model	Liquid standard	Liquid increased	Correction factor (β) (heating)	Correction factor (β) (cooling)
REYAQ12P	12.7 Ø	15.9 Ø	0.3	0.5

[EXAMPLE]

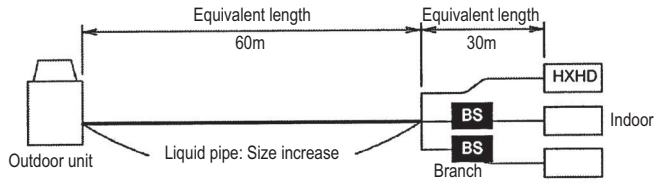

A. Overall equivalent piping length = 60m X 0.3 + 30 = 48m (heating; β=0.3)

B. Overall equivalent piping length = 60m X 0.5 + 30 = 60m (cooling; β=0.5)

C. The correction factor for capacity when H=0m: α = 1 (heating)

D. The correction factor for capacity when H=0m: α = 0.91 (cooling)

5 Capacity tables

5 - 3 Capacity Correction Factor

REYAQ14P

1. Rate of change in heating capacity

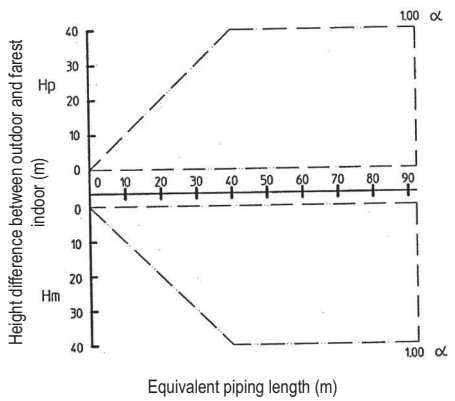

2. Rate of change in cooling capacity

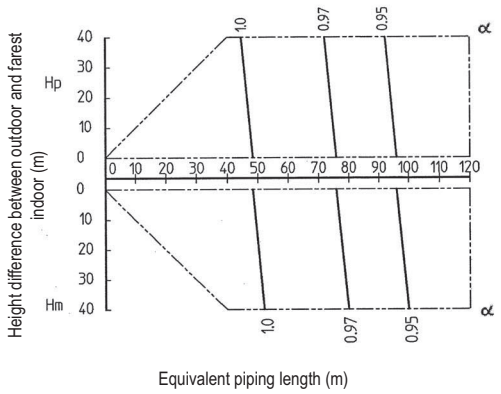

[Explanation of symbols]
Hp: Level difference (m) between indoor and outdoor unit (outdoor unit is on highest location)
Hm: Level difference (m) between indoor and outdoor unit (outdoor unit is on lowest location)

3TW60652-2A

NOTES

[Capacity correction]

1. These figures illustrate the rate of change in capacity (α) of a standard indoor unit system at maximum load under standard conditions. Moreover, under partial load conditions there is only a minor deviation from the rate of change in capacity shown in the figures above.

2. With this outdoor unit, constant evaporating pressure control during cooling and constant condensing pressure control during heating is carried out.

3. Method of calculating capacity (connection ratio ≤ 100%)
[Capacity] = [Capacity under 100% connection ratio (capacity table)] X (correction factor for capacity (α) due to piping length to farest indoor unit]
Method of calculating capacity (connection ratio > 100%)
[Capacity] = [Capacity under xxx% connection ratio (capacity table)] X (correction factor for capacity (α) due to piping length to farest indoor unit]

[Equivalent piping length correction]

4. When overall equivalent piping length is 90m or more, the diameter of the main liquid pipes must be increased.

5. [Overall equivalent piping length] = [equivalent piping length to main pipe] X [correction factor (β)] + [equivalent length after branching]

Model	Liquid standard	Liquid increased	Correction factor (β) (heating)	Correction factor (β) (cooling)
REYAQ14P	12.7 Ø	15.9 Ø	0.3	0.5

[EXAMPLE]

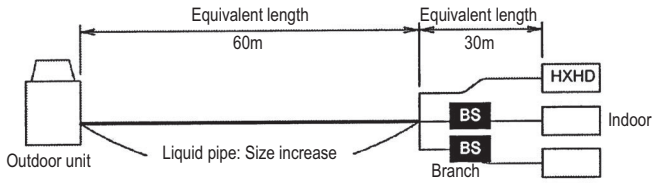

A. Overall equivalent piping length = 60m X 0.3 + 30 = 48m (heating; β=0.3)

B. Overall equivalent piping length = 60m X 0.5 + 30 = 60m (cooling; β=0.5)

C. The correction factor for capacity when H=0m: α = 1 (heating)

D. The correction factor for capacity when H=0m: α = 0.99 (cooling)

5 Capacity tables

5 - 3 Capacity Correction Factor

REYAQ16P

1. Rate of change in heating capacity

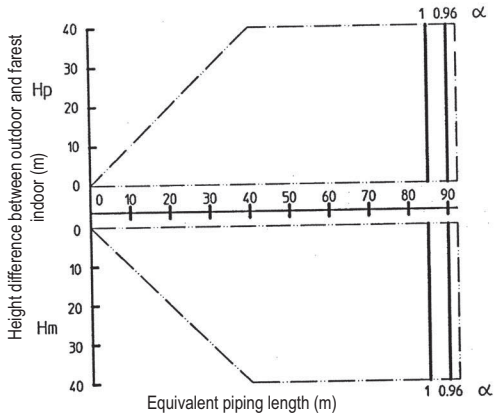

2. Rate of change in cooling capacity

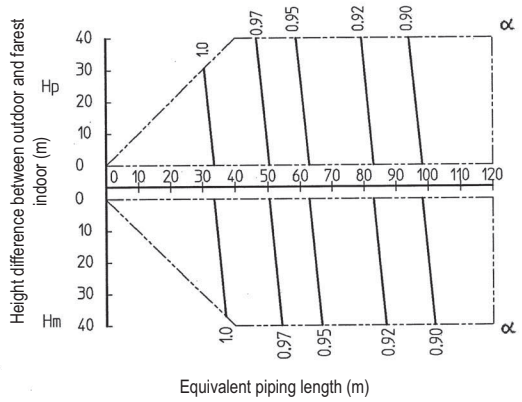

[Explanation of symbols]
Hp: Level difference (m) between indoor and outdoor unit (outdoor unit is on highest location)
Hm: Level difference (m) between indoor and outdoor unit (outdoor unit is on lowest location)

3TW60652-2A

NOTES

[Capacity correction]

1. These figures illustrate the rate of change in capacity (α) of a standard indoor unit system at maximum load under standard conditions. Moreover, under partial load conditions there is only a minor deviation from the rate of change in capacity shown in the figures above.

2. With this outdoor unit, constant evaporating pressure control during cooling and constant condensing pressure control during heating is carried out.

3. Method of calculating capacity (connection ratio ≤ 100%)
[Capacity] = [Capacity under 100% connection ratio (capacity table)] X (correction factor for capacity (α) due to piping length to farest indoor unit]
Method of calculating capacity (connection ratio > 100%)
[Capacity] = [Capacity under xxx% connection ratio (capacity table)] X (correction factor for capacity (α) due to piping length to farest indoor unit]

[Equivalent piping length correction]

4. When overall equivalent piping length is 90m or more, the diameter of the main liquid pipes must be increased.

5. [Overall equivalent piping length] = [equivalent piping length to main pipe] X [correction factor (β)] + [equivalent length after branching]

Model	Liquid standard	Liquid increased	Correction factor (β) (heating)	Correction factor (β) (cooling)
REYAQ16P	12.7 Ø	15.9 Ø	0.3	0.5

[EXAMPLE]

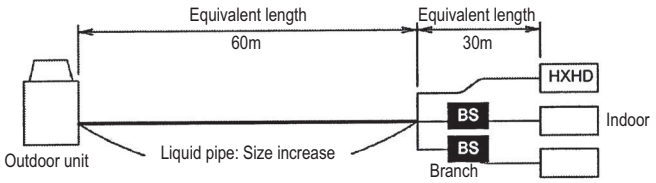

A. Overall equivalent piping length = 60m X 0.3 + 30 = 48m (heating; β=0.3)

B. Overall equivalent piping length = 60m X 0.5 + 30 = 60m (cooling; β=0.5)

C. The correction factor for capacity when H=0m: α = 1 (heating)

D. The correction factor for capacity when H=0m: α = 0.955 (cooling)

6 Dimensional drawings

6 - 1 Dimensional Drawings

REYAQ-P

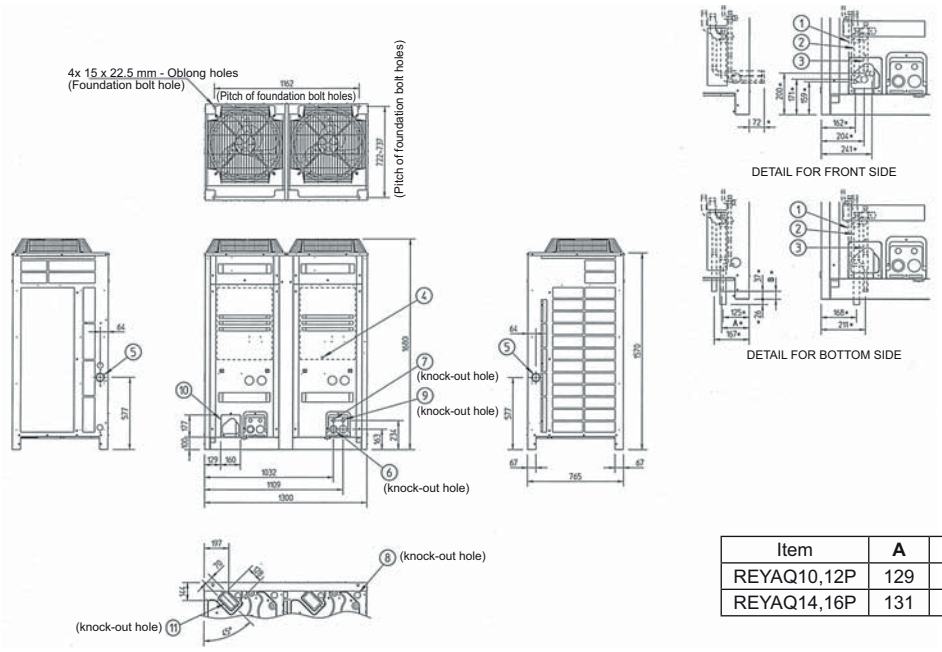

Item	A	B
REYAQ10,12P	129	32
REYAQ14,16P	131	38

3TW59924-1

No.	Parts name	Remarks
1	Liquid pipe connection port	See note 2
2	Suction gas pipe connection port	See note 2
3	Discharge gas pipe connection port	See note 2
4	Grounding terminal	Inside of switch box (M8)
5	Power cord routing hole (side)	ø62 mm
6	Power cord routing hole (front)	ø45 mm
7	Power cord routing hole (front)	ø27 mm
8	Power cord routing hole (bottom)	ø50 mm
9	Wire routing hole (front)	ø27 mm
10	Pipe routing hole (front)	See note 1
11	Pipe routing hole (bottom)	See note 1

NOTES

1 For piping connection method (front and bottom sides), see installation manual.

2 Piping connections for f eld connection:

Discharge gas pipe
ø19.1 mm Brazing connection: REYAQ10,12P
ø22.2 mm Brazing connection: REYAQ14,16P

Suction gas pipe
ø22.2 mm Brazing connection: REYAQ10,12P
ø28.6 mm Brazing connection: REYAQ14,16P

Liquid pipe
ø9.5 mm Brazing connection: REYAQ10P
ø12.7 mm Brazing connection: REYAQ12,14,16P

3 * Shows the dimensions after f xing the accessory bag.

7 Centre of gravity

7 - 1 Centre of Gravity

REYAQ-P

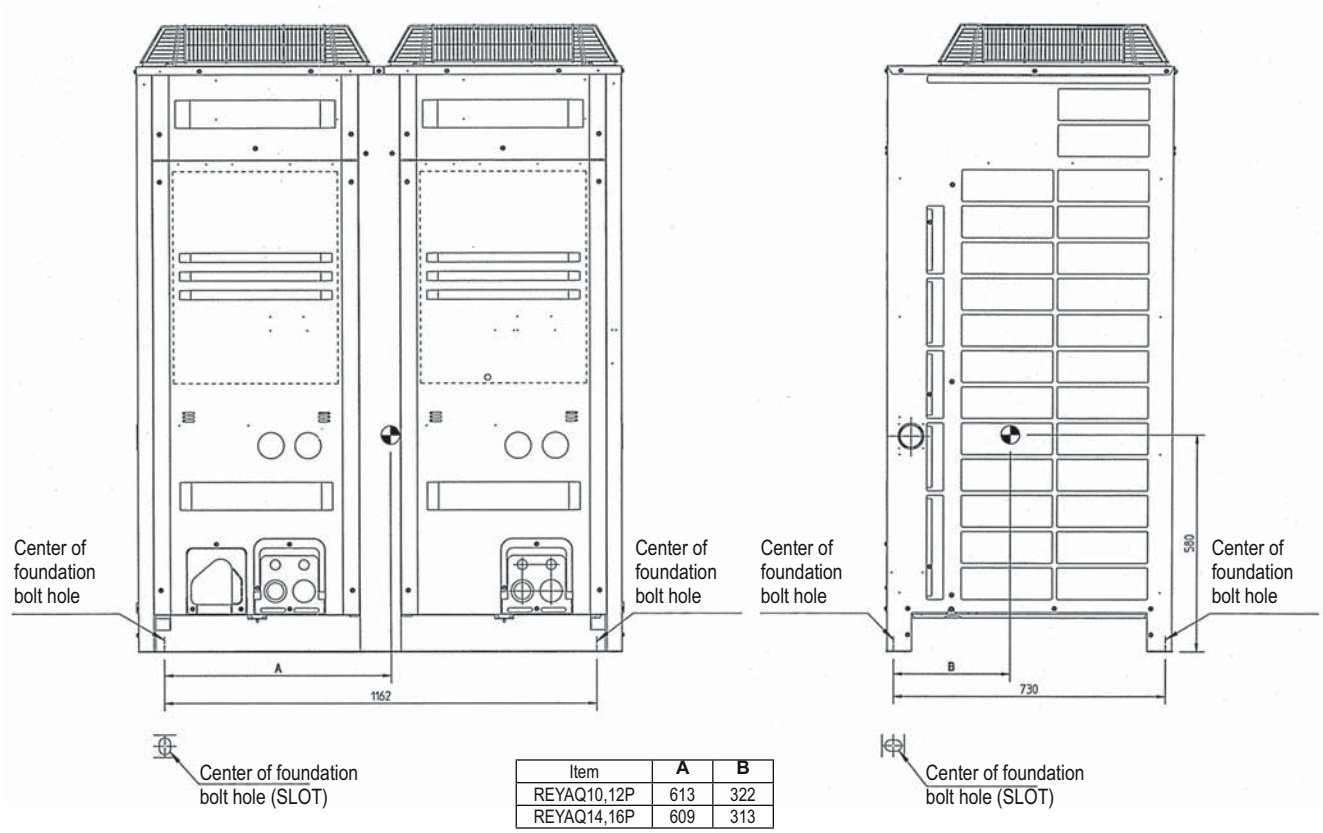

Item	A	B
REYAQ10,12P	613	322
REYAQ14,16P	609	313

3TW59924-1

8 Piping diagrams

8 - 1 Piping Diagrams

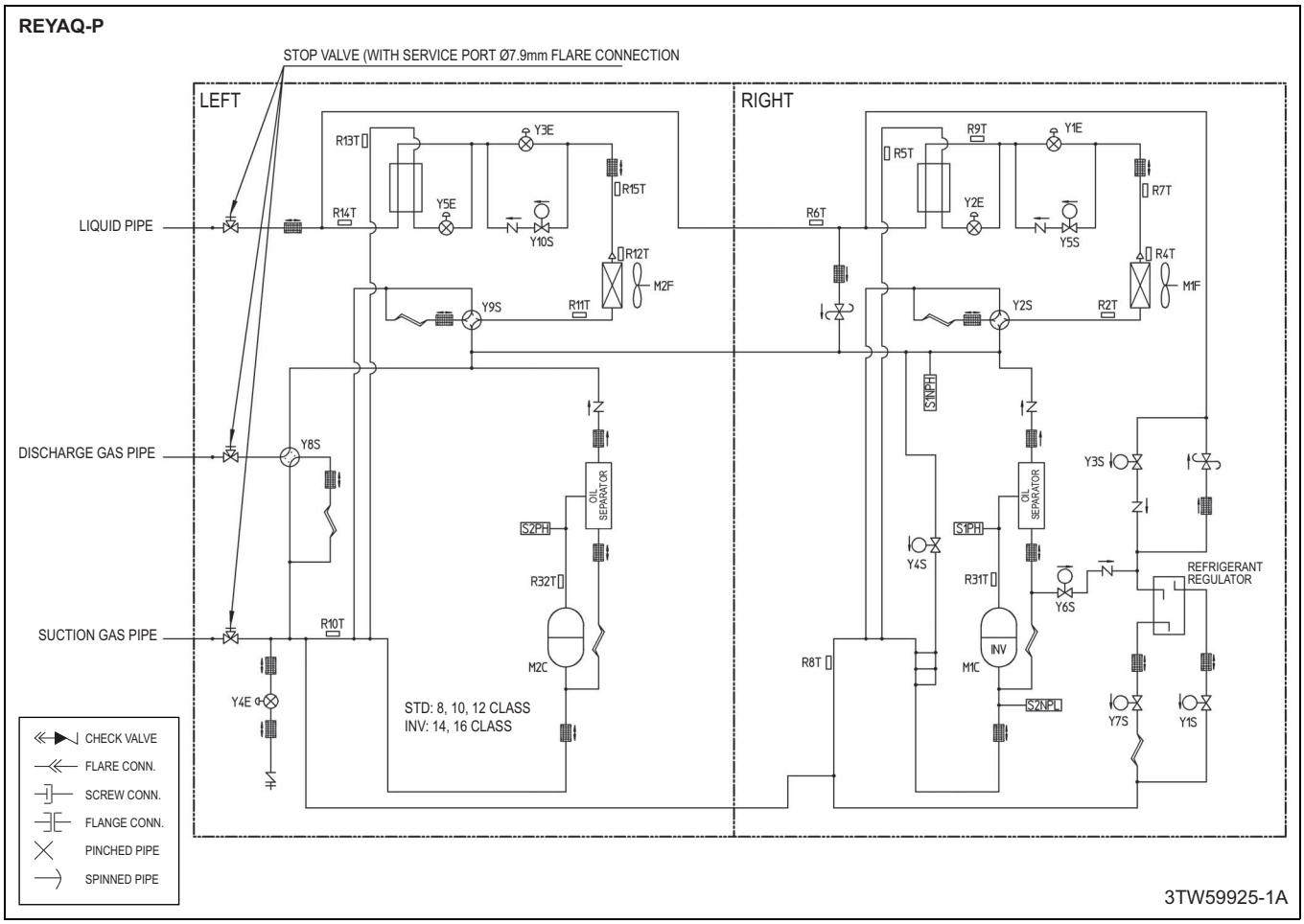

9 Wiring diagrams

9 - 1 Wiring Diagrams - Three Phase

REYAQ10-12P

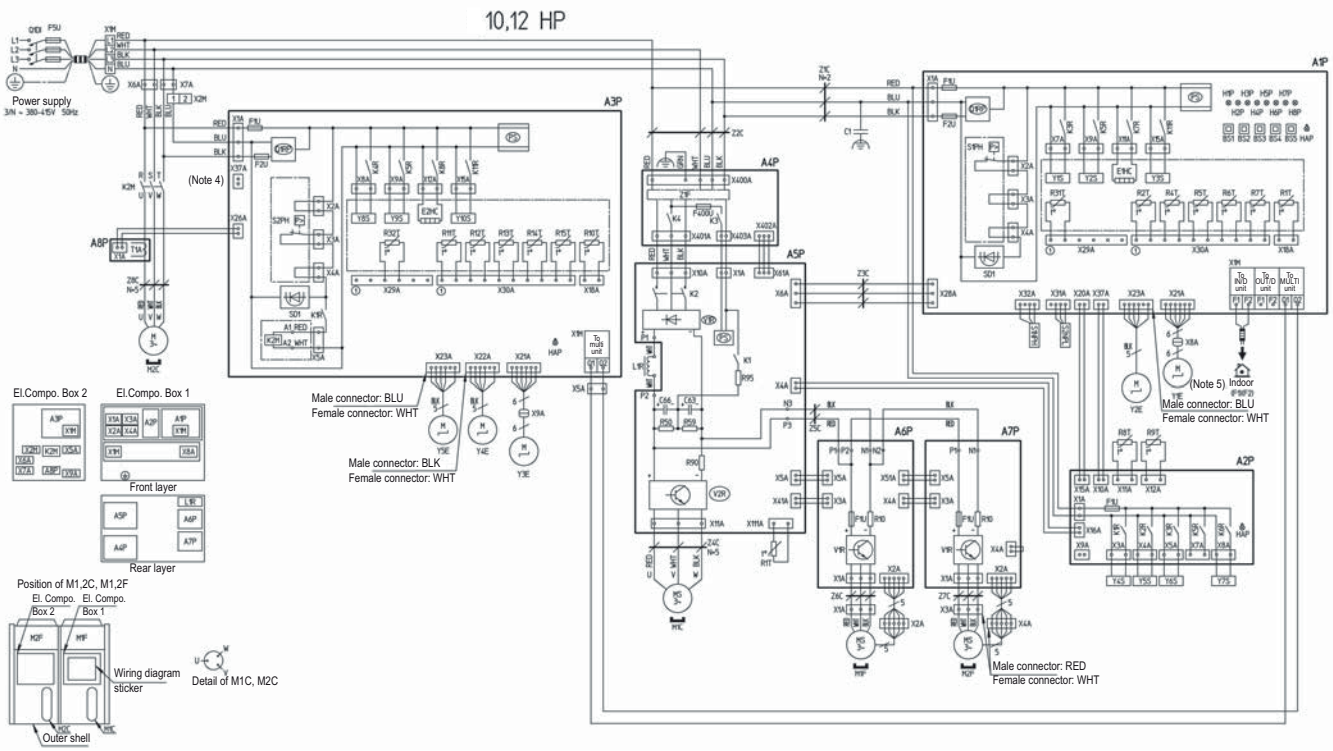

A1P~A8P	**PRINTED CIRCUIT BOARD**		L1R	REACTOR		X2M	TERMINAL STRIP (RELAY)
	A1P: MAIN	A5P: INVERTER	M1C, M2C	MOTOR (COMPRESSOR)		Y1E	ELECTRONIC EXPANSION VALVE (MAIN 1)
	A2P: SUB 1	A6P, A7P: FAN	M1F, M2F	MOTOR (FAN)		Y2E	ELECTRONIC EXPANSION VALVE (SUBCOOL 1)
	A3P: SUB 2	A8P: CURRENT SENSOR	PS	SWITCHING POWER SUPPLY (A1P, A3P, A5P)		Y3E	ELECTRONIC EXPANSION VALVE (MAIN 2)
	A4P: NOISE FILTER		Q1DI	EARTH LEAKAGE BREAKER		Y4E	ELECTRONIC EXPANSION VALVE (CHARGE)
BS1~BS5	PUSH BUTTON SWITCH (MODE, SET, RETURN, TEST, RESET)		Q1RP	REVERSE PHASE DETECTION CIRCUIT (A1P, A3P)		Y5E	ELECTRONIC EXPANSION VALVE (SUBCOOL 2)
			R10	RESISTOR (CURRENT SENSOR) (A6P, A7P)		Y1S~Y10S	**SOLENOID VALVE**
C1, C63, C66	CAPACITOR		R50, R59	RESISTOR			Y1S: RMTG / Y6S: RMTT
E1HC, E2HC	CRANKCASE HEATER (A1P, A3P)		R90	RESISTOR (CURRENT SENSOR)			Y2S: 4 WAY VALVE (H/E 1) / Y7S: RMTO
F1U, F2U	FUSE (T, 3.15A, 250V) (A1P, A3P)		R95	RESISTOR (CURRENT LIMITING)			Y3S: RMTL / Y8S: 4 WAY VALVE (PIPE)
F1U	FUSE (T, 3.15A, 250V) (A2P)		R1T~R15T R31T, R32T	**THERMISTOR**			Y4S: HOT GAS / Y9S: 4 WAY VALVE (H/E 2)
F1U	FUSE (8A, DC650V) (A6P, A7P)			R1T: AIR (A1P)	R8T: SUCTION 1		Y5S: EV BYPASS 1 / Y10S: EV BYPASS 2
F5U	FIELD FUSE			R1T: FIN (A5P)	R9T: LIQUID 1	Z1C~Z8C	NOISE FILTER (FERRITE CORE)
F400U	FUSE (T, 6.3A, 250V)			R2T: H/E GAS 1	R10T: SUCTION 2	Z1F	NOISE FILTER (WITH SURGE ABSORBER)
H1P~H8P	PILOTLAMP (SERVICE MONITOR- ORANGE) [H2P] PREPARE, TEST ---------- FLICKERING MALFUNCTION DETECTION — — LIGHT UP			R31T: M1C DISCHARGE	R11T: H/E GAS 2		
				R32T: M2C DISCHARGE	R12T: H/E DEICER 2	**CONNECTOR FOR OPTIONAL PARTS**	
				R4T: H/E DEICER 1	R13T: SUB COOL H/E GAS 2	X7A	OPERATION OUTPUT (A2P)
HAP	PILOT LAMP (SERVICE MONITOR-GREEN) (A1P, A2P, A3P)			R5T: SUB COOL H/E GAS 1	R14T: LIQUID 2	X9A	POWER SUPPLY (ADAPTER) (A2P)
K1~K4	K1: MAGNETIC RELAY			R6T: SUB COOL H/E LIQ	R15T: H/E LIQUID 2	X37A	POWER SUPPLY (ADAPTER) (A3P)
	K3: MAGNETIC RELAY			R7T: H/E LIQUID 1			
	K2: MAGNETIC CONTACTOR (M1C)		S1NPH	PRESSURE SENSOR (HIGH)			
	K2: MAGNETIC CONTACTOR (M1C)		S2NPL	PRESSURE SENSOR (LOW)			
K1R~K8R, K11R	**MAGNETIC RELAY**		S1PH, S2PH	PRESSURE SWITCH (HIGH)			
	K1R: Y4S (A2P)	K5R: FOR OPTION (A2P)	T1A	CURRENT SENSOR			
	K1R: K2M (A3P)	K5R: Y9S (A3P)	SD1	SAFETY DEVICES INPUT (A1P, A3P)			
	K2R: Y5S	K6R: Y7S	V1R	DIODE BRIDGE (A5P)	POWER MODULE (A6P, A7P)		
	K3R: Y1S (A1P)	K7R: E1HC (A1P)	V2R	POWER MODULE			
	K3R: Y6S (A2P)	K8R: E2HC (A3P)	X1A~X9A	CONNECTOR			
	K4R: Y8S	K11R: Y3S (A1P)	X1M	TERMINAL STRIP (POWER SUPPLY)			
	K5R: Y2S (A1P)	K1R: Y10S (A3P)	X1M	TERMINAL STRIP (CONTROL) (A1P, A3P)			

NOTES

1. This wiring diagram only applies to the outdoor unit.
2. :Field wiring
3. :Terminal strip : Connector
   :Terminal : Protective earth (screw)
4. When using the option adapter, refer to the installation manual.
5. Refer to the installation manual, for connection wiring to indoor-outdoor transmission F1- F2 and on how to use BS1-BS5.
6. Do not operate the unit by short-circuiting protection device S1PH, S2PH.
7. BLK = BLACK RED = RED YLW = YELLOW WHT = WHITE PNK = PINK
   BRN = BROWN GRY = GREY GRN = GREEN ORG = ORANGE BLU = BLUE

1TW59926-2

9 Wiring diagrams

9 - 1 Wiring Diagrams - Three Phase

REYAQ14-16P

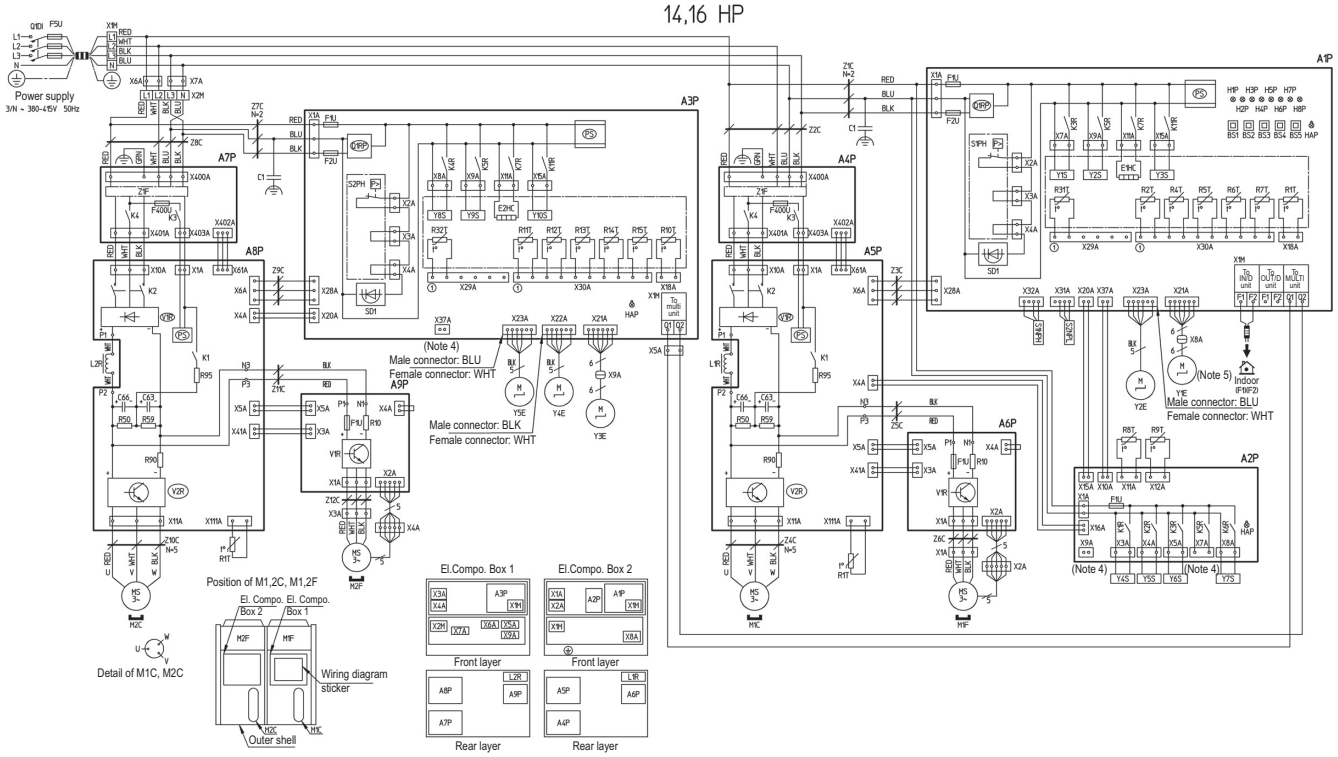

A1P~A8P	**PRINTED CIRCUIT BOARD**		L1R, L2R	REACTOR		X2M	TERMINAL STRIP (RELAY)
	A1P: MAIN	A4P, A7P: NOISE FILTER	M1C, M2C	MOTOR (COMPRESSOR)		Y1E	ELECTRONIC EXPANSION VALVE (MAIN 1)
	A2P: SUB 1	A5P, A8P: INVERTER	M1F, M2F	MOTOR (FAN)		Y2E	ELECTRONIC EXPANSION VALVE (SUBCOOL 1)
	A3P: SUB 2	A6P, A9P: FAN	PS	SWITCHING POWER SUPPLY (A1P, A3P, A5P, A8P)		Y3E	ELECTRONIC EXPANSION VALVE (MAIN 2)
			Q1DI	EARTH LEAKAGE BREAKER		Y4E	ELECTRONIC EXPANSION VALVE (CHARGE)
BS1~BS5	PUSH BUTTON SWITCH (MODE, SET, RETURN, TEST, RESET)		Q1RP	REVERSE PHASE DETECTION CIRCUIT (A1P, A3P)		Y5E	ELECTRONIC EXPANSION VALVE (SUBCOOL 2)
			R10	RESISTOR (CURRENT SENSOR) (A6P, A9P)		Y1S~Y10S	**SOLENOID VALVE**
C1, C63, C66	CAPACITOR		R50, R59	RESISTOR (A5P, A8P)			Y1S: RMTG / Y6S: RMTT
E1HC, E2HC	CRANKCASE HEATER (A1P, A3P)		R90	RESISTOR (CURRENT SENSOR) (A5P, A8P)			Y2S: 4 WAY VALVE (H/E 1) / Y7S: RMTO
F1U, F2U	FUSE (T, 3.15A, 250V) (A1P, A3P)		R95	RESISTOR (CURRENT LIMITING) (A5P, A8P)			Y3S: RMTL / Y8S: 4 WAY VALVE (PIPE)
F1U	FUSE (T, 3.15A, 250V) (A2P)		R1T~R15T R31T, R32T	**THERMISTOR**			Y4S: HOT GAS / Y9S: 4 WAY VALVE (H/E 2)
F1U	FUSE (8A, DC650V) (A6P, A9P)			R1T: AIR (A1P)	R8T: SUCTION 1		Y5S: EV BYPASS 1 / Y10S: EV BYPASS 2
F5U	FIELD FUSE			R1T: FIN (A5P, A8P))	R9T: LIQUID 1	Z1C~Z12C	NOISE FILTER (FERRITE CORE)
F400U	FUSE (T, 6.3A, 250V) (A4P) (A7P)			R2T: H/E GAS 1	R10T: SUCTION 2	Z1F	NOISE FILTER (WITH SURGE ABSORBER) (A4P,A7P)
H1P~H8P	PILOTLAMP (SERVICE MONITOR- ORANGE) [H2P] PREPARE, TEST ---------- FLICKERING MALFUNCTION DETECTION — — LIGHT UP			R31T: M1C DISCHARGE	R11T: H/E GAS 2		
				R32T: M2C DISCHARGE	R12T: H/E DEICER 2	**CONNECTOR FOR OPTIONAL PARTS**	
				R4T: H/E DEICER 1	R13T: SUB COOL H/E GAS 2	X7A	OPERATION OUTPUT (A2P)
HAP	PILOT LAMP (SERVICE MONITOR-GREEN) (A1P, A2P, A3P)			R5T: SUB COOL H/E GAS 1	R14T: LIQUID 2	X9A	POWER SUPPLY (ADAPTER) (A2P)
K1~K4	K1: MAGNETIC RELAY (A5P, A8P)			R6T: SUB COOL H/E LIQ	R15T: H/E LIQUID 2	X37A	POWER SUPPLY (ADAPTER) (A3P)
	K3: MAGNETIC RELAY (A4P, A7P)			R7T: H/E LIQUID 1			
	K2: MAGNETIC CONTACTOR (M1C-A5P, M2C-A8P)		S1NPH	PRESSURE SENSOR (HIGH)			
	K2: MAGNETIC CONTACTOR (M1C-A4P, M2C-A7P)		S2NPL	PRESSURE SENSOR (LOW)			
K1R~K7R, K11R	**MAGNETIC RELAY**		S1PH, S2PH	PRESSURE SWITCH (HIGH)			
	K1R: Y4S	K5R: FOR OPTION (A2P)	SD1	SAFETY DEVICES INPUT (A1P, A3P)			
	K2R: Y5S	K5R: Y9S (A3P)	V1R	DIODE BRIDGE (A5P, A8P)	POWER MODULE (A6P, A9P)		
	K3R: Y1S (A1P)	K6R: Y7S (A2P)	V2R	POWER MODULE (A5P, A8P)			
	K3R: Y6S (A2P)	K7R: E1HC (A1P)	X1A~X9A	CONNECTOR			
	K4R: Y8S	K7R: (E2HC) (A3P)	X1M	TERMINAL STRIP (POWER SUPPLY)			
	K5R: Y2S (A1P)	K11R: Y10S (A3P)	X1M	TERMINAL STRIP (CONTROL) (A1P, A3P)			

NOTES

1. This wiring diagram only applies to the outdoor unit.
2. :Field wiring
3. :Terminal strip : Connector
   :Terminal : Protective earth (screw)
4. When using the option adapter, refer to the installation manual.
5. Refer to the installation manual, for connection wiring to indoor-outdoor transmission F1- F2 and on how to use BS1-BS5.
6. Do not operate the unit by short-circuiting protection device S1PH, S2PH.
7. BLK = BLACK RED = RED YLW = YELLOW WHT = WHITE PNK = PINK
   BRN = BROWN GRY = GREY GRN = GREEN ORG = ORANGE BLU = BLUE

1TW59926-3

10 External connection diagrams

10 - 1 External Connection Diagrams

HXHD-A
REYAQ-P

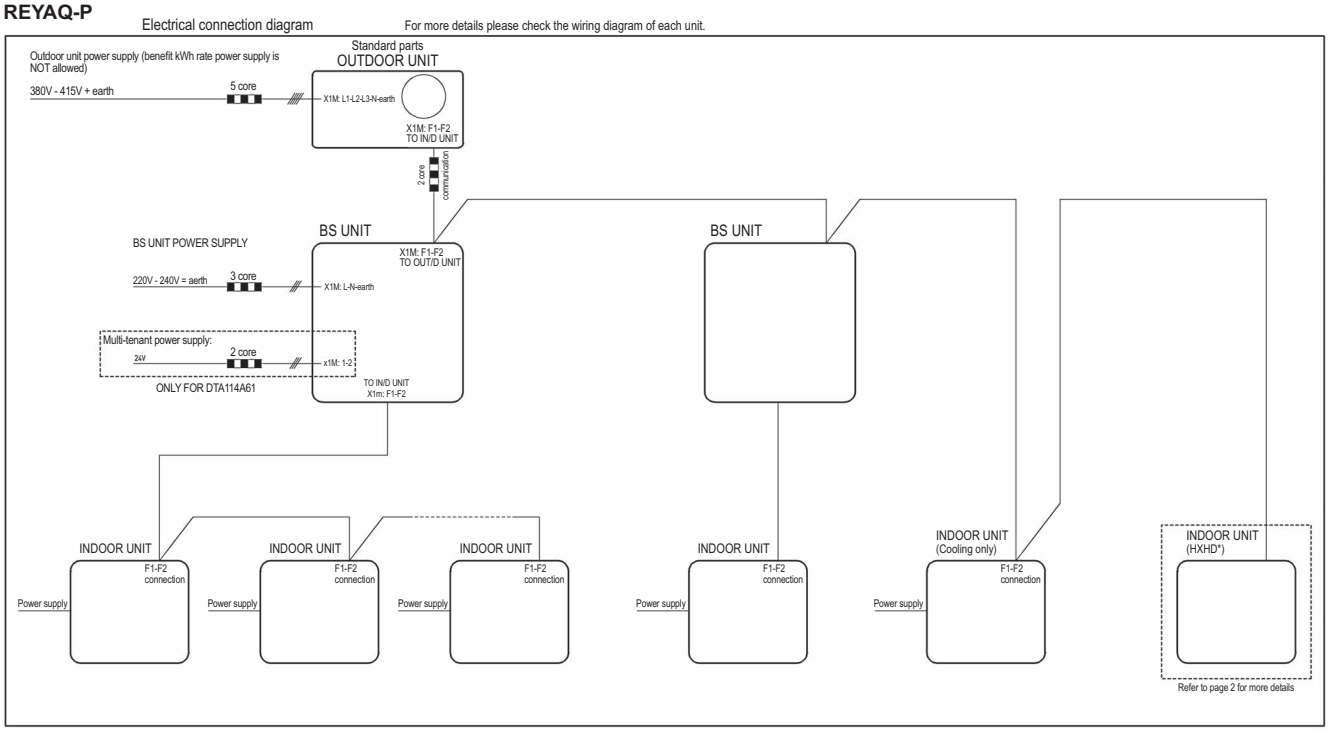

NOTES

In case of signal cable or communication cable. Keep minimum distance to power cables > 25mm.

2TW60656-1(1)

HXHD-A
REYAQ-P

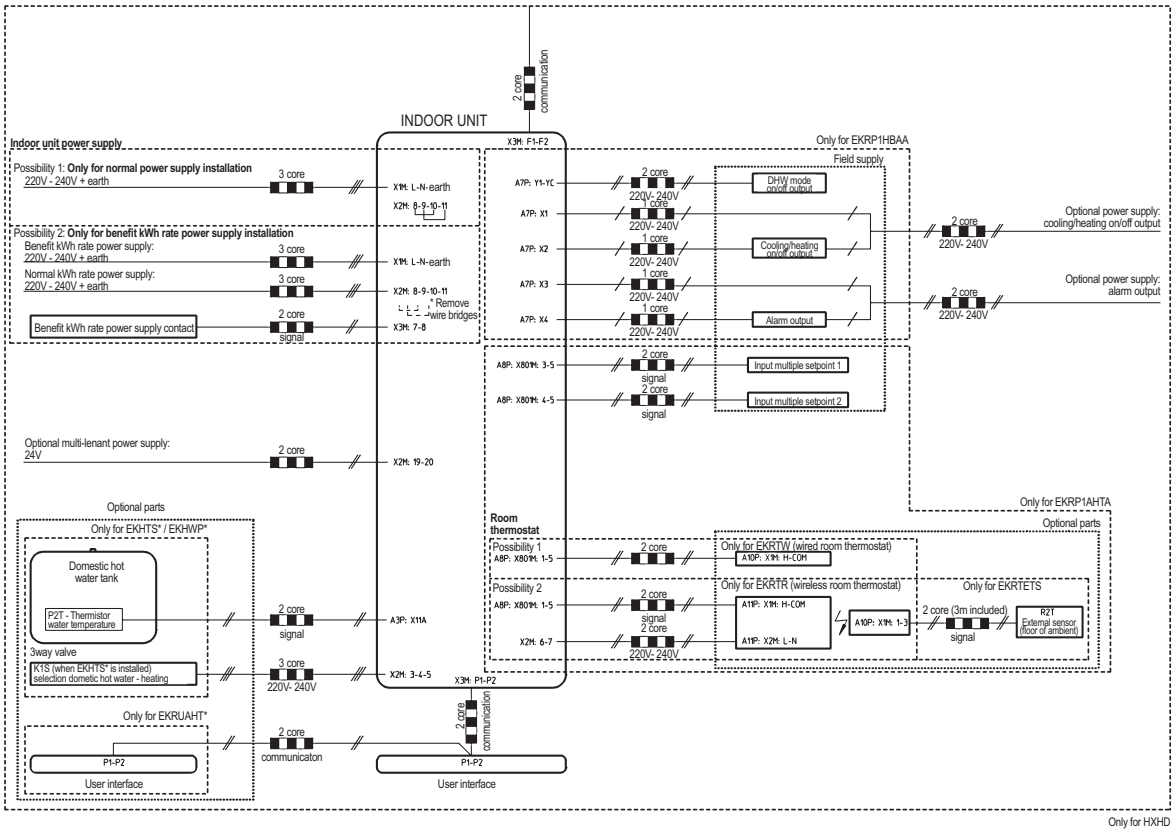

2TW60656-1(2)

11 Sound data

11 - 1 Sound Power Spectrum

REYAQ10P

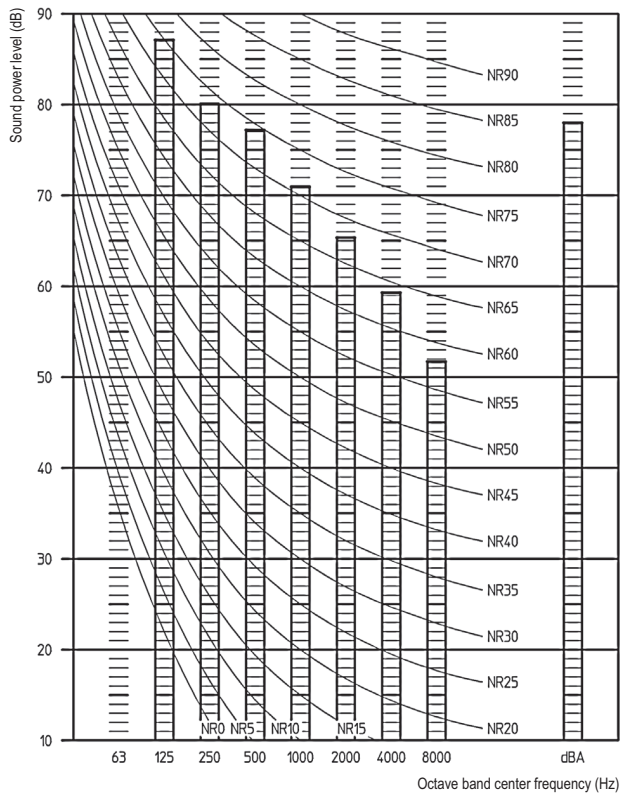

3TW59927-2A

REYAQ12P

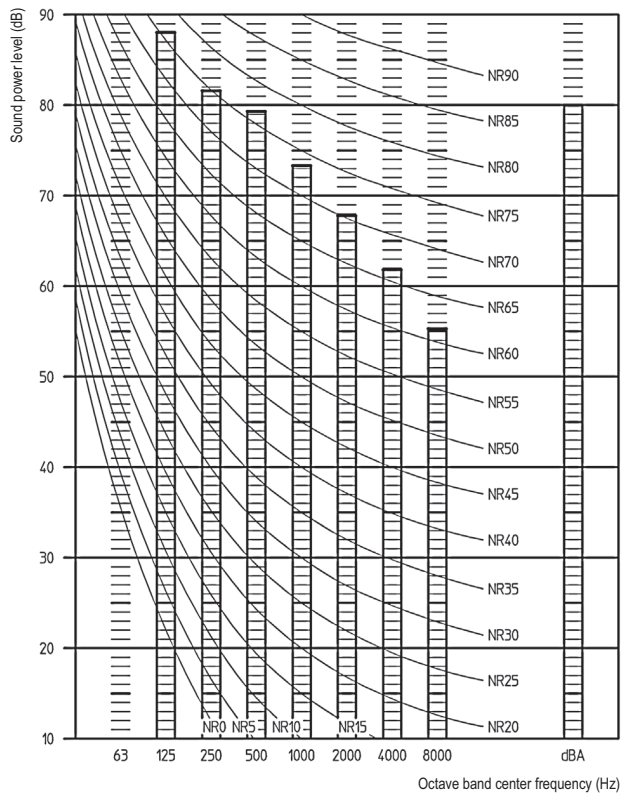

3TW59927-2A

REYAQ14P

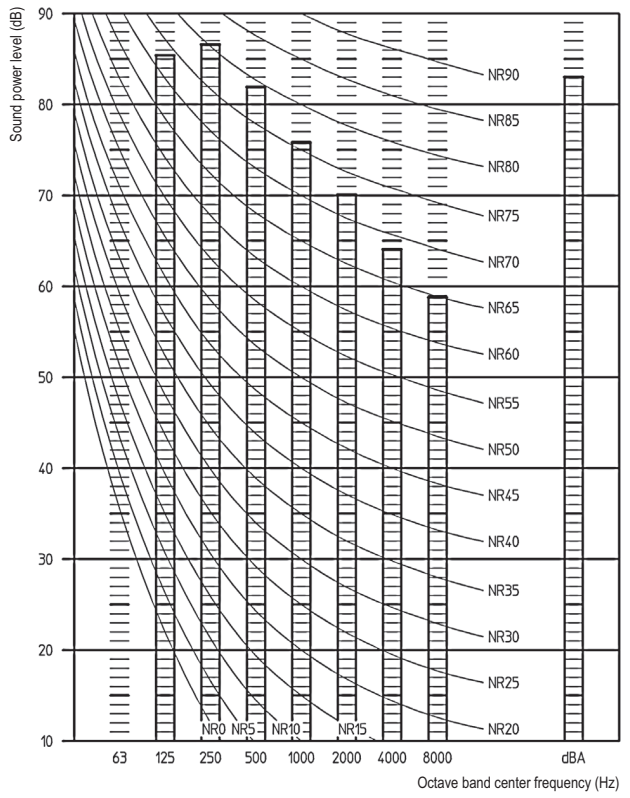

3TW59927-2A

REYAQ16P

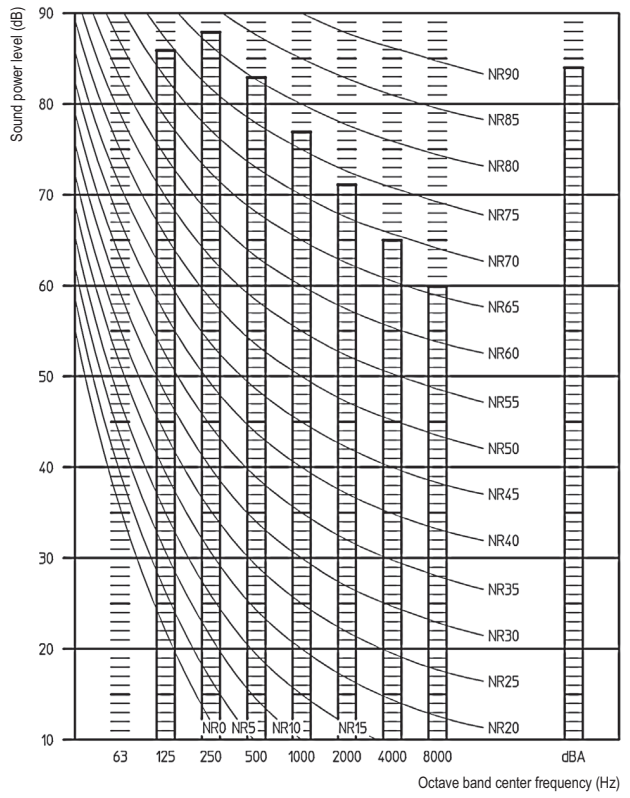

3TW59927-2A

11 Sound data

11 - 2 Sound Pressure Spectrum

REYAQ10P

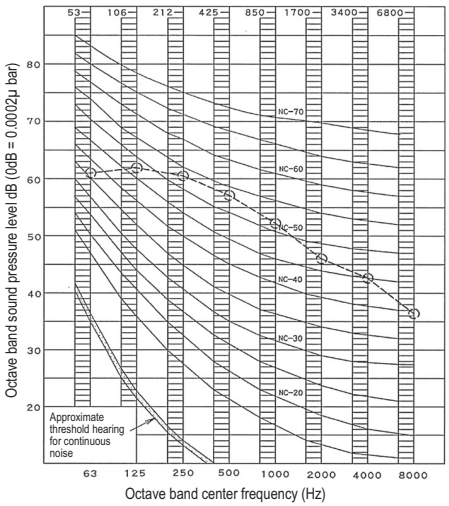

3TW59927-1A

NOTES

Scale	50 Hz
A	58
C	66

1 Over All (dB):
(B,G,N is already rectified)
2 Operating conditions:
Power source: 380-415V 50Hz
3 Measuring place: Anechoic chamber (conversion value)
4 The operating sound is measured in anechoic chamber,
if it is measured under the actual installation conditions,
it is normally over the set value due to enviromental noise and sound reflection.
5 Location of microphone.

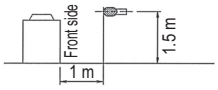

REYAQ12P

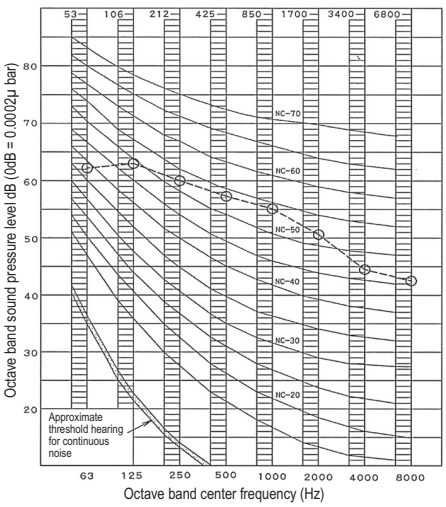

3TW59927-1A

NOTES

Scale	50 Hz
A	60
C	67

1 Over All (dB):
(B,G,N is already rectified)
2 Operating conditions:
Power source: 380-415V 50Hz
3 Measuring place: Anechoic chamber (conversion value)
4 The operating sound is measured in anechoic chamber,
if it is measured under the actual installation conditions,
it is normally over the set value due to enviromental noise and sound reflection.
5 Location of microphone.

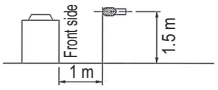

REYAQ14P

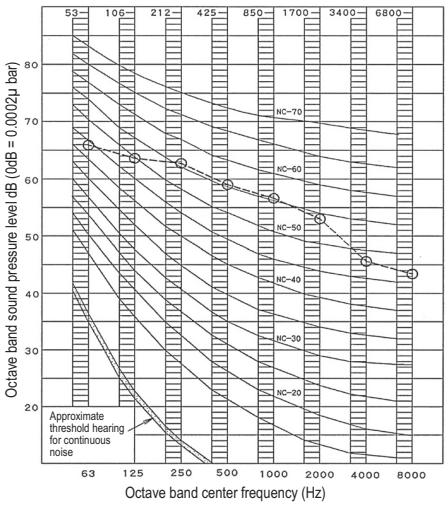

3TW59927-1A

NOTES

Scale	50 Hz
A	62
C	69

1 Over All (dB):
(B,G,N is already rectified)
2 Operating conditions:
Power source: 380-415V 50Hz
3 Measuring place: Anechoic chamber (conversion value)
4 The operating sound is measured in anechoic chamber,
if it is measured under the actual installation conditions,
it is normally over the set value due to enviromental noise and sound reflection.
5 Location of microphone.

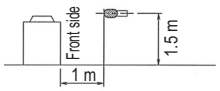

REYAQ16P

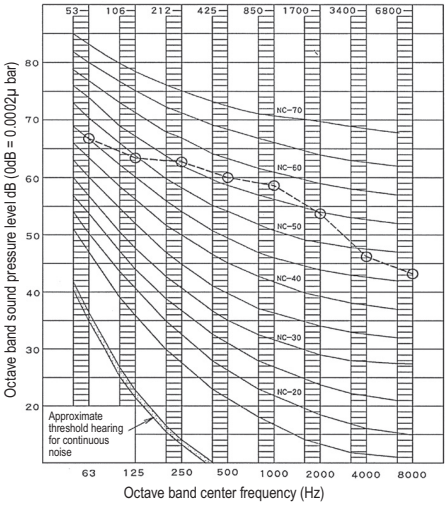

3TW59927-1A

NOTES

Scale	50 Hz
A	63
C	70

1 Over All (dB):
(B,G,N is already rectified)
2 Operating conditions:
Power source: 380-415V 50Hz
3 Measuring place: Anechoic chamber (conversion value)
4 The operating sound is measured in anechoic chamber,
if it is measured under the actual installation conditions,
it is normally over the set value due to enviromental noise and sound reflection.
5 Location of microphone.

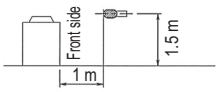

12 Operation range

12 - 1 Operation Range

HXHD-A
REYAQ-P

Space heating mode

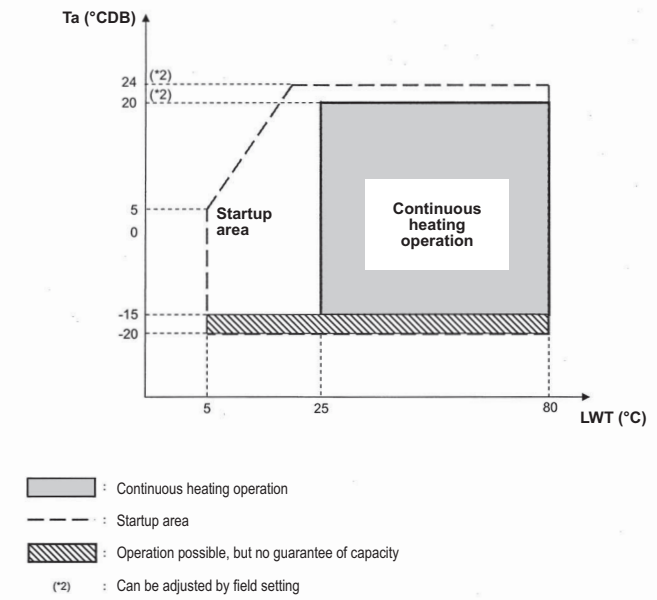

Domestic hot water mode

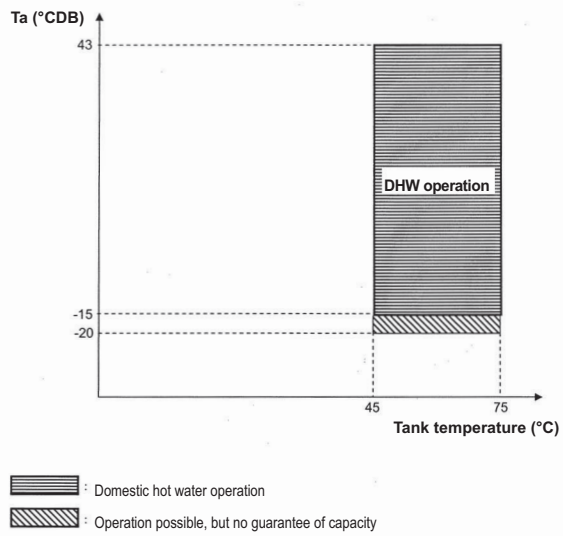

3TW60653-1A

REYAQ-P

Heating mode

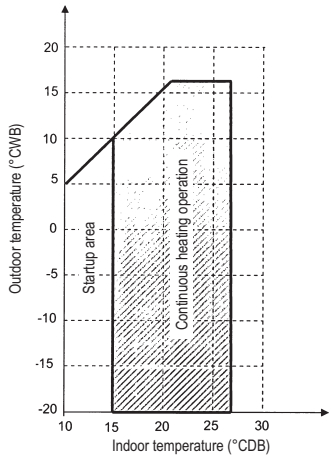

Cooling mode

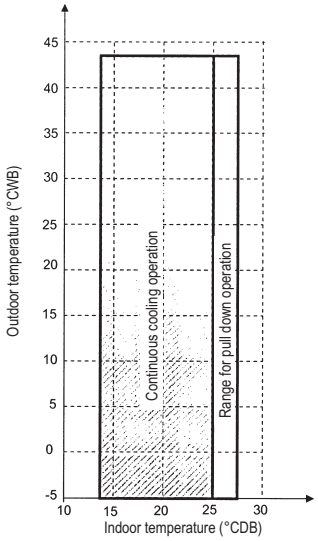

Remark

Operation range is valid for combination of REYAQ-P and direct expansion indoor units.

3TW60653-1A(2)

In all of us,
a green heart

Daikin's unique position as a manufacturer of air conditioning equipment, compressors and refrigerants has led to its close involvement in environmental issues. For several years Daikin has had the intention to become a leader in the provision of products that have limited impact on the environment. This challenge demands the eco design and development of a wide range of products and an energy management system, resulting in energy conservation and a reduction of waste.

VRV® products are not within the scope of the Eurovent certification programme.

The present publication is drawn up by way of information only and does not constitute an offer binding upon Daikin Europe N.V.. Daikin Europe N.V. has compiled the content of this publication to the best of its knowledge. No express or implied warranty is given for the completeness, accuracy, reliability or fitness for particular purpose of its content and the products and services presented therein. Specifications are subject to change without prior notice. Daikin Europe N.V. explicitly rejects any liability for any direct or indirect damage, in the broadest sense, arising from or related to the use and/or interpretation of this publication. All content is copyrighted by Daikin Europe N.V..

Daikin products are distributed by:

DAIKIN EUROPE N.V. Naamloze Vennootschap - Zandvoordestraat 300, B-8400 Oostende - Belgium - www.daikin.eu - BE 0412 120 336 - RPR Oostende

EEDEN11-200 • CD • 02/11 • Copyright Daikin
The present publication supersedes EEDEN10-200
Prepared in Belgium by Lannoo (www.lannooprint.be), a company whose concern for the environment is set in the EMAS and ISO 14001 systems.
Responsible Editor: Daikin Europe N.V., Zandvoordestraat 300, B-8400 Oostende