DAIKIN

SiBE12-908

# Service Manual

# Inverter Multi System with Humidifying

## G-Series

[Applied Models]

● Inverter Multi : Heat Pump

# Inverter Multi System with Humidifying G-Series

## ●Heat Pump

## Indoor Unit

**CTXU25G2V1B**
**CTXU35G2V1B**
**CTXU42G2V1B**
**CTXU50G2V1B**

## Outdoor Unit

**2MXU40GV1B**
**2MXU50GV1B**

1. Introduction ..... vi
1.1 Safety Cautions ..... vi
1.2 Used Icons ..... x

**Part 1 List of Functions ..... 1**

1. Functions ..... 2

**Part 2 Specifications ..... 4**

1. Specifications ..... 5
1.1 Indoor Units ..... 5
1.2 Outdoor Units ..... 6

**Part 3 Printed Circuit Board Connector Wiring Diagram ..... 8**

1. Printed Circuit Board Connector Wiring Diagram ..... 9
1.1 Indoor Units ..... 9
1.2 Outdoor Units ..... 11

**Part 4 Function and Control ..... 13**

1. Main Functions ..... 14
1.1 Frequency Principle ..... 14
1.2 Thermostat Control ..... 16
1.3 Automatic Operation ..... 17
1.4 Program Dry Function ..... 18
1.5 Airflow Direction Control ..... 19
1.6 Fan Speed Control for Indoor Units ..... 20
1.7 HUMID HEAT Operation ..... 21
1.8 Fresh Air Supply Ventilation ..... 26
1.9 2-AREA INTELLIGENT EYE ..... 28
1.10 Inverter POWERFUL Operation ..... 30
1.11 ECONO Mode ..... 31
1.12 NIGHT SET Mode ..... 32
1.13 Other Functions ..... 33
1.14 Table for Special Modes ..... 35
2. Function of Thermistor ..... 37
2.1 Heat Pump Model ..... 37
3. Control Specification ..... 39
3.1 Mode Hierarchy ..... 39
3.2 Automatic switching for HUMID HEAT operation room ..... 40
3.3 Frequency Control ..... 41
3.4 Controls at Mode Changing / Start-up ..... 43
3.5 Discharge Pipe Temperature Control ..... 44
3.6 Input Current Control ..... 45
3.7 Freeze-up Protection Control ..... 45
3.8 Heating Peak-cut Control ..... 46
3.9 Fan Control ..... 46
3.10 Liquid Compression Protection Function 2 ..... 47
3.11 Defrost Control ..... 47
3.12 Electronic Expansion Valve Control ..... 48
3.13 Malfunctions ..... 52

3.14 Forced Operation Mode .....53
3.15 Additional Function.....53

**Part 5 Installation / Operation Manual .....54**

1. Installation Manual .....55
   1.1 Indoor Units .....55
   1.2 Outdoor Units .....67
2. System Configuration.....79
3. Operation Manual.....80
   3.1 Names of Parts.....80
   3.2 AUTO · DRY · COOL · HEAT · FAN Operation .....82
   3.3 Adjusting the Airflow Direction.....84
   3.4 HUMID HEAT Operation .....86
   3.5 FRESH AIR SUPPLY VENTILATION .....88
   3.6 COMFORT AIRFLOW and INTELLIGENT EYE Operation.....89
   3.7 POWERFUL and OUTDOOR UNIT QUIET Operation .....91
   3.8 ECONO Operation .....92
   3.9 TIMER Operation .....93
   3.10 WEEKLY TIMER Operation .....95
   3.11 Note for Multi System .....100

**Part 6 Service Diagnosis.....101**

1. Service Check Function .....103
   1.1 Failure Diagnosis with Multi-Colored Indicator Lamp .....103
   1.2 Failure Diagnosis by LED Indication .....103
   1.3 Failure Diagnosis by Remote Controller.....104
2. Troubleshooting .....107
   2.1 Error Code Indication by Remote Controller .....107
   2.2 Air conditioner does not run. .....109
   2.3 Air conditioner runs but does not cool (heat).....112
   2.4 When operation starts, safety breaker works. .....114
   2.5 Air conditioner makes big noise and vibration. .....116
   2.6 Air is not humidified enough. .....117
   2.7 Indoor Unit PCB Abnormality .....120
   2.8 Freeze-up Protection Control or Heating Peak-cut Control.....121
   2.9 Fan Motor (DC Motor) or Related Abnormality.....123
   2.10 Thermistor or Related Abnormality (Indoor Unit).....125
   2.11 Humidity Sensor Abnormality .....126
   2.12 Signal Transmission Error (Indoor Unit - Outdoor Unit) .....127
   2.13 Incompatible Power Supply between Indoor Unit and Outdoor Unit ....129
   2.14 Incomplete Setting for Hose Length .....130
   2.15 Freeze-up Protection in Other Rooms / Unspecified Voltage (between Indoor and Outdoor Units) .....131
   2.16 Outdoor Unit PCB Abnormality.....132
   2.17 OL Activation (Compressor Overload) .....133
   2.18 Compressor Lock .....134
   2.19 DC Fan Lock .....135
   2.20 Input Overcurrent Detection .....136
   2.21 Discharge Pipe Temperature Control.....138
   2.22 High Pressure Control in Cooling .....139
   2.23 Compressor Sensor System Abnormality .....141

2.24 Damper Abnormality ..... 142
2.25 Position Sensor Abnormality ..... 143
2.26 DC Voltage / DC Current Sensor Abnormality ..... 145
2.27 Thermistor or Related Abnormality (Outdoor Unit) ..... 146
2.28 Abnormal Temperature in Electrical Box ..... 148
2.29 Temperature Rise in Radiation Fin ..... 150
2.30 Output Overcurrent ..... 152
2.31 Refrigerant Shortage ..... 154
2.32 Over Voltage Protection / Low Voltage Protection ..... 156
2.33 Outdoor Unit PCB Abnormality or Communication Circuit Abnormality ..... 157
2.34 Signal Transmission Error on Outdoor Unit PCB ..... 160
2.35 Fan Motor System Abnormality / Fan Lock ..... 162
2.36 Heater Wire Abnormality ..... 163
2.37 Humidifying Fan Outlet Thermistor Abnormality / Heater Temperature Abnormality ..... 165
2.38 Lights-out of Microcomputer Status Lamp ..... 167

3. Check ..... 168
3.1 Fan Motor Connector Output Check ..... 168
3.2 Thermistor Resistance Check ..... 169
3.3 Installation Condition Check ..... 170
3.4 Outdoor Fan System Check (DC Motor) ..... 170
3.5 Power Supply Waveform Check ..... 171
3.6 Main Circuit Electrolytic Capacitor Check ..... 171
3.7 Refrigerant System Check ..... 172
3.8 “Inverter Checker” Check ..... 173
3.9 Power Transistor Check ..... 174
3.10 Discharge Pressure Check ..... 175
3.11 Electronic Expansion Valve Check ..... 176
3.12 Rotating Pulse Input on Outdoor Unit PCB Check ..... 177
3.13 Main Circuit Short Check ..... 179
3.14 Four Way Valve Performance Check ..... 180

**Part 7 Removal Procedure ..... 181**

1. Indoor Unit ..... 182
1.1 Removal of Air filter ..... 182
1.2 Removal of Front Panel ..... 185
1.3 Removal of Front Grille ..... 187
1.4 Removal of Horizontal Blades and Vertical Blades ..... 190
1.5 Removal of Electrical Box ..... 194
1.6 Removal of PCB ..... 197
1.7 Removal of the Connecting Duct ..... 202
1.8 Removal of Heat Exchanger ..... 203
1.9 Removal of Swing Motor ..... 206
1.10 Removal of Fan Rotor ..... 210

2. Outdoor Unit ..... 213
2.1 Removal of Humidifier Unit ..... 213
2.2 Removal of Heater ASSY / Humidifying Rotor (Moisture Adsorption Element) / Humidifying Rotor Motor ..... 216
2.3 Removal of Damper Motor ..... 220
2.4 Removal of Limit Switch / Humidifying Thermistor ..... 222

2.5 Removal of the Fan-valve-duct ASSY .....225
2.6 Removal of Hygroscopic Fan Rotor / Hygroscopic Fan Motor .....227
2.7 Removal of Panels and Plates .....228
2.8 Removal of Electrical Box .....231
2.9 Removal of PCB .....236
2.10 Removal of Sound Blanket .....242
2.11 Removal of the Propeller Fan / Fan Motor .....245
2.12 Removal of Thermistors .....248
2.13 Removal of Compressor .....250
2.14 Removal of the Four Way Valve / Electronic Expansion Valve .....252

**Part 8 Others .....254**

1. Others .....255
1.1 Trial Operation .....255
1.2 Jumper Settings .....256
1.3 Application of Silicon Grease to a Power Transistor and a Diode Bridge .....257

**Part 9 Appendix .....258**

1. Piping Diagrams .....259
1.1 Indoor Units .....259
1.2 Outdoor Units .....260
2. Wiring Diagrams .....261
2.1 Indoor Units .....261
2.2 Outdoor Units .....262

# 1. Introduction

## 1.1 Safety Cautions

**Cautions and Warnings**

- Be sure to read the following safety cautions before conducting repair work.
- The caution items are classified into "⚠ **Warning**" and "⚠ **Caution**". The "⚠ **Warning**" items are especially important since they can lead to death or serious injury if they are not followed closely. The "⚠ **Caution**" items can also lead to serious accidents under some conditions if they are not followed. Therefore, be sure to observe all the safety caution items described below.
- About the pictograms

△ This symbol indicates the item for which caution must be exercised.
The pictogram shows the item to which attention must be paid.

◯ This symbol indicates the prohibited action.
The prohibited item or action is shown in the illustration or near the symbol.

● This symbol indicates the action that must be taken, or the instruction.
The instruction is shown in the illustration or near the symbol.

- After the repair work is complete, be sure to conduct a test operation to ensure that the equipment operates normally, and explain the cautions for operating the product to the customer.

### 1.1.1 Cautions Regarding Safety of Workers

| ⚠ **Warning** | |
|---|---|
| Be sure to disconnect the power cable plug from the plug socket before disassembling the equipment for repair.<br>Working on the equipment that is connected to the power supply may cause an electrical shook.<br>If it is necessary to supply power to the equipment to conduct the repair or inspecting the circuits, do not touch any electrically charged sections of the equipment. | |
| If the refrigerant gas is discharged during the repair work, do not touch the discharged refrigerant gas.<br>The refrigerant gas may cause frostbite. | |
| When disconnecting the suction or discharge pipe of the compressor at the welded section, evacuate the refrigerant gas completely at a well-ventilated place first.<br>If there is a gas remaining inside the compressor, the refrigerant gas or refrigerating machine oil discharges when the pipe is disconnected, and it may cause injury. | |
| If the refrigerant gas leaks during the repair work, ventilate the area. The refrigerant gas may generate toxic gases when it contacts flames. | |
| The step-up capacitor supplies high-voltage electricity to the electrical components of the outdoor unit.<br>Be sure to discharge the capacitor completely before conducting repair work.<br>A charged capacitor may cause an electrical shock. | |
| Do not start or stop the air conditioner operation by plugging or unplugging the power cable plug.<br>Plugging or unplugging the power cable plug to operate the equipment may cause an electrical shock or fire. | |

| Warning | |
|---|---|
| Be sure to wear a safety helmet, gloves, and a safety belt when working at a high place (more than 2m). Insufficient safety measures may cause a fall accident. | |
| In case of R410A refrigerant models, be sure to use pipes, flare nuts and tools for the exclusive use of the R410A refrigerant.<br>The use of materials for R22 refrigerant models may cause a serious accident such as a damage of refrigerant cycle as well as an equipment failure. | |

| Caution | |
|---|---|
| Do not repair the electrical components with wet hands.<br>Working on the equipment with wet hands may cause an electrical shock. | |
| Do not clean the air conditioner by splashing water.<br>Washing the unit with water may cause an electrical shock. | |
| Be sure to provide the grounding when repairing the equipment in a humid or wet place, to avoid electrical shocks. | |
| Be sure to turn off the power switch and unplug the power cable when cleaning the equipment.<br>The internal fan rotates at a high speed, and cause injury. | |
| Be sure to conduct repair work with appropriate tools.<br>The use of inappropriate tools may cause injury. | |
| Be sure to check that the refrigerating cycle section has cooled down enough before conducting repair work.<br>Working on the unit when the refrigerating cycle section is hot may cause burns. | |
| Use the welder in a well-ventilated place.<br>Using the welder in an enclosed room may cause oxygen deficiency. | |

## 1.1.2 Cautions Regarding Safety of Users

| Warning | |
|---|---|
| Be sure to use parts listed in the service parts list of the applicable model and appropriate tools to conduct repair work. Never attempt to modify the equipment.<br>The use of inappropriate parts or tools may cause an electrical shock, excessive heat generation or fire. | |
| If the power cable and lead wires have scratches or deteriorated, be sure to replace them.<br>Damaged cable and wires may cause an electrical shock, excessive heat generation or fire. | |
| Do not use a joined power cable or extension cable, or share the same power outlet with other electrical appliances, since it may cause an electrical shock, excessive heat generation or fire. | |
| Be sure to use an exclusive power circuit for the equipment, and follow the local technical standards related to the electrical equipment, the internal wiring regulations, and the instruction manual for installation when conducting electrical work.<br>Insufficient power circuit capacity and improper electrical work may cause an electrical shock or fire. | |
| Be sure to use the specified cable for wiring between the indoor and outdoor units. Make the connections securely and route the cable properly so that there is no force pulling the cable at the connection terminals.<br>Improper connections may cause excessive heat generation or fire. | |
| When wiring between the indoor and outdoor units, make sure that the terminal cover does not lift off or dismount because of the cable.<br>If the cover is not mounted properly, the terminal connection section may cause an electrical shock, excessive heat generation or fire. | |
| Do not damage or modify the power cable.<br>Damaged or modified power cable may cause an electrical shock or fire.<br>Placing heavy items on the power cable, and heating or pulling the power cable may damage the cable. | |
| Do not mix air or gas other than the specified refrigerant (R410A / R22) in the refrigerant system.<br>If air enters the refrigerating system, an excessively high pressure results, causing equipment damage and injury. | |
| If the refrigerant gas leaks, be sure to locate the leaking point and repair it before charging the refrigerant. After charging refrigerant, make sure that there is no refrigerant leak.<br>If the leaking point cannot be located and the repair work must be stopped, be sure to perform pump-down and close the service valve, to prevent the refrigerant gas from leaking into the room. The refrigerant gas itself is harmless, but it may generate toxic gases when it contacts flames, such as fan and other heaters, stoves and ranges. | |
| When relocating the equipment, make sure that the new installation site has sufficient strength to withstand the weight of the equipment.<br>If the installation site does not have sufficient strength and if the installation work is not conducted securely, the equipment may fall and cause injury. | |

| Warning | |
|---|---|
| Check to make sure that the power cable plug is not dirty or loose, then insert the plug into a power outlet securely.<br>If the plug has dust or loose connection, it may cause an electrical shock or fire. | |
| Be sure to install the product correctly by using the provided standard installation frame.<br>Incorrect use of the installation frame and improper installation may cause the equipment to fall, resulting in injury. | For unitary type only |
| Be sure to install the product securely in the installation frame mounted on the window frame.<br>If the unit is not securely mounted, it may fall and cause injury. | For unitary type only |
| When replacing the coin battery in the remote controller, be sure to disposed of the old battery to prevent children from swallowing it.<br>If a child swallows the coin battery, see a doctor immediately. | |

| Caution | |
|---|---|
| Installation of a leakage breaker is necessary in some cases depending on the conditions of the installation site, to prevent electrical shocks. | |
| Do not install the equipment in a place where there is a possibility of combustible gas leaks.<br>If the combustible gas leaks and remains around the unit, it may cause a fire. | |
| Check to see if the parts and wires are mounted and connected properly, and if the connections at the soldered or crimped terminals are secure.<br>Improper installation and connections may cause excessive heat generation, fire or an electrical shock. | |
| If the installation platform or frame has corroded, replace it.<br>Corroded installation platform or frame may cause the unit to fall, resulting in injury. | |
| Check the grounding, and repair it if the equipment is not properly grounded.<br>Improper grounding may cause an electrical shock. | |

| Caution | |
|---|---|
| Be sure to measure the insulation resistance after the repair, and make sure that the resistance is 1 MΩ or higher.<br>Faulty insulation may cause an electrical shock. | |
| Be sure to check the drainage of the indoor unit after the repair.<br>Faulty drainage may cause the water to enter the room and wet the furniture and floor. | |
| Do not tilt the unit when removing it.<br>The water inside the unit may spill and wet the furniture and floor. | |
| Be sure to install the packing and seal on the installation frame properly.<br>If the packing and seal are not installed properly, water may enter the room and wet the furniture and floor. | For unitary type only |

## 1.2 Used Icons

Icons are used to attract the attention of the reader to specific information. The meaning of each icon is described in the table below:

| Icon | Type of Information | Description |
|---|---|---|
| Note: | Note | A “note” provides information that is not indispensable, but may nevertheless be valuable to the reader, such as tips and tricks. |
| Caution | Caution | A “caution” is used when there is danger that the reader, through incorrect manipulation, may damage equipment, loose data, get an unexpected result or has to restart (part of) a procedure. |
| Warning | Warning | A “warning” is used when there is danger of personal injury. |
| | Reference | A “reference” guides the reader to other places in this binder or in this manual, where he/she will find additional information on a specific topic. |

# Part 1
# List of Functions

1. Functions.....2

# 1. Functions

| Category | Functions | CTXU25-50G2V1B | Category | Functions | CTXU25-50G2V1B |
|---|---|---|---|---|---|
| Basic Function | Inverter (with Inverter Power Control) | ○ | Health & Clean | Air-Purifying Filter | — |
| | Operation Limit for Cooling (°CDB) | — | | | |
| | Operation Limit for Heating (°CWB) | — | | Photocatalytic Deodorizing Filter | — |
| | PAM Control | — | | Air-Purifying Filter with Photocatalytic Deodorizing Function | — |
| | Standby Electricity Saving | — | | Titanium Apatite Photocatalytic Air-Purifying Filter | ○ |
| Compressor | Oval Scroll Compressor | — | | | |
| | Swing Compressor | — | | Air Filter (Prefilter) | ○ |
| | Rotary Compressor | — | | Wipe-clean Flat Panel | ○ |
| | Reluctance DC Motor | — | | Washable Grille | — |
| Comfortable Airflow | Power-Airflow Flap | — | | Mold Proof Operation | — |
| | Power-Airflow Dual Flaps | ○ | | Heating Dry Operation | — |
| | Wide-Angle Louvers | ○ | | Good-Sleep Cooling Operation | — |
| | Vertical Auto-Swing (Up and Down) | ○ | | Fresh Air Supply Ventilation | ○ |
| | Horizontal Auto-Swing (Right and Left) | ○ | Timer | Weekly Timer | ○ |
| | 3-D Airflow | ○ | | 24-Hour ON/OFF Timer | ○ |
| | Comfort Airflow Mode | ○ | | Night Set Mode | ○ |
| Comfort Control | Auto Fan Speed | ○ | Worry Free “Reliability & Durability” | Auto-Restart (after Power Failure) | ○ |
| | Indoor Unit Quiet Operation | ○ | | Self-Diagnosis (Digital, LED) Display | ○ |
| | Night Quiet Mode (Automatic) | — | | Wiring Error Check | — |
| | Outdoor Unit Quiet Operation (Manual) | — | | Anticorrosion Treatment of Outdoor Heat Exchanger | — |
| | INTELLIGENT EYE | — | | | |
| | 2-Area INTELLIGENT EYE | ○ | Flexibility | Multi-Split / Split Type Compatible Indoor Unit | — |
| | Quick Warming Function | — | | | |
| | Hot-Start Function | ○ | | H/P, C/O Compatible Indoor Unit | — |
| | Automatic Defrosting | — | | Flexible Voltage Correspondence | — |
| Operation | Automatic Operation | ○ | | High Ceiling Application | — |
| | Humidifying Operation | ○ | | Chargeless | — |
| | Program Dry Function | ○ | | Either Side Drain (Right or Left) | ○ |
| | Fan Only | ○ | | Power Selection | — |
| Lifestyle Convenience | New POWERFUL Operation (Non-Inverter) | — | Remote Control | 5-Rooms Centralized Controller (Option) | ○ |
| | Inverter POWERFUL Operation | ○ | | Remote Control Adaptor (Normal Open-Pulse Contact) (Option) | ○ |
| | Priority-Room Setting | — | | | |
| | Cooling / Heating Mode Lock | — | | Remote Control Adaptor (Normal Open Contact) (Option) | ○ |
| | HOME LEAVE Operation | — | | | |
| | ECONO Mode | ○ | | DIII-NET Compatible (Adaptor) (Option) | ○ |
| | Indoor Unit ON/OFF Switch | ○ | Remote Controller | Wireless | ○ |
| | Multi-colored Indicator | ○ | | Wired | — |
| | R/C with Back Light | ○ | | | |
| | Temperature Display | — | | | |

**Note:** ○ : Holding Functions
— : No Functions

| Category | Functions | 2MXU40/50GV1B | Category | Functions | 2MXU40/50GV1B |
|---|---|---|---|---|---|
| Basic Function | Inverter (with Inverter Power Control) | ○ | Health & Clean | Air-Purifying Filter | — |
| | Operation Limit for Cooling (°CDB) | 10 ~ 46 | | Photocatalytic Deodorizing Filter | — |
| | Operation Limit for Heating (°CWB) | –15 ~ 15.5 | | Air-Purifying Filter with Photocatalytic Deodorizing Function | — |
| | PAM Control | ○ | | Titanium Apatite Photocatalytic Air-Purifying Filter | — |
| | Standby Electricity Saving | — | | Air Filter (Prefilter) | — |
| Compressor | Oval Scroll Compressor | — | | Wipe-clean Flat Panel | — |
| | Swing Compressor | ○ | | Washable Grille | — |
| | Rotary Compressor | — | | Mold Proof Operation | — |
| | Reluctance DC Motor | ○ | | Heating Dry Operation | — |
| Comfortable Airflow | Power-Airflow Flap | — | | Good-Sleep Cooling Operation | — |
| | Power-Airflow Dual Flaps | — | | Fresh Air Supply Ventilation | ○ |
| | Wide-Angle Louvers | — | Timer | Weekly Timer | — |
| | Vertical Auto-Swing (Up and Down) | — | | 24-Hour ON/OFF Timer | — |
| | Horizontal Auto-Swing (Right and Left) | — | | Night Set Mode | — |
| | 3-D Airflow | — | Worry Free “Reliability & Durability” | Auto-Restart (after Power Failure) | — |
| | Comfort Airflow Mode | — | | Self-Diagnosis (Digital, LED) Display | ○ |
| Comfort Control | Auto Fan Speed | — | | Wiring-Error Check | — |
| | Indoor Unit Quiet Operation | — | | Anticorrosion Treatment of Outdoor Heat Exchanger | ○ |
| | Night Quiet Mode (Automatic) | — | Flexibility | Multi-Split / Split Type Compatible Indoor Unit | — |
| | Outdoor Unit Quiet Operation (Manual) | ○ | | H/P, C/O Compatible Indoor Unit | — |
| | INTELLIGENT EYE | — | | Flexible Voltage Correspondence | — |
| | 2-Area INTELLIGENT EYE | — | | High Ceiling Application | — |
| | Quick Warming Function | ○ | | Chargeless | 20m |
| | Hot-Start Function | — | | Either Side Drain (Right or Left) | — |
| | Automatic Defrosting | ○ | | Power-Selection | — |
| Operation | Automatic Operation | — | Remote Control | 5-Rooms Centralized Controller (Option) | — |
| | Humidifying Operation | — | | Remote Control Adaptor (Normal Open-Pulse Contact) (Option) | — |
| | Program Dry Function | — | | Remote Control Adaptor (Normal Open Contact) (Option) | — |
| | Fan Only | — | | DIII-NET Compatible (Adaptor) (Option) | — |
| Lifestyle Convenience | New POWERFUL Operation (Non-Inverter) | — | Remote Controller | Wireless | — |
| | Inverter POWERFUL Operation | — | | Wired | — |
| | Priority-Room Setting | ○ | | | |
| | Cooling / Heating Mode Lock | — | | | |
| | HOME LEAVE Operation | — | | | |
| | ECONO Mode | — | | | |
| | Indoor Unit ON/OFF Switch | — | | | |
| | Multi-colored Indicator | — | | | |
| | R/C with Back Light | — | | | |
| | Temperature Display | — | | | |

**Note:** ○ : Holding Functions
— : No Functions

# Part 2
# Specifications

1. Specifications .....5
1.1 Indoor Units .....5
1.2 Outdoor Units .....6

# 1. Specifications

## 1.1 Indoor Units

**50Hz 220-230-240V**

| Model | | | | CTXU25G2V1B | | CTXU35G2V1B | |
|---|---|---|---|---|---|---|---|
| | | | | Cooling | Heating | Cooling | Heating |
| Rated Capacity | | | | 2.5kW Class | | 3.5kW Class | |
| Front Panel Color | | | | White | | White | |
| Airflow Rate | | m³/min (cfm) | H | 9.1 (321) | 9.8 (346) | 10.4 (367) | 10.6 (374) |
| | | | M | 7.1 (252) | 7.9 (280) | 7.7 (270) | 8.5 (302) |
| | | | L | 5.2 (182) | 6.2 (217) | 4.8 (170) | 6.4 (226) |
| | | | SL | 3.7 (130) | 5.2 (183) | 3.5 (125) | 5.4 (191) |
| Fan | Type | | | Cross Flow Fan | | Cross Flow Fan | |
| | Motor Output | | W | 23 | | 23 | |
| | Speed | | Steps | 5 Steps, Quiet, Auto | | 5 Steps, Quiet, Auto | |
| Air Direction Control | | | | Right, Left, Horizontal, Downward | | Right, Left, Horizontal, Downward | |
| Air Filter | | | | Removable / Washable / Mildew Proof | | Removable / Washable / Mildew Proof | |
| Running Current (Rated) | | | A | 0.09-0.08-0.08 | 0.10-0.10-0.09 | 0.12-0.12-0.11 | 0.13-0.13-0.12 |
| Power Consumption (Rated) | | | W | 18 | 21 | 26 | 28 |
| Power Factor | | | % | 90.9-97.8-93.8 | 95.5-91.3-97.2 | 98.5-94.2-98.5 | 97.9-93.6-97.2 |
| Temperature Control | | | | Microcomputer Control | | Microcomputer Control | |
| Dimensions (H×W×D) | | | mm | 295×800×215 | | 295×800×215 | |
| Packaged Dimensions (H×W×D) | | | mm | 274×870×366 | | 274×870×366 | |
| Weight | | | kg | 9 | | 10 | |
| Gross Weight | | | kg | 13 | | 14 | |
| Operation Sound ★ | H/M/L/SL | | dBA | 38/32/25/22 | 39/34/28/25 | 42/34/26/23 | 42/36/29/26 |
| Sound Power | H | | dBA | 54 | 55 | 58 | 58 |
| Heat Insulation | | | | Both Liquid and Gas Pipes | | Both Liquid and Gas Pipes | |
| Piping Connection | | Liquid | mm | ϕ 6.4 | | ϕ 6.4 | |
| | | Gas | mm | ϕ 9.5 | | ϕ 9.5 | |
| | | Drain | mm | ϕ18.0 | | ϕ18.0 | |
| Drawing No. | | | | 3D063377 | | 3D063378 | |

| Model | | | | CTXU42G2V1B | | CTXU50G2V1B | |
|---|---|---|---|---|---|---|---|
| | | | | Cooling | Heating | Cooling | Heating |
| Rated Capacity | | | | 4.2kW Class | | 5.0kW Class | |
| Front Panel Color | | | | White | | White | |
| Airflow Rate | | m³/min (cfm) | H | 9.1 (321) | 11.2 (395) | 10.2 (360) | 11.0 (388) |
| | | | M | 7.7 (273) | 9.4 (333) | 8.6 (305) | 9.3 (330) |
| | | | L | 6.3 (221) | 7.7 (271) | 7.0 (246) | 7.6 (267) |
| | | | SL | 5.4 (190) | 6.8 (240) | 6.0 (212) | 6.7 (236) |
| Fan | Type | | | Cross Flow Fan | | Cross Flow Fan | |
| | Motor Output | | W | 23 | | 23 | |
| | Speed | | Steps | 5 Steps, Quiet, Auto | | 5 Steps, Quiet, Auto | |
| Air Direction Control | | | | Right, Left, Horizontal, Downward | | Right, Left, Horizontal, Downward | |
| Air Filter | | | | Removable / Washable / Mildew Proof | | Removable / Washable / Mildew Proof | |
| Running Current (Rated) | | | A | 0.11-0.11-0.10 | 0.14-0.14-0.13 | 0.12-0.12-0.11 | 0.15-0.14-0.14 |
| Power Consumption (Rated) | | | W | 24 | 30 | 26 | 32 |
| Power Factor | | | % | 99.2-94.9-100.0 | 97.4-93.2-96.2 | 98.5-94.2-98.5 | 97.0-99.4-95.2 |
| Temperature Control | | | | Microcomputer Control | | Microcomputer Control | |
| Dimensions (H×W×D) | | | mm | 295×800×215 | | 295×800×215 | |
| Packaged Dimensions (H×W×D) | | | mm | 274×870×366 | | 274×870×366 | |
| Weight | | | kg | 10 | | 10 | |
| Gross Weight | | | kg | 14 | | 14 | |
| Operation Sound ★ | H/M/L/SL | | dBA | 42/38/33/30 | 42/38/33/30 | 43/39/34/31 | 44/39/34/31 |
| Sound Power | H | | dBA | 58 | 58 | 59 | 60 |
| Heat Insulation | | | | Both Liquid and Gas Pipes | | Both Liquid and Gas Pipes | |
| Piping Connection | | Liquid | mm | ϕ 6.4 | | ϕ 6.4 | |
| | | Gas | mm | ϕ 9.5 | | ϕ12.7 | |
| | | Drain | mm | ϕ18.0 | | ϕ18.0 | |
| Drawing No. | | | | 3D063379 | | 3D063380 | |

**Note:**
1. ★: In humidifying operation, the operation sound increases by about 2dB in the indoor unit.
2. The humidifying capacity is 450ml/h under the following condition.
   Outdoor air temperature: 7°CDB / 6°CWB
   Humidifying hose length: 4.0m
   Airflow rate of indoor unit: H tap

| Conversion Formulae |
|---|
| kcal/h=kW×860<br>Btu/h=kW×3414<br>cfm=m³/min×35.3 |

# 1.2 Outdoor Units

**50Hz 220-230-240V**

| Model | | | | 2MXU40GV1B | |
|---|---|---|---|---|---|
| | | | | Cooling | Heating |
| Capacity | | | kW | — | |
| Power Consumption | | | W | — | |
| Running Current | | | A | — | |
| Casing Color | | | | Ivory White | |
| Compressor | Type | | | Hermetically Sealed Swing Type | |
| | Model | | | 1YC23ABXD | |
| | Motor Output | | W | 600 | |
| Refrigerant Oil | Model | | | FVC50K | |
| | Charge | | L | 0.45 | |
| Refrigerant | Type | | | R-410A | |
| | Charge | | kg | 1.20 | |
| Airflow Rate | | m³/min | HH | 36 | 32 |
| | | | H | 33 | 32 |
| | | | L | 30 | 32 |
| | | cfm | HH | 1,271 | 1,130 |
| | | | H | 1,165 | 1,130 |
| | | | L | 1,059 | 1,130 |
| Fan | Type | | | Propeller | |
| | Motor Output | | W | 50 | |
| Starting Current | | | A | 4.6 | |
| Dimensions (H×W×D) | | | mm | 675×765×285 | |
| Packaged Dimensions (H×W×D) | | | mm | 739×907×390 | |
| Weight | | | kg | 45 | |
| Gross Weight | | | kg | 49 | |
| Operation Sound ★ | | | dBA | 47 | 48 |
| Sound Power | | | dBA | 62 | — |
| Piping Connection | | Liquid | mm | ϕ 6.4×2 | |
| | | Gas | mm | ϕ 9.5×2 | |
| | | Drain | mm | ϕ18 | |
| Heat Insulation | | | | Both Liquid & Gas Pipes | |
| No. of Wiring Connection | | | | 3 for Power Supply, 4 for Interunit Wiring | |
| Max. Interunit Piping Length | | | m | 30 (for Total of Each Room) | |
| | | | m | 15 (for One Room) | |
| Min. Interunit Piping Length | | | m | 3 (for One Room) | |
| Amount of Additional Charge | | | g/m | 20 (20m or more) | |
| Max. Installation Height Difference | | | m | 15 (between Indoor Unit and Outdoor Unit) | |
| | | | m | 7.5 (between Indoor Units) | |
| Drawing No. | | | | 3D063328A | |

**Note:**

1. The data are based on the conditions shown in the table below.

| Cooling | Heating | Piping Length |
|---|---|---|
| Indoor ; 27°CDB/19°CWB<br>Outdoor ; 35°CDB | Indoor ; 20°CDB<br>Outdoor ; 7°CDB/6°CWB | 5m |

| Conversion Formulae |
|---|
| kcal/h=kW×860<br>Btu/h=kW×3414<br>cfm=m³/min×35.3 |

2. ★: In humidifying operation, the operation sound increases by about 3dB in the outdoor unit.

## 50Hz 220-230-240V

| Model | | | | 2MXU50GV1B | |
|---|---|---|---|---|---|
| | | | | Cooling | Heating |
| Capacity | | | kW | — | |
| Power Consumption | | | W | — | |
| Running Current | | | A | — | |
| Casing Color | | | | Ivory White | |
| Compressor | Type | | | Hermetically Sealed Swing Type | |
| | Model | | | 2YC36BXD | |
| | Motor Output | | W | 1,100 | |
| Refrigerant Oil | Model | | | FVC50K | |
| | Charge | | L | 0.65 | |
| Refrigerant | Type | | | R-410A | |
| | Charge | | kg | 1.60 | |
| Airflow Rate | | m³/min | HH | 37 | 34 |
| | | | H | 34 | 34 |
| | | | L | 34 | 34 |
| | | cfm | HH | 1,306 | 1,200 |
| | | | H | 1,200 | 1,200 |
| | | | L | 1,200 | 1,200 |
| Fan | Type | | | Propeller | |
| | Motor Output | | W | 50 | |
| Starting Current | | | A | 6.3 | |
| Dimensions (H×W×D) | | | mm | 675×765×285 | |
| Packaged Dimensions (H×W×D) | | | mm | 739×907×390 | |
| Weight | | | kg | 49 | |
| Gross Weight | | | kg | 54 | |
| Operation Sound ★ | | | dBA | 48 | 50 |
| Sound Power | | | dBA | 63 | — |
| Piping Connection | | Liquid | mm | ϕ 6.4×2 | |
| | | Gas | mm | ϕ 9.5×1, ϕ12.7×1 | |
| | | Drain | mm | ϕ18.0 | |
| Heat Insulation | | | | Both Liquid and Gas Pipes | |
| No. of Wiring Connection | | | | 3 for Power Supply, 4 for Interunit Wiring | |
| Max. Interunit Piping Length | | | m | 30 (for Total of Each Room) | |
| | | | m | 15 (for One Room) | |
| Min. Interunit Piping Length | | | m | 3 (for One Room) | |
| Amount of Additional Charge | | | g/m | 20 (20m or more) | |
| Max. Installation Height Difference | | | m | 15 (between Indoor Unit and Outdoor Unit) | |
| | | | m | 7.5 (between Indoor Units) | |
| Drawing No. | | | | 3D063330A | |

**Note:**

1. The data are based on the conditions shown in the table below.

| Cooling | Heating | Piping Length |
|---|---|---|
| Indoor ; 27°CDB/19°CWB<br>Outdoor ; 35°CDB | Indoor ; 20°CDB<br>Outdoor ; 7°CDB/6°CWB | 5m |

| Conversion Formulae |
|---|
| kcal/h=kW×860<br>Btu/h=kW×3414<br>cfm=m³/min×35.3 |

2. ★: In humidifying operation, the operation sound increases by about 3dB in the outdoor unit.

# Part 3
# Printed Circuit Board Connector Wiring Diagram

1. Printed Circuit Board Connector Wiring Diagram.....9
1.1 Indoor Units.....9
1.2 Outdoor Units.....11

# 1. Printed Circuit Board Connector Wiring Diagram

## 1.1 Indoor Units

**Connectors**

**PCB(1) (Control PCB)**

| | | |
|---|---|---|
| 1) | S1 | Connector for DC fan motor |
| 2) | S21 | Connector for centralized control (HA) |
| 3) | S25 | Connector for INTELLIGENT EYE sensor PCB |
| 4) | S32 | Connector for heat exchanger thermistor |
| 5) | S41 | Connector for swing motor |
| 6) | S46 | Connector for display PCB |
| 7) | S47 | Connector for signal receiver PCB |

**PCB(2) (Signal Receiver PCB)**

| | | |
|---|---|---|
| 1) | S48 | Connector for control PCB |

**PCB(3) (Display PCB)**

| | | |
|---|---|---|
| 1) | S49 | Connector for control PCB |

**PCB(4) (INTELLIGENT EYE sensor PCB)**

| | | |
|---|---|---|
| 1) | S26 | Connector for control PCB |

**Note:** Other designations

**PCB(1) (Control PCB)**

| | | |
|---|---|---|
| 1) | V1 | Varistor |
| 2) | JA | Address setting jumper |
| | JB | Fan speed setting when compressor is OFF on thermostat |
| | JC | Power failure recovery function (auto-restart) |
| | | ∗ Refer to page 256 for detail. |
| 3) | LED A | LED for service monitor (green) |
| 4) | FU1 (F1U) | Fuse (3.15A / 250V) |

**PCB(3) (Display PCB)**

| | | |
|---|---|---|
| 1) | SW1 (S1W) | Forced operation ON / OFF switch |
| 2) | LED1 | LED for operation (multi-color) |
| 3) | LED2 | LED for timer (yellow) |
| 4) | LED3 | LED for INTELLIGENT EYE (green) |
| 5) | RTH1 (R1T) | Room temperature thermistor |

## PCB Detail

### PCB(1): Control PCB

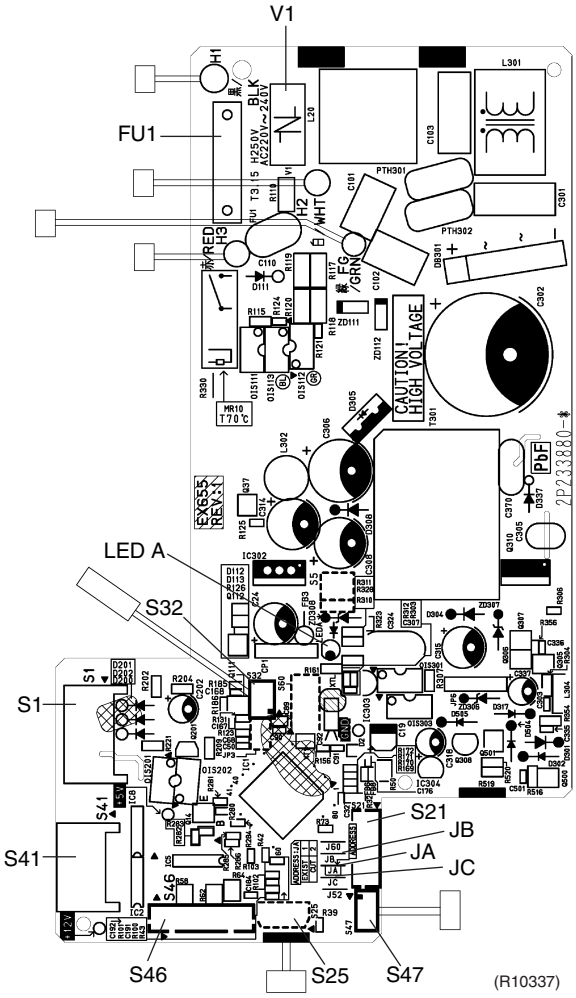


### PCB(2): Signal Receiver PCB

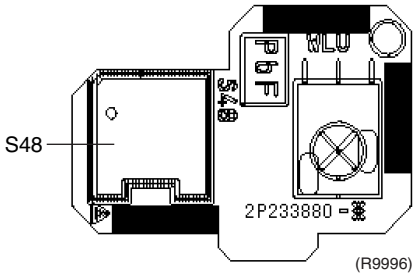


### PCB(3): Display PCB

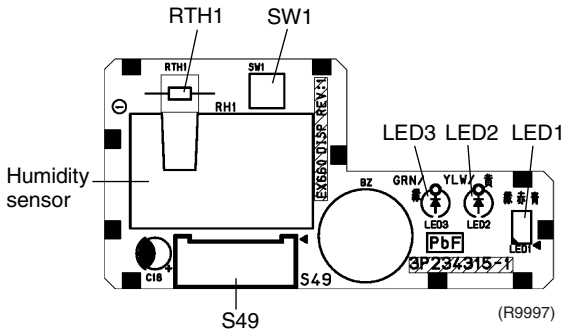


### PCB(4): INTELLIGENT EYE sensor PCB

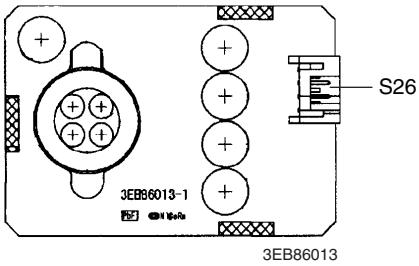

# 1.2 Outdoor Units

**Connectors**

**PCB (1) (Control PCB)**

| | |
|---|---|
| 1) S20 | Connector for electronic expansion valve coil A port |
| 2) S21 | Connector for electronic expansion valve coil B port |
| 3) S22 | Connector for damper motor |
| 4) S23 | Connector for rotor motor |
| 5) S40 | Connector for overload protector |
| 6) S45 | Connector for terminal strip (thermal fuse) |
| 7) S70 | Connector for DC fan motor |
| 8) S72 | Connector for humidifying fan motor |
| 9) S80 | Connector for four way valve coil |
| 10) S90 | Connector for thermistor (outdoor air, heat exchanger, discharge pipe) |
| 11) S91 | Connector for thermistor (gas pipe) |
| 12) S92 | Connector for thermistor (liquid pipe) |
| 13) S501 | Connector for limit switch |
| 14) HK1, HK2, HK3 | Connector for hygroscopic fan motor |
| 15) HH1, HH2 | Connector for humidifying heater |

**Note:** Other Designations

**PCB (1) (Control PCB)**

| | |
|---|---|
| 1) LED A | Service monitor LED (green) |
| 2) FU1, FU2 | Fuse (3.15A/250V) |
| 3) FU3 | Fuse (30A/250V) |
| 4) J9, J10 | Jumper for priority room setting (Refer to page 40) |

## PCB Detail

### PCB (1): Control PCB

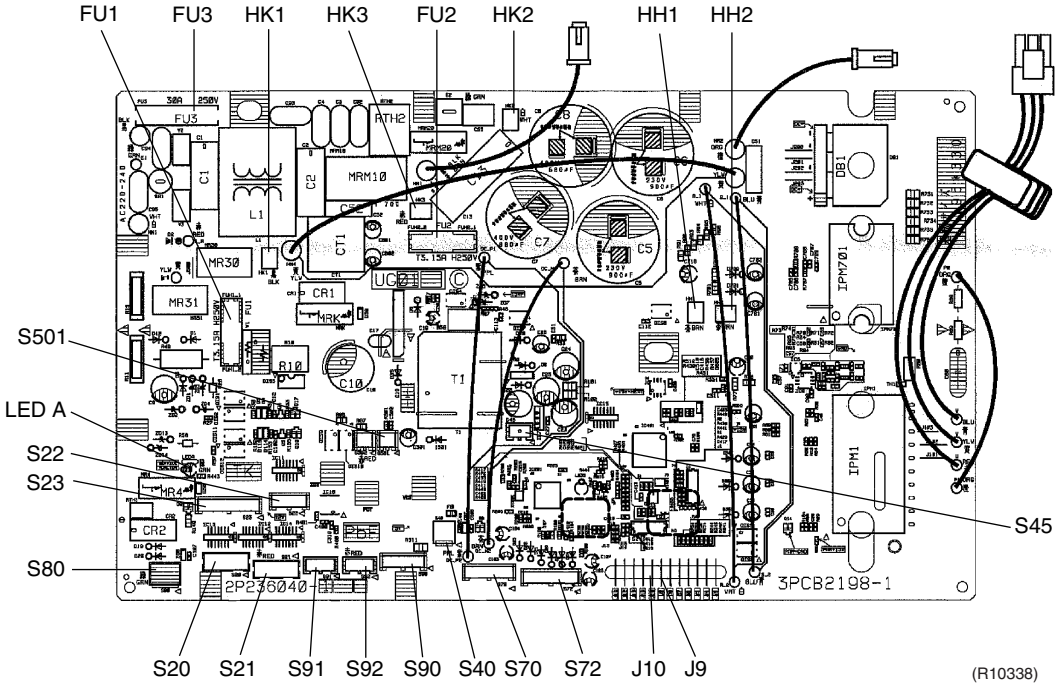

# Part 4
# Function and Control

1. Main Functions ..... 14
1.1 Frequency Principle ..... 14
1.2 Thermostat Control ..... 16
1.3 Automatic Operation ..... 17
1.4 Program Dry Function ..... 18
1.5 Airflow Direction Control ..... 19
1.6 Fan Speed Control for Indoor Units ..... 20
1.7 HUMID HEAT Operation ..... 21
1.8 Fresh Air Supply Ventilation ..... 26
1.9 2-AREA INTELLIGENT EYE ..... 28
1.10 Inverter POWERFUL Operation ..... 30
1.11 ECONO Mode ..... 31
1.12 NIGHT SET Mode ..... 32
1.13 Other Functions ..... 33
1.14 Table for Special Modes ..... 35
2. Function of Thermistor ..... 37
2.1 Heat Pump Model ..... 37
3. Control Specification ..... 39
3.1 Mode Hierarchy ..... 39
3.2 Automatic switching for HUMID HEAT operation room ..... 40
3.3 Frequency Control ..... 41
3.4 Controls at Mode Changing / Start-up ..... 43
3.5 Discharge Pipe Temperature Control ..... 44
3.6 Input Current Control ..... 45
3.7 Freeze-up Protection Control ..... 45
3.8 Heating Peak-cut Control ..... 46
3.9 Fan Control ..... 46
3.10 Liquid Compression Protection Function 2 ..... 47
3.11 Defrost Control ..... 47
3.12 Electronic Expansion Valve Control ..... 48
3.13 Malfunctions ..... 52
3.14 Forced Operation Mode ..... 53
3.15 Additional Function ..... 53

# 1. Main Functions

## 1.1 Frequency Principle

**Main Control Parameters**

The compressor is frequency-controlled during normal operation. The target frequency is set by the following 2 parameters coming from the operating indoor unit:

- The load condition of the operating indoor unit
- The difference between the room temperature and the set temperature

**Additional Control Parameters**

The target frequency is adapted by additional parameters in the following cases:

- Frequency restrictions
- Initial settings
- Forced cooling operation

**Inverter Principle**

To regulate the capacity, a frequency control is needed. The inverter makes it possible to vary the rotation speed of the compressor. The following table explains the conversion principle:

| Phase | Description |
|---|---|
| 1 | The supplied AC power source is converted into the DC power source for the present. |
| 2 | The DC power source is reconverted into the three phase AC power source with variable frequency.<br>■ When the frequency increases, the rotation speed of the compressor increases resulting in an increased refrigerant circulation. This leads to a higher amount of the heat exchange per unit.<br>■ When the frequency decreases, the rotation speed of the compressor decreases resulting in a decreased refrigerant circulation. This leads to a lower amount of the heat exchange per unit. |

**Drawing of Inverter**

The following drawing shows a schematic view of the inverter principle:

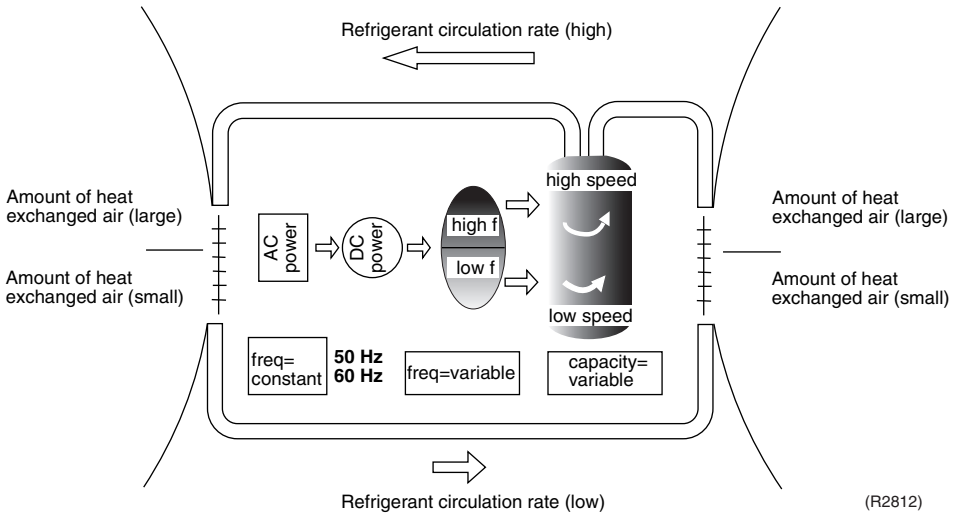

## Inverter Features

The inverter provides the following features:

- The regulating capacity can be changed according to the changes in the outdoor air temperature and cooling / heating load.
- Quick heating and quick cooling
  The compressor rotational speed is increased when starting the heating (or cooling). This enables a quick set temperature.

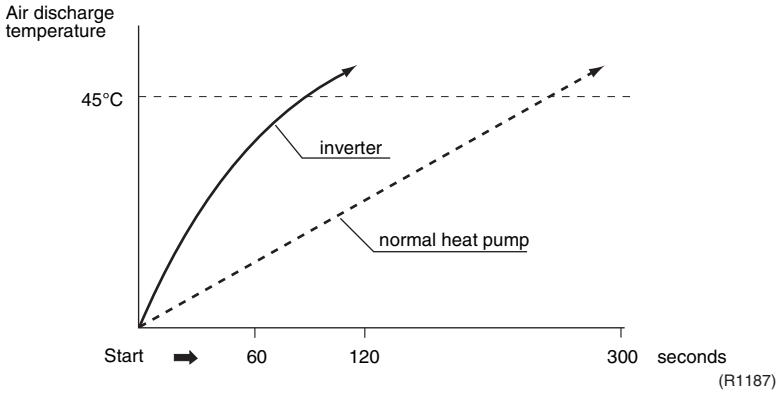


- Even during extreme cold weather, the high capacity is achieved. It is maintained even when the outdoor air temperature is 2°C.
- Comfortable air conditioning
  A detailed adjustment is integrated to ensure a fixed room temperature. It is possible to air condition with a small room temperature variation.
- Energy saving heating and cooling
  Once the set temperature is reached, the energy saving operation enables to maintain the room temperature at low power.

## Frequency Limits

The following table shows the functions that define the minimum and maximum frequency:

| Frequency limits | Limited during the activation of following functions |
|---|---|
| Low | ■ Four way valve operation compensation. Refer to page 43. |
| High | ■ Discharge pipe temperature control. Refer to page 44.<br>■ Input current control. Refer to page 45.<br>■ Compressor protection function. Refer to page 44.<br>■ Heating peak-cut control. Refer to page 46.<br>■ Freeze-up protection control. Refer to page 45.<br>■ Defrost control. Refer to page 47. |

## Forced Cooling Operation

For more information, refer to “Forced operation mode” on page 53.

# 1.2 Thermostat Control

Thermostat control is based on the difference between the room temperature and the set point.

**Thermostat OFF Condition**

- The temperature difference is in the zone A.

**Thermostat ON Condition**

- The temperature difference is above the zone C after being in the zone A.
- The system resumes from defrost control in any zones except A.
- The operation turns on in any zones except A.
- The monitoring time has passed while the temperature difference is in the zone B. (Cooling / Dry : 10 minutes, Heating : 10 seconds)

**Cooling / Dry**

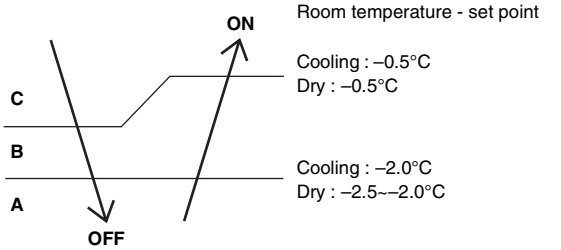


(R4668)

**Heating**

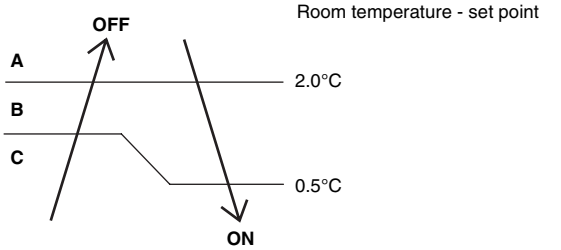


(R9424)

# 1.3 Automatic Operation

**Automatic Cooling / Heating Function**

When the AUTO mode is selected with the remote controller, the microcomputer automatically determines the operation mode from cooling and heating according to the room temperature and setting temperature at the time of the operation startup, and automatically operates in that mode.

The unit automatically switches the operation mode to cooling or heating to maintain the room temperature at the main unit setting temperature.

**Detailed Explanation of the Function**

1. Remote controller setting temperature is set as automatic cooling / heating setting temperature (18 to 30°C).
2. Main unit setting temperature equals remote controller setting temperature.
3. Mode switching point are as follows.
   ① Heating → Cooling switching point:
   Room temperature ≥ Main unit setting temperature +3.0 deg.
   ② Cooling → Heating switching point:
   Room temperature < Main unit setting temperature –2.5 deg.
   ③ Thermostat ON / OFF point is the same as the ON / OFF point of cooling or heating operation.
4. During initial operation
   Room temperature ≥ Remote controller setting temperature: Cooling operation
   Room temperature < Remote controller setting temperature: Heating operation

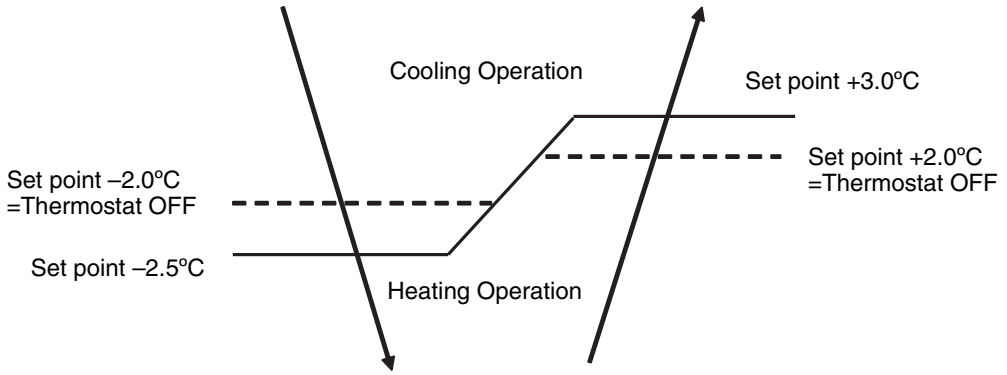


(R9417)

Ex: When the set point is 25°C

Cooling Operation → 23°C: Thermostat OFF → 22°C: Switch to Heating Operation
Heating Operation → 27°C: Thermostat OFF → 28°C: Switch to Cooling Operation

# 1.4 Program Dry Function

Program dry function removes humidity while preventing the room temperature from lowering. Since the microcomputer controls both the temperature and airflow volume, the temperature adjustment and fan adjustment buttons are inoperable in this mode.

**In Case of Inverter Units**

The microcomputer automatically sets the temperature and fan settings. The difference between the room temperature at startup and the temperature set by the microcomputer is divided into two zones. Then, the unit operates in the dry mode with an appropriate capacity for each zone to maintain the temperature and humidity at a comfortable level.

| Room temperature at startup | Set temperature X | Thermostat OFF point Y | Thermostat ON point Z |
|---|---|---|---|
| 24ºC or more | Room temperature at startup | X – 2.5ºC | X – 0.5ºC or Y + 0.5ºC (zone B) continues for 10 min. |
| 23.5ºC ~ 18ºC | | X – 2.0ºC | X – 0.5ºC or Y + 0.5ºC (zone B) continues for 10 min. |
| 17.5ºC ~ | 18ºC | X – 2.0ºC | X – 0.5ºC = 17.5ºC or Y + 0.5ºC (zone B) continues for 10 min. |

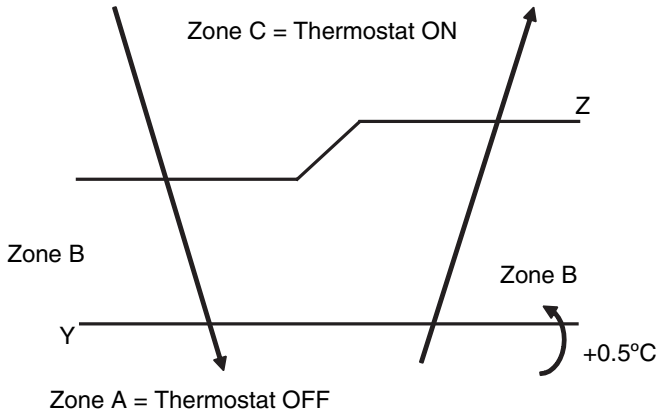


(R6841)

# 1.5 Airflow Direction Control

**Power-Airflow Dual Flaps**

The large flaps send a large volume of air downwards to the floor. The flap provides an optimum control area in cooling, heating, and dry mode.

**Heating Mode**
During heating mode, the large flap enables direct warm air straight downwards. The flap presses the warm air above the floor to reach the entire room.

**Cooling / Dry Mode**
During cooling or dry mode, the flap retracts into the indoor unit. Then, cool air can be blown far and pervaded all over the room.

**Wide-Angle Louvers**

The louvers, made of elastic synthetic resin, provide a wide range of airflow that guarantees a comfortable air distribution.

**Auto-Swing**

The following table explains the auto swing process for heating, cooling, dry, and fan :

| Vertical Swing (up and down) | | | Horizontal Swing (right and left: automatic) |
|---|---|---|---|
| Cooling / Dry | Heating | Fan | |
| 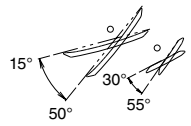  (R8315) | 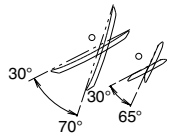  (R8316) | 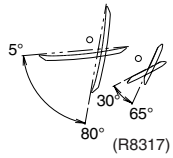  (R8317) | 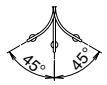  (R8318) |

**3-D Airflow**

- Alternative repetition of vertical and horizontal swing motions enables uniform air-conditioning of the entire room. This function is effective for starting the air conditioner.
- When the horizontal swing and vertical swing are both set to auto mode, the airflow become 3-D airflow and the horizontal swing and vertical swing motions are alternated. The order of swing motion is such that it turns counterclockwise, starting from the right upper point as viewed to the front side of the indoor unit.

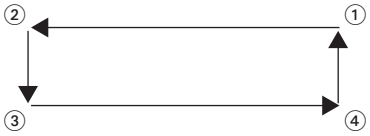

(R1024)

**COMFORT AIRFLOW**

The vertical swing flap is controlled not to blow the air directly on the person in the room.

| Heating | Cooling |
|---|---|
| 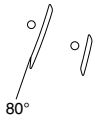  (R8413) | 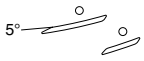  (R4302) |

# 1.6 Fan Speed Control for Indoor Units

**Control Mode**

The airflow rate can be automatically controlled depending on the difference between the set temperature and the room temperature. This is done through phase control and Hall IC control.

For more information about Hall IC, refer to the troubleshooting for fan motor on page 123.

**Phase Steps**

Phase control and fan speed control contains 9 steps: LLL, LL, SL, L, ML, M, MH, H and HH. In automatic fan speed operation, the step “SL” is not available.

| Step | Cooling | Heating |
|---|---|---|
| LLL | (R6833) | (R6834) |
| LL | | |
| L | | |
| ML | | |
| M | | |
| MH | | |
| H | | |
| HH (POWERFUL) | | |

= The airflow rate is automatically controlled within this range when the FAN setting button is set to automatic.

**Note:**

1. During POWERFUL operation, fan operates H tap + 50 rpm.
2. Fan stops during defrost operation.
3. In time of thermostat OFF, the fan rotates at the following speed.
   Cooling: The fan keeps rotating at the set tap.
   Heating: The fan stops.
   Dry: The fan stops after rotating for a few minutes at LL tap.

**Automatic Airflow Control for Heating**

On heating mode, the indoor fan speed is regulated according to the indoor heat exchanger temperature and the difference between the room temperature and the required set point.

**Automatic Airflow Control for Cooling**

The following drawing explains the principle of fan speed control for cooling:

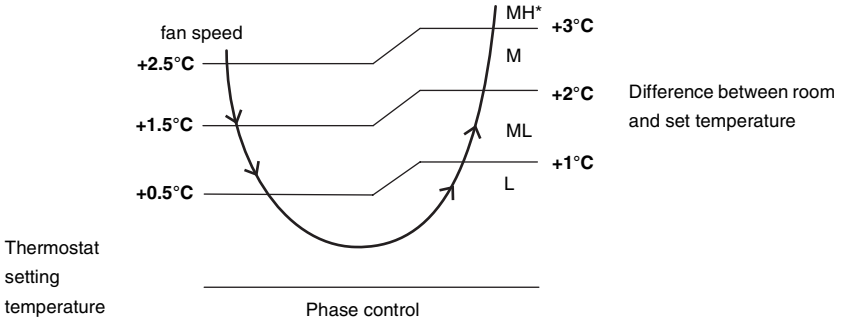


**Note:** *In automatic fan speed operation, upper limit is at M tap in 30 minutes from the operation start.

**COMFORT AIRFLOW Mode**

- The airflow rate is controlled automatically within the following steps.
  Cooling: L tap – MH tap (same as AUTOMATIC)
  Heating: ML tap – MH tap
- The latest command has the priority between POWERFUL and COMFORT AIRFLOW.

# 1.7 HUMID HEAT Operation

## Operation

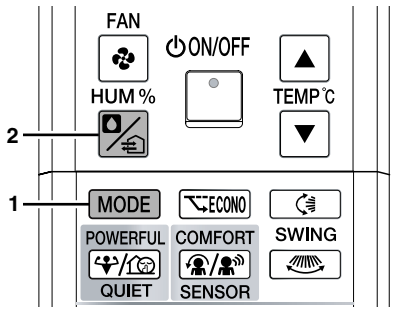


(R9409)

1. Select HEAT mode.
2. Set humidity.

∗ Refer to the operation manual for details.

## Features

■ **The-world's first new humidifying method has adopted**

What is new in this method is to intake vapor in the outdoor air with the hygroscopic element mounted in outdoor unit, and send to indoors. This has enabled powerful and speedy humidification apart from other company's methods which just absorb moisture in the indoor air.

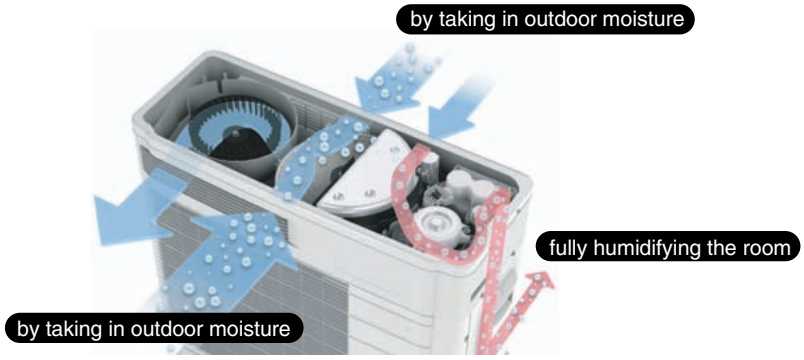


(R9410)

■ **The room is uniformly humidified.**

- Humidifier + heating operation by air conditioner
  Moisture gathers around the ceiling, as it is lighter than the air even if the humidifier is operated. The air on the floor is kept dry.

When using humidifier, moisture gathers around the ceiling.

(R3325)

- HUMID HEAT operation by URURU
  This air conditioner enables uniformly humidifying the room by circulating vapor with warm air.

The room is uniformly humidified.
(R3326)

- **Powerful humidifying ability**
  The humidifying capacity is 450 ml/h and equivalent to that of a normal humidifier.
  The value is measured at 7°C DB / 6°C WB of outdoor air and with 4.0 m of humidifying hose length.
- **No need for water supply nor cleaning**
  Water supply and cleaning are unnecessary as it does not have water tank, unlike humidifiers, and there is no proliferations of bacteria.
- **Humidity control**
  The target of the humidity level is 40 to 50%RH.
  You can select from Low, STD (standard), Hi (high), and CONT (continuous). The target humidity (%) cannot be set.

**Note**

- When the outdoor temperature and humidity are low, the humidifying capacity is decreased. In addition, the moisture in the room may not attain sufficient humidity when the ventilation volume is high, the preset temperature is high, or the preset humidity is HIGH.
- After the “humid heating” operation starts, the relative humidity in the room lowers temporarily. This phenomenon is caused by the increase of the saturation water vapor. Therefore, the humidity raises gradually after the temperature reaches the preset temperature.
- In the humidifying operation, the operation sound increases by about 2 dB in the indoor unit and 3 dB in the outdoor unit.
- This system does not suppose the storage of musical instruments or the like.

**Conditions for Humidifying Operation**

While heating mode, humidifying operation can be available when the following conditions 1 to 5 are met at the same time.

1. Indoor heat exchanger temperature is 12°C or more.
2. Outdoor temperature is from –10°C to 24°C (meanwhile, in test operation, up to 34°C is possible). Humidifying operation does not work under –10°C.
3. Approx. 1 minute has already passed after heating operation startup. (See Note.)
4. Heating operation does not work to its full capacity. (Meanwhile, the “continuous” humidification is selected, humidifying operation has the priority.)
5. Room humidity is under 70%RH.

**Note**

- Exclude the case when it is recovered from thermostat-off or when the defrosting operation finished.

## How to Check the Motion of Humidifying Operation

You can check whether the humidifying unit is in good working order. If you set HUMID HEAT test operation (refer to the installation manual for details), you can check even beyond the range of the conditions for humidifying operation.

1. Hygroscopic fan ..... Air is exhaled from the front exhaust outlet of outdoor unit.
2. Humidifying fan/heater/damper ... Warm air is blown from the duct of outdoor unit.
3. Humidification rotor ..... The rotor is rotating with top panel off.

As for the performance, estimate from psychrometric chart with the measured temperature and humidity of the outdoor air and of the humidified air (in front of the indoor outlet) using thermal hygrometer.

| Airflow rate ($m^3$/min) |
|---|
| 0.38 |

## Humidity Fluctuation by Temperature Settings

At HUMID HEAT operation, as room temperature rises, relative humidity is temporarily lowered. This is because as room temperature rises, relative humidity is lowered even if the moisture content is the same.

e.g.) The rise in the room temperature from 15°C to 25°C results in the fall in humidity from 40%RH to about 22%RH.

As humidifying operation starts concurrently with heating, humidity rises gradually as shown in the figure below.

Some room conditions (floor space, ventilation frequency, number of residents, etc.) and temperature settings (mostly higher settings) may result in unsatisfactory humidity settings.

Humidity Fluctuation on HUMID HEAT Operation

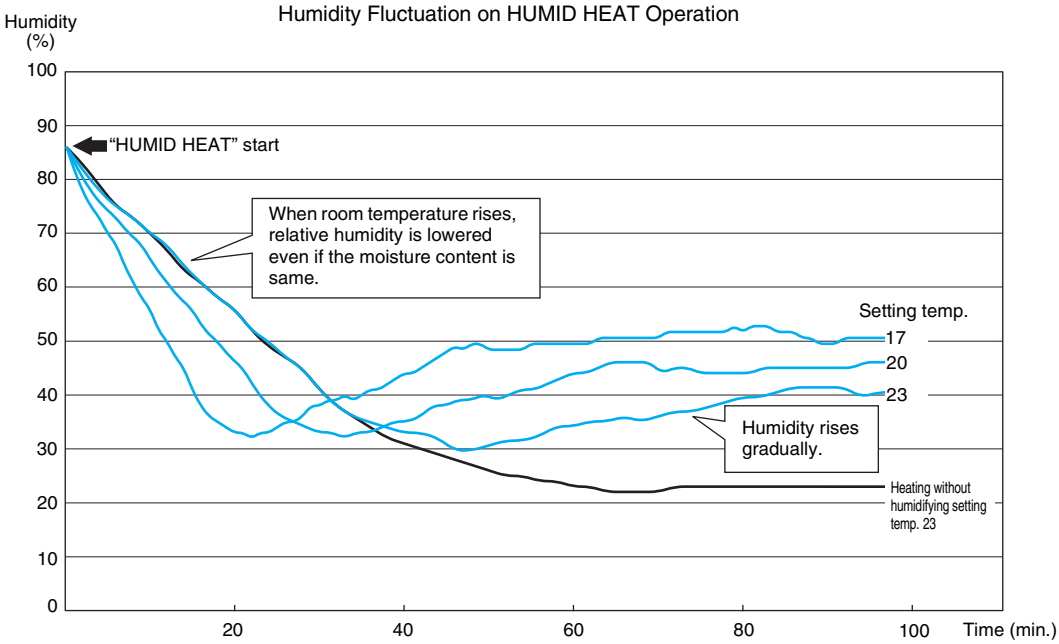


Measurement Conditions
Outdoor temp.: 7
HUMID HEAT operation setting:
Temp.; each setting as below, Humidity; "CONT" (Continuous)
Airflow rate setting: H tap
Area of the room: 26.4 m²
Humidifying hose length: 4.0 m
Ventilation: 0.75 times/hour
0.5 times of natural ventilation
0.25 times of humidity absorption by a carpet, a curtain, etc.

(R9411)

**Time chart for humidifying operation control**

Approx. 1 minute after HUMID HEAT operation start up, it repeats humidifying and drying alternately (to protect condensation for inside the hose).

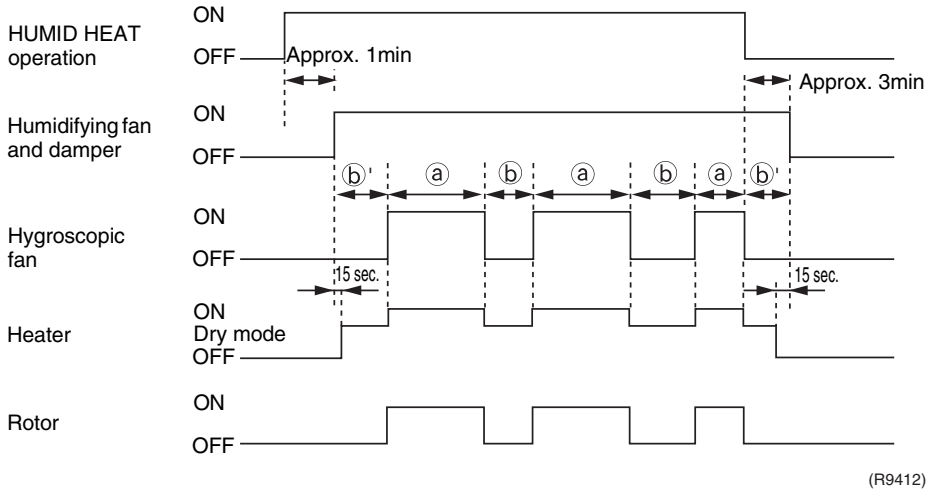


| | | |
|---|---|---|
| ⓐ. Humidifying time | Approx. 70min. | Decide time according to the outdoor temperature and hose length set by remote controller. |
| ⓑ. Drying time | Approx. 2~10min. | Decide time according to the hose length set by remote controller. |
| ⓑ'. Drying time | Approx. 2~10min. | |

■ **Time chart for HUMID HEAT operation on trial mode**

HUMID HEAT operation on trial mode works in the same sequence as HUMID HEAT operation, but about 30 minutes later it automatically stops.

■ **Remark**

When a room is spacious such as loft style or partitioned by accordion style curtain, the ventilation volume is large and may not sometimes reach the set humidity.

**Humidification performance by outdoor temperature**

The humidifying of this system is different from that of the normal humidifier. Therefore, the humidifying performance varies with the outdoor temperature or installation condition. Sufficient humidifying capacity may not be attained depending on the weather condition in operation.
When the outdoor temperature lowers by 5°C, the humidifying capacity is decreased by about 15%.
When the outdoor humidity lowers by 20%, the humidifying capacity is decreased by about 20%.

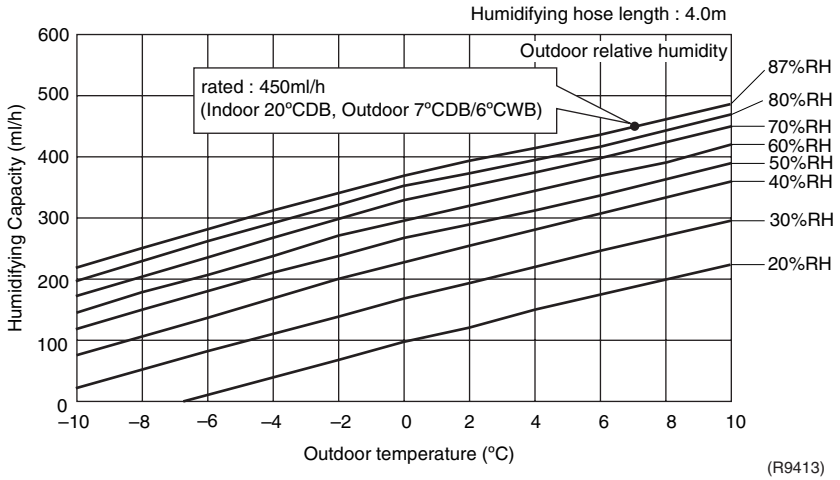


**Performance compensation by hose length**

The max. piping length is 15 m, but the longer the length of the humidifying hose becomes, the less the humidifying performance becomes.

Applicable hose (Hose diameter)
A : KPMH996A10S (I.D.25mm)
B : KPMH996A15S (I.D.30mm)

Hose length setting
a : ~3.0m, b : 3.1~4.0m, c : 4.1~6.0m, d : 6.1~8.0m,
e : 8.1~10.0m, f : 10.1m~

# 1.8 FRESH AIR SUPPLY VENTILATION

## Operation

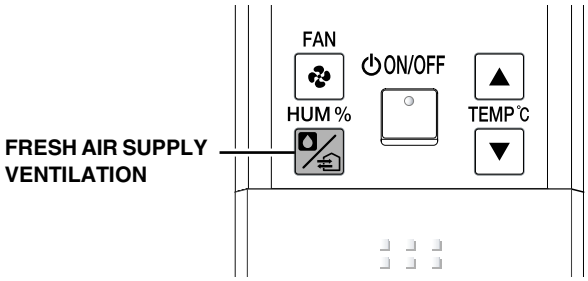


(R9425)

∗ Refer to the operation manual for details.

## Features

The air supply ventilation system using only fresh air.
Any contaminated outdoor air is purified in two stages of indoor unit and outdoor unit. Fresh air from which pollen and dust were removed is supplied into the room.

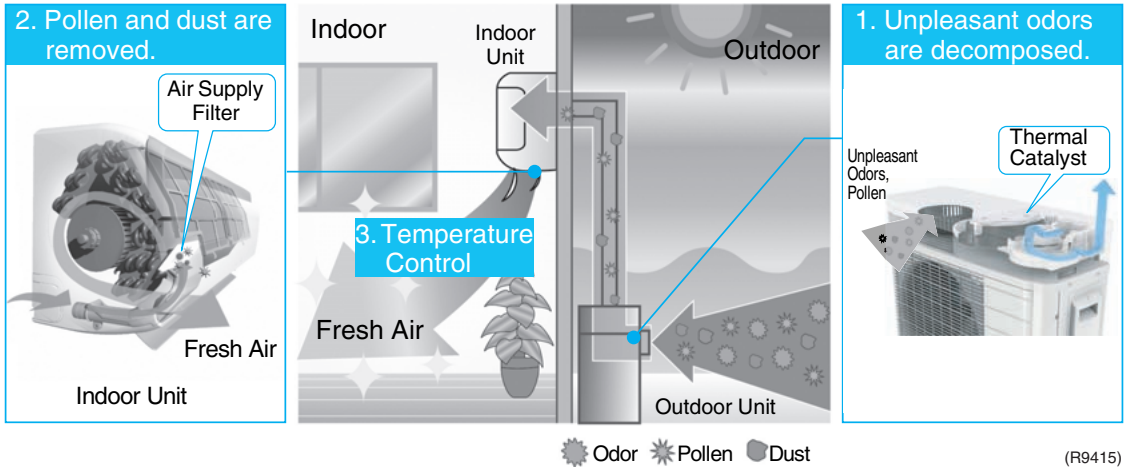


(R9415)

1. **Purifying air in the outdoor unit**
   Thermal catalyst containing in the humidifying rotor decomposes unpleasant odor and also removes exhaust gases (NOx, SOx).
   Manganese catalyst used to treat the automotive exhaust gas is adopted for the thermal catalyst.

2. **Purifying air in the indoor unit**
   The air supply filter is placed at the humidifying hose outlet of the indoor unit side.
   The air supply filter removes about 97% pollen and dust.

3. **Controlling temperature**
   The fresh air passed through the air supply filter is cooled (or heated) in the indoor unit and supplied into the room.
   You can keep comfortable temperature and also replace air because the ventilation is performed while temperature is controlled.

## ■ Ventilation System

The ventilation type is mainly divided into two. The convenient system is supply ventilation.

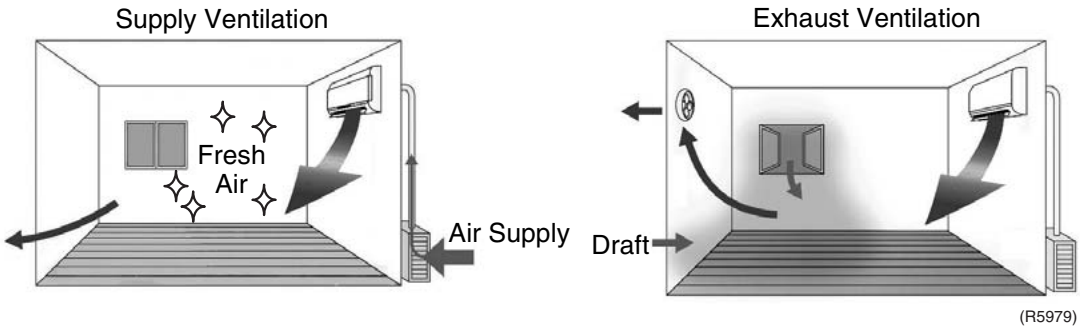


- Quiet because the ventilation fan is located in the outdoor unit
- Energy saving system due to low heat loss
- The room temperature changes little because no wind enters

- Operation noise is heard because the ventilation fan is located in the room.
- Electricity charges are high because heat loss is high.
- Draft enters easily to prevent comfortable temperature from being kept.

# 1.9 2-AREA INTELLIGENT EYE

The following functions can be performed by a human motion sensor (INTELLIGENT EYE).

1. Reduces the capacity when there is no human in the room in order to save electricity. (energy saving operation)
2. Divides the room into plural areas and detects existence of humans in each area. Shifts the airflow direction to the area having no human automatically to avoid direct airflow on humans.

**Processing**

**1. Detection method by INTELLIGENT EYE**

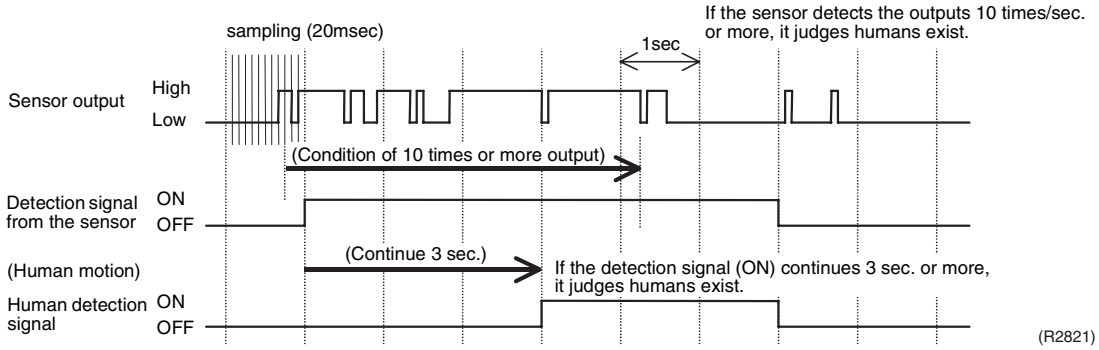


- This sensor detects human motion by receiving infrared rays and displays the pulse wave output.
- A microcomputer in an indoor unit carries out a sampling every 20 milliseconds and if it detects 10 cycles of the wave in 1.0 second in total (corresponding to 20 msec.× 10 = 200 msec.), and when the ON signal continues for 3 seconds, it judges that human is in the room as the motion signal is ON.
- INTELLIGENT EYE sensor is divided into 2 areas and detects humans in each area.

**■ Image of 2-AREA INTELLIGENT EYE**

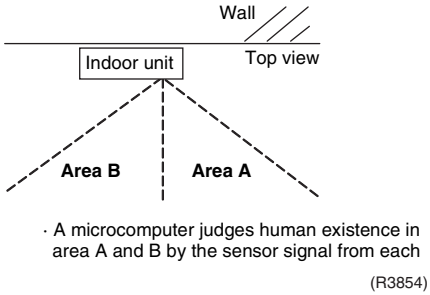

**2. The motions in energy saving operation (for example: in cooling)**

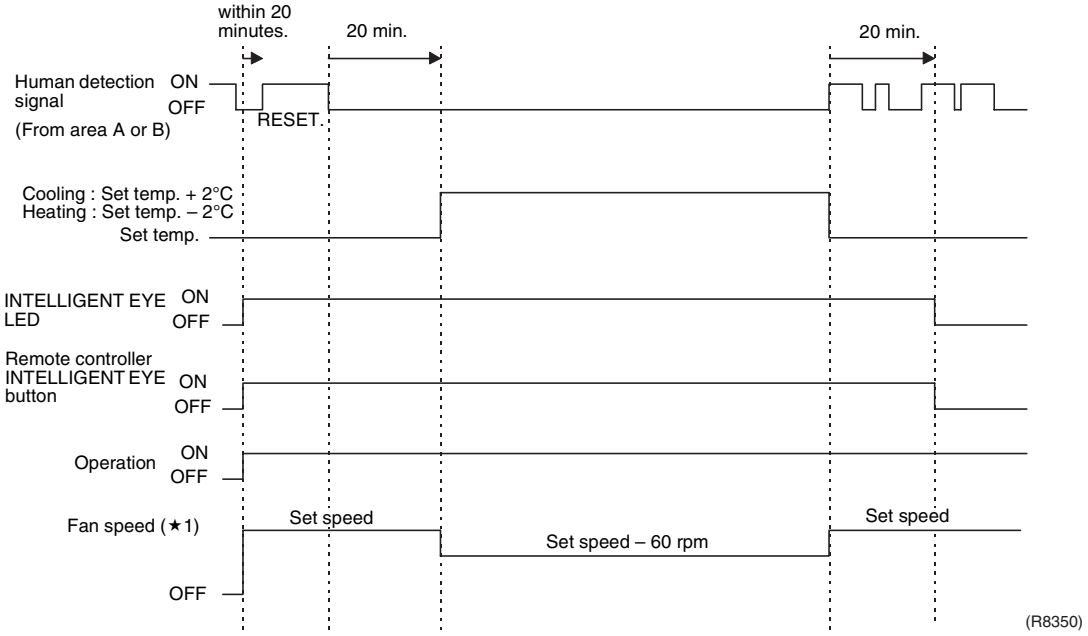


■ When a microcomputer does not have a signal from the sensor in 20 minutes, it judges that nobody is in the room and operates the unit in temperature shifted 2°C from the set temperature. (Cooling/Dry : 2°C higher, Heating : 2°C lower and AUTO : according to the operation mode at that time.)

★1 In case of FAN mode, the fan speed reduces by 60 rpm.

**3. Airflow direction in 2-AREA INTELLIGENT EYE operation**

■ Detection method: The opposite area of detected area is set as the target direction.

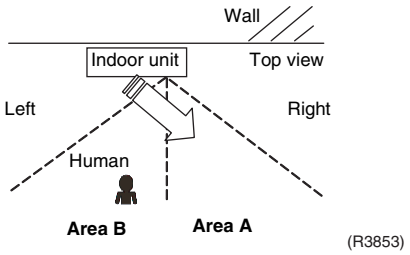


1. Detection signal ON in both area A and B: Shift the airflow direction to area B (left side)
2. Detection signal ON in area A: Shift the airflow direction to area B (left side)
3. Detection signal ON in area B: Shift the airflow direction to area A (right side)
4. Detection signal OFF in both area A and B: No change

* When the detection signal OFF in both area A and B, the unit starts energy saving operation.

**Others**

■ The dry operation can not command the setting temperature with a remote controller, but internally the set temperature is shifted by 1°C.

# 1.10 Inverter POWERFUL Operation

**Outline**

In order to exploit the cooling and heating capacity to full extent, operate the air conditioner by increasing the indoor fan rotating speed and the compressor frequency.

**Details of the Control**

When POWERFUL button is pushed in each operation mode, the fan speed and set temperature are converted to the following states in a period of 20 minutes.

| Operation mode | Fan speed | Remote controller set temperature |
|---|---|---|
| COOL | H tap + 50 rpm | 18°C |
| DRY | Dry rotating speed + 50 rpm | Normally targeted temperature in dry operation; Approx. –2°C |
| HEAT | H tap + 50 rpm | 30°C |
| FAN | H tap + 50 rpm | — |
| AUTO | Same as cooling / heating in POWERFUL operation | The target is kept unchanged |

Ex.) : POWERFUL operation in cooling mode.

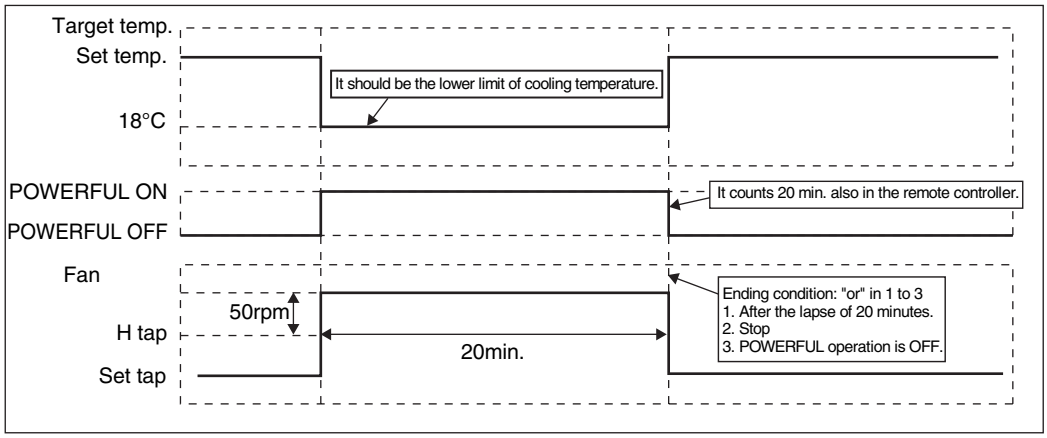


(R4606)

# 1.11 ECONO Mode

**Outline**

The "ECONO mode" reduces the maximum operating current and power consumption by approx. 30% during start up etc..
This mode is particularly convenient for energy-saving-oriented users. It is also a major bonus for those whose breaker capacities do not allow the use of multiple electrical devices and air conditioners.
It is easily activated from the wireless remote controller by pushing the ECONO button.

- When this function is ON, the maximum capacity is also down. (Approx. 20%)
- This function can only be set when the unit is running. Pressing the operation stop button causes the settings to be canceled.
- This function and POWERFUL operation cannot be used at the same time. The latest command has the priority.

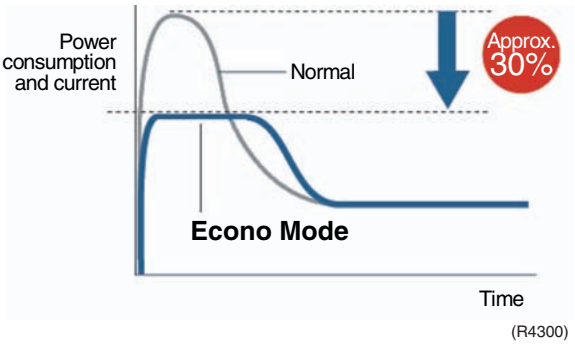


**Details**

- ECONO mode can be activated while the unit is running. The remote controller can send the ECONO command when the unit is in COOL, HEAT, DRY, or AUTO operation.
- When the ECONO command is valid, the input current is under reducing control. (Refer to "Input current control" on page 45.)

# 1.12 NIGHT SET Mode

When the OFF timer is set, the NIGHT SET circuit automatically activates.
The NIGHT SET circuit maintains the airflow setting made by users.

**The NIGHT SET Circuit**

The NIGHT SET circuit continues heating or cooling the room at the set temperature for the first one hour, then automatically raises the temperature setting slightly in the case of cooling, or lowers it slightly in the case of heating, for economical operations. This prevents excessive heating in winter and excessive cooling in summer to ensure comfortable sleeping conditions, and also conserves electricity.

**Cooling Operation**

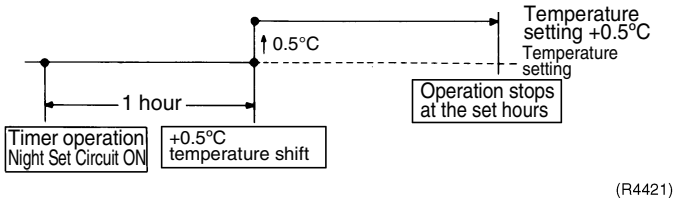


**Heating Operation**

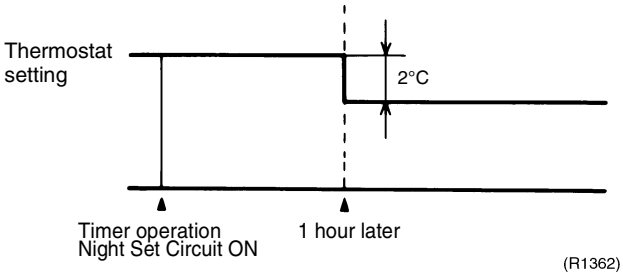

# 1.13 Other Functions

## 1.13.1 Multi-Colored Indicator Lamp

**Features**

Current operation mode is displayed in color of the lamp of the indoor unit which changes in 6 colors. Operating status can be monitored even in automatic operation in accordance with the content of actual operation.

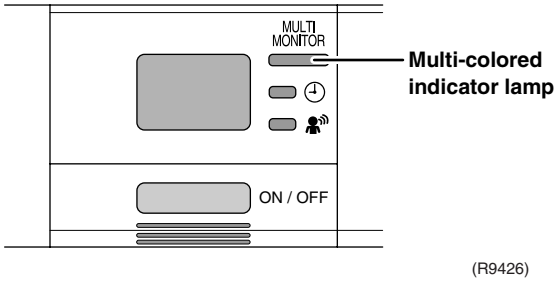


- The lamp color changes according to the operation.
  - Heating.....Red
  - HUMID HEAT.....Orange
  - Cooling.....Blue
  - DRY .....Green
  - FAN.....White
- The lamp color also changes according to the optional function.
  - FRESH AIR SUPPLY VENTILATION.....White
    (Only for the first 2 seconds during operation of the air conditioner.)
  - Standby state (ex. mode conflict).....Yellow

## 1.13.2 WEEKLY TIMER Operation

Up to 4 timer settings can be saved for each day of the week (up to 28 settings in total). Those 3 items of “ON / OFF”, “temperature” and “time” can be set.

Refer to “WEEKLY TIMER Operation” on page 95 for detail.

## 1.13.3 Hot Start Function

In order to prevent the cold air blast that normally comes when heating is started, the temperature of the heat exchanger of the indoor unit is detected, and either the airflow is stopped or is made very weak thereby carrying out comfortable heating of the room.
*The cold air blast is also prevented using a similar control when the defrosting operation is started or when the thermostat gets turned ON.

## 1.13.4 Signal Receiving Sign

When the indoor unit receives a signal from the remote controller, the unit emits a signal receiving sound.

## 1.13.5 ON/OFF Button on Indoor Unit

An ON/OFF button is provided on the front panel of the unit. Use this button when the remote controller is missing or if its battery has run out.
Every press of the button switches from ON to OFF or from OFF to ON.

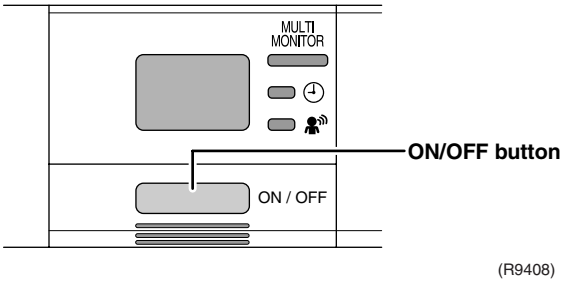


- Push this button once to start operation. Push once again to stop it.
- This button is useful when the remote controller is missing.
- The operation mode refers to the following table.

| | Mode | Temperature setting | Airflow rate |
|---|---|---|---|
| Heat Pump | AUTO | 25°C | AUTO |

- In the case of multi system operation, there are times when the unit does not activate with this button.

**<Forced operation mode>**
Forced operation mode can be set by pressing the ON/OFF button on the indoor unit for 5 to 9 seconds while the unit is not operating.
See page 53 for the detail of "Forced Operation Mode".

**Note:** When the ON/OFF button on the indoor unit is pressed for 10 seconds or more, the forced operation is stopped.

## 1.13.6 Titanium Apatite Photocatalytic Air-Purifying Filter

This filter combines the Air Purifying Filter and Titanium Apatite Photocatalytic Deodorizing Filter in a single highly effective unit. The filter traps microscopic particles, decompose odors and even deactivates bacteria and viruses. It lasts for 3 years without replacement if washed about once every 6 months.

## 1.13.7 Air Filter (Prefilter)

The air filter net is impregnated with a safe, odorless mold preventative to make the filter virtually immune to mold.

## 1.13.8 Auto-restart Function

Even if a power failure (including one for just a moment) occurs during the operation, the operation restarts in the condition before power failure automatically when power is restored.
(Note) It takes 3 minutes to restart the operation because the 3-minute standby function is activated.

# 1.14 Table for Special Modes

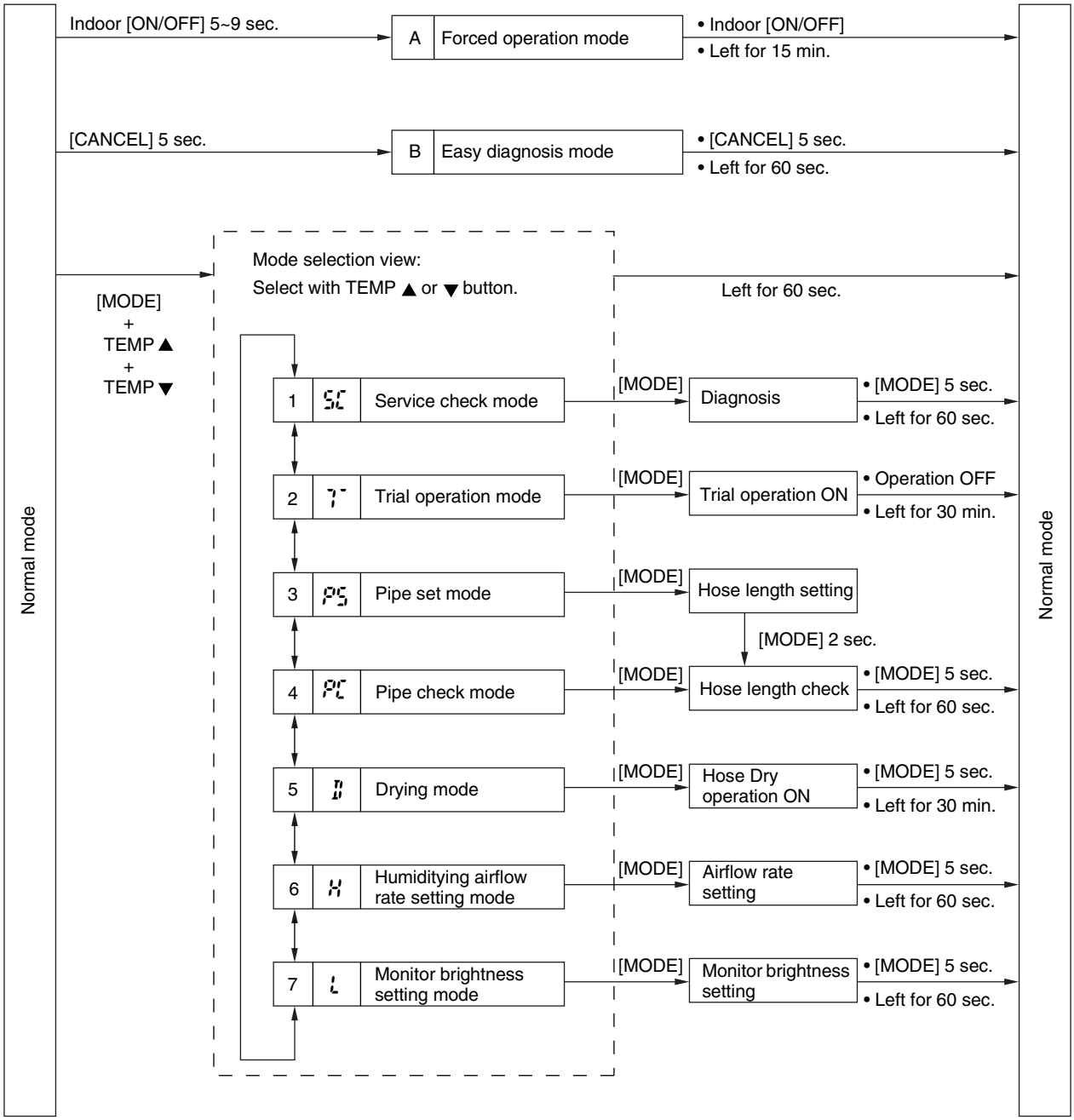


(R9416)

**A. Forced operation mode:**
The buzzer beeps, and the timer and multi-colored indicator lamp illuminate.
Refer to page 53 for detail.

**B. Easy diagnosis mode:**
You can identify the error code in a quite simple way but some of the error codes do not appear on the LCD.
Refer to the Check Method 1 on page 104 for detail.

**1. Service check mode:**
You can identify the error code for diagnosis.
Refer to the Check Method 2 on page 105 for detail.

**2. Trial operation mode:**

- You can select a mode for trial operation on the remote controller.
- The operation continues for approx. 30 minutes.

Refer to the installation manual on page 66 for detail.

**3. Pipe set mode:**

You can set the humidifying hose length and then check the preset value.
Refer to the installation manual on page 65 for detail.

**4. Pipe check mode:**

You can check the preset value of the humidifying hose length.
Refer to the installation manual on page 65 for detail.

**5. Drying mode:**

- Hose Dry operation is a forced drying operation for humidifying hose.
- The operation continues for approx. 30 minutes.
- Cooling, heating, or dry operation is not available during Hose Dry operation.

Refer to the installation manual on page 66 for detail.

**6. Humidifying airflow rate setting mode:**

Humidifying airflow rate setting mode allows to fine-tune the speed of the humidifying fan around ±10% relative to Automatic. Set high to increase the airflow rate, or set to low to decrease.

**7. Monitor brightness setting mode:**

The brightness of the multi-colored indicator lamp can be adjusted H (high), L (low), or OFF.

# 2. Function of Thermistor

## 2.1 Heat Pump Model

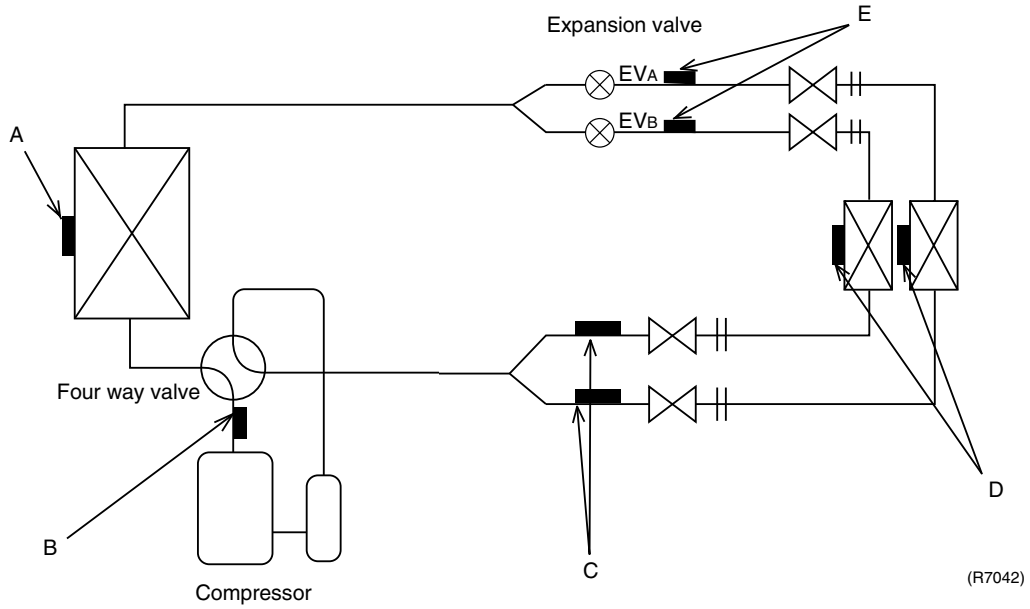


**A Outdoor Heat Exchanger Thermistor**

1. The outdoor heat exchanger thermistor is used for controlling target discharge pipe temperature.
   The system sets a target discharge pipe temperature according to the outdoor and indoor heat exchanger temperature, and controls the electronic expansion valve opening so that the target discharge pipe temperature can be obtained.
2. The outdoor heat exchanger thermistor is used for detecting disconnection of the discharge pipe thermistor when cooling.
   When the discharge pipe temperature becomes lower than the outdoor heat exchanger temperature, the discharge pipe thermistor is judged as disconnected.
3. The outdoor heat exchanger thermistor is used for high pressure protection during cooling operation.

**B Discharge Pipe Thermistor**

1. The discharge pipe thermistor is used for controlling temperature of the discharge pipe.
   If the temperature of discharge pipe (used in place of the inner temperature of the compressor) rises abnormally, the operating frequency drops or the operation halts.
2. The discharge pipe thermistor is used for detecting disconnection of the discharge pipe thermistor.

**C Gas Pipe Thermistor**

1. In cooling, the gas pipe thermistors are used for gas pipe isothermal control.
   The system controls electronic expansion valve opening so that gas pipe temperature in each room becomes equal.

**D Indoor Heat Exchanger Thermistor**

1. The indoor heat exchanger thermistors are used for controlling target discharge pipes temperature.
   The system sets a target discharge pipe temperature according to the outdoor and indoor heat exchanger temperature, and controls the electronic expansion valve opening so that the target discharge pipes temperature can be obtained.
2. The indoor heat exchanger thermistor is used to prevent freezing.
   During cooling operation, if the temperature drops abnormally, the operating frequency becomes lower, then the operation halts.
3. The indoor heat exchanger thermistor is used for anti-icing control.
   During cooling operation, if the heat exchanger temperature in the room where operation is halted becomes –1°C, or if the room temperature – heat exchanger temperature in the room where operation is halted becomes ≥10°C, it is assumed as icing.
4. The indoor heat exchanger thermistor is used for heating peak-cut control.
   During heating operation, if the temperature rises abnormally, the operating frequency becomes lower, then the operation halts.
5. The indoor heat exchanger thermistors are used for detecting disconnection of the discharge pipe thermistor when heating.
   When the discharge pipe temperature become lower than the maximum temperature of the indoor heat exchanger temperature, the discharge pipe thermistor is judged as disconnected.
   The indoor heat exchanger thermistors are also used for preventing abnormal high pressure.
6. When only one indoor unit is operating, the indoor heat exchanger thermistor is used for supercooling control.
   The actual supercool is calculated from the liquid pipe temperature and the heat exchanger temperature. The system controls the electronic expansion valve opening to reach the target supercool.

**E Liquid Pipe Thermistor**

1. When only one indoor unit is heating, the indoor liquid pipe thermistor is used for a supercooling control.
   The system calculates the actual supercool with the liquid pipe temperature and the maximum heat exchanger temperature between rooms, and controls the opening of the electronic expansion valve to reach the target supercool.
2. When all indoor units are heating, the liquid pipe thermistor is used for liquid pipes isothermal control.
   The system controls electronic expansion valve opening so that liquid pipe temperature in each room becomes equal.

# 3. Control Specification

## 3.1 Mode Hierarchy

**Outline**

There are two modes; the mode selected in user's place (normal air conditioning mode) and forced operation mode for installation and providing service.

**Detail**

There are following modes; stop, cooling (includes drying), heating (include defrosting)

- Air conditioner control mode
  - Forced operating mode
    - Forced cooling (for Pump Down Operation)
  - Normal operating mode
    - Cooling
    - Heating
    - Defrosting
    - Stop mode (except for cooling/heating modes by indoor command)
      - Preheat operation
      - During C (capacitor) is discharging
      - Stop

(R2829)

**Note:** Unless specified otherwise, an indoor dry operation command must be regarded as cooling operation.

**Decision of the operation mode**

In this multi system, when both 2 indoor units are operating, one of them may enter the standby mode by the following conditions.

- The units in the 2 rooms are different in operation mode
- The indoor units in both 2 rooms are set to HUMID HEAT operation or FRESH AIR SUPPLY VENTILATION

Refer to the following pages for detail.
"Note for multi" on page 100.
"HUMID HEAT operation" on page 86.
"FRESH AIR SUPPLY VENTILATION" on page 88.

# 3.2 Automatic switching for HUMID HEAT operation room

**Outline**

When the indoor units in both 2 rooms are set to HUMID HEAT operation, priority is given to the indoor unit starting operation first basically.
However, priority is given to the indoor unit starting operation subsequently under certain conditions.

**Detail**

1. When the indoor units in both 2 rooms are set to HUMID HEAT operation, priority is given to the indoor unit starting operation first (Unit 1), and the indoor unit goes into humidifying operation while the indoor unit starting operation subsequently (Unit 2) goes into standby mode.

2. When the humidity of the Unit 1 reaches a target level, the unit which performs HUMID HEAT operation switches from Unit 1 to Unit 2 automatically.

3. When the temperature decreases in the room of the Unit 1, the Unit 2 goes into standby mode, then, the Unit 1 starts HUMID HEAT operation again.

Carry out priority room setting to prevent the room of HUMID HEAT operation from switching automatically.

**How to carry out priority room setting**

Cut the jumper of the outdoor unit PCB.

Cut the JP9 → Room-A is set as the priority room.
Cut the JP10 → Room-B is set as the priority room.

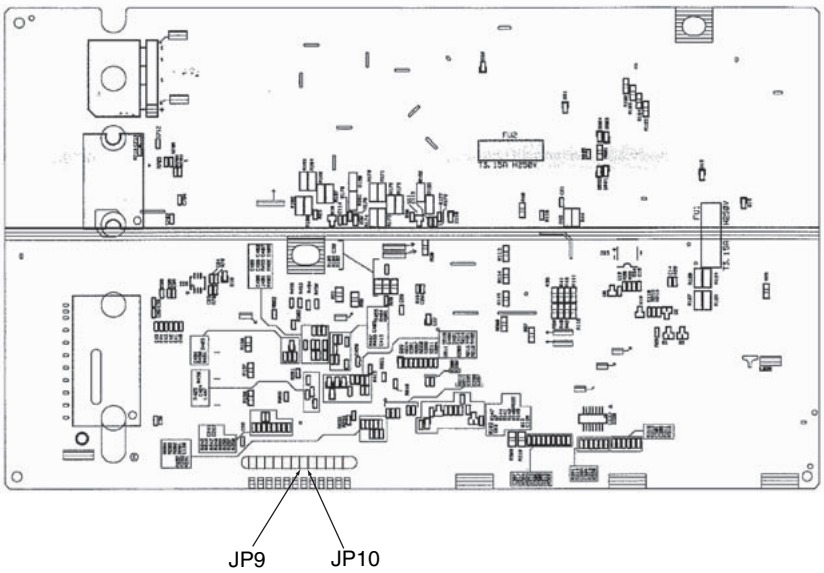


(R9428)

# 3.3 Frequency Control

**Outline**

Frequency that corresponds to each room's capacity is determined according to the difference in the temperature of each room and the temperature that is set by the remote controller.
The function is explained as follows.

1. How to determine frequency.
2. Frequency command from an indoor unit. (The difference between a room temperature and the temperature set by the remote controller.)
3. Frequency command from an indoor unit. (The ranked capacity of the operating room).
4. Frequency initial setting.
5. PI control.

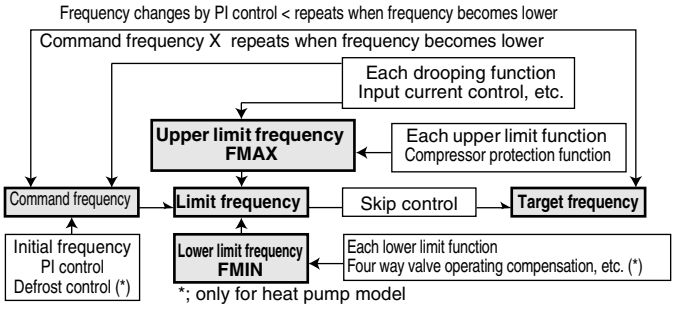


(R1375)

**Detail**

**How to Determine Frequency**

The compressor frequency is determined by taking the following steps.

**For Heat Pump Model**

**1. Determine command frequency**

- Command frequency is determined in the following order of priority.

1.1 Limiting defrost control time
1.2 Forced cooling
1.3 Indoor frequency command

**2. Determine upper limit frequency**

- Set a minimum value as an upper limit frequency among the frequency upper limits of the following functions:
  Compressor protection, input current, discharge pipe temperature, low Hz high pressure limit, heating peak-cut, freeze-up protection, defrost.

**3. Determine lower limit frequency**

- Set a maximum value as an lower limit frequency among the frequency lower limits of the following functions:
  Four way valve operation compensation, draft prevention, pressure difference upkeep.

**4. Determine prohibited frequency**

- There is a certain prohibited frequency such as a power supply frequency.

**Indoor Frequency Command (ΔD signal)**

The difference between a room temperature and the temperature set by the remote controller is taken as the "ΔD signal" and is used for frequency command.

| Temperature difference | ΔD signal | Temperature difference | ΔD signal | Temperature difference | ΔD signal | Temperature difference | ΔD signal |
|---|---|---|---|---|---|---|---|
| 0 | ∗Th OFF | 2.0 | 4 | 4.0 | 8 | 6.0 | C |
| 0.5 | 1 | 2.5 | 5 | 4.5 | 9 | 6.5 | D |
| 1.0 | 2 | 3.0 | 6 | 5.0 | A | 7.0 | E |
| 1.5 | 3 | 3.5 | 7 | 5.5 | B | 7.5 | F |

Values depend on the type of indoor unit.

∗Th OFF = Thermostat OFF

**Indoor Unit Capacity (S value)**

The capacity of the indoor unit is a "S" value and is used for frequency command.

ex.)

| Capacity | S value |
|---|---|
| 2.5 kW | 25 |
| 3.5 kW | 35 |

**Frequency Initial Setting**

**< Outline >**

When starting the compressor, or when conditions are varied due to the change of the operating room, the frequency must be initialized according to the total of a maximum ΔD value of each room and a total value of Q (ΣQ) of the operating room (the room in which the thermostat is set to ON).

Q value: Indoor unit output determined from indoor unit volume, airflow rate and other factors.

**PI Control (Determine Frequency Up/Down by ΔD Signal)**

1. **P control**
   Calculate a total of the ΔD value in each sampling time (20 seconds), and adjust the frequency according to its difference from the frequency previously calculated.

2. **I control**
   If the operating frequency is not change more than a certain fixed time, adjust the frequency up and down according to the ΣΔD value.
   When the ΣΔD value is small...lower the frequency.
   When the ΣΔD value is large...increase the frequency.

3. **Limit of frequency variation width**
   When the difference between input current and input current drooping value is less than 1 A, the frequency increase width must be limited.

4. **Frequency management when other controls are functioning**

- When each frequency is drooping;
  Frequency management is carried out only when the frequency droops.
- For limiting lower limit
  Frequency management is carried out only when the frequency rises.

5. **Upper and lower limit of frequency by PI control**
   The frequency upper and lower limits are set depending on the total of S values of operating room. When low noise commands come from the indoor unit more than one room or when outdoor unit low noise or quiet commands come from all the rooms, the upper limit frequency must be lowered than the usual setting.

# 3.4 Controls at Mode Changing / Start-up

## 3.4.1 Preheating Operation

**Outline**

Operate the inverter in the open phase operation with the conditions including the preheating command from the indoor, the outdoor air temperature and discharge pipe temperature.

**Detail**

**Preheating ON Condition**

- When outdoor air temperature is below 10.5ºC and discharge pipe temperature is below 10.5ºC, inverter in open phase operation starts. (The power consumption of compressor during preheating operation is 35 W.)

**OFF Condition**

- When outdoor air temperature is higher than 12ºC or discharge pipe temperature is higher than 12ºC, inverter in open phase operation stops.

## 3.4.2 Four Way Valve Switching

**Outline**

During the heating operation current must be conducted and during cooling and defrosting current must not be conducted. In order to eliminate the switching sound (as the four way valve coil switches from ON to OFF) when the heating is stopped, the delay switch of the four way valve must be carried out after the operation stopped.

**Detail**

The OFF delay of four way valve
Energize the coil for 150 seconds after unit operation is stopped.

## 3.4.3 Four Way Valve Operation Compensation

**Outline**

At the beginning of the operation as the four way valve is switched, acquire the differential pressure required for activating the four way valve by having output frequency which is more than a certain fixed frequency, for a certain fixed time.

**Detail**

**Staring Conditions**

1. When starting compressor for heating.
2. When the operating mode changes from the previous time.
3. When starting compressor for starting defrosting or resetting.
4. When starting compressor for the first time after the reset with the power is ON.
5. When starting compressor after operation stop by the cooling / heating mode change-over malfunction.

Set the lower limit frequency to $\mathbb{A}$ Hz for 60 seconds with any conditions with 1 through 5 above.

| | | 40 class | 50 class |
|---|---|---|---|
| $\mathbb{A}$ | Cooling | 56Hz | 40Hz |
| | Heating | 68Hz | 54Hz |

## 3.4.4 3-Minute Standby

Prohibit to turn ON the compressor for 3 minutes after turning it off.
(Except when defrosting. )

### 3.4.5 Compressor Protection Function

When turning the compressor from OFF to ON, the upper limit of frequency must be set as follows. (The function must not be used when defrosting.)

| | 40 class | 50 class |
|---|---|---|
| FCG 1 | 62 | 55 |
| FCG 2 | 72 | 70 |
| FCG 3 | 90 | 85 |
| TCG 1 | 140 | 150 |
| TCG 2 | 180 | 180 |
| TCG 3 | 300 | 300 |

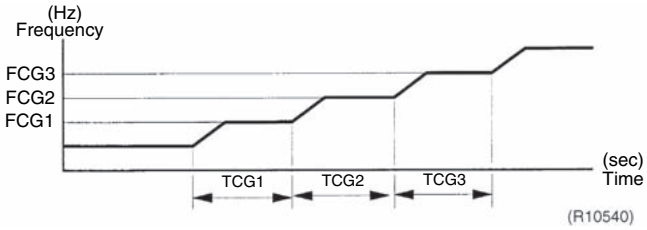


## 3.5 Discharge Pipe Temperature Control

**Outline**

The discharge pipe temperature is used as the compressor's internal temperature. If the discharge pipe temperature rises above a certain level, the operating frequency upper limit is set to keep this temperature from going up further.

**Detail**

**Divide the Zone**

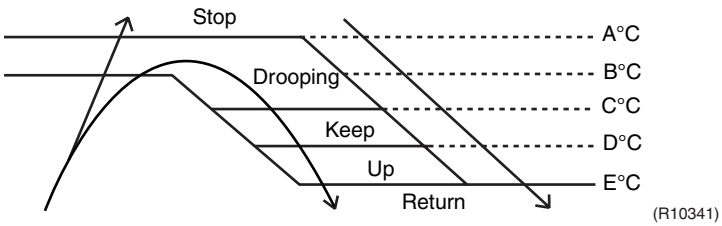


| | 40 class | 50 class |
|---|---|---|
| A | 110 | 110 |
| B | 103 | 103 |
| C | 102 | 102 |
| D | 101 | 100 |
| E | 97 | 95 |

**Management within the Zones**

| Zone | Control contents |
|---|---|
| Stop zone | When the temperature reaches the stop zone, stop the compressor and correct abnormality. |
| Drooping zone | Start the timer, and the frequency is drooping. |
| Keep zone | Keep the upper limit of frequency. |
| Return / Reset zone | Cancel the upper limit of frequency. |

# 3.6 Input Current Control

**Outline**

Detect an input current by the CT during the compressor is running, and set the frequency upper limit from such input current.
In case of heat pump model, this control is the upper limit control function of the frequency which takes priority of the lower limit of four way valve activating compensation.

**Detail**

The frequency control is made within the following zones.

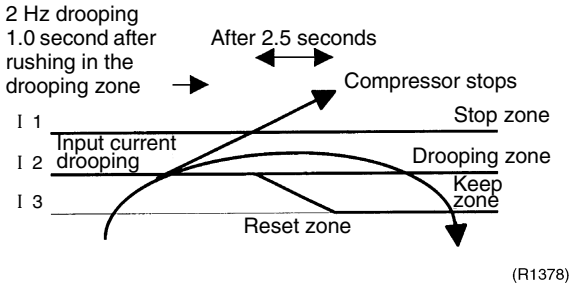


When a “stop current” continues for 2.5 seconds after rushing on the stop zone, the compressor operation stops.
If a “drooping current” is continues for 1.0 second after rushing on the drooping zone, the frequency is 2 Hz drooping.
Repeating the above drooping continues until the current rushes on the drooping zone without change.
In the keep zone, the frequency limit remains.
In the return / reset zone, the frequency limit is cancelled.

**Limitation of current drooping and stop value according to the outdoor air temperature**

1. In case the operation mode is cooling
- The current droops when outdoor air temperature becomes higher than a certain level (model by model).
2. In case the operation mode is heating
- The current droops when outdoor air temperature becomes higher than a certain level (model by model).

# 3.7 Freeze-up Protection Control

**Outline**

During cooling operation, the signals being sent from the indoor unit allow the operating frequency limitation and then prevent freezing of the indoor heat exchanger. (The signal from the indoor unit must be divided into the zones as the followings.

**Detail**

**Conditions for Start Controlling**

Judge the controlling start with the indoor heat exchanger temperature after 2 seconds from operation start and after 30 seconds from changing number of operation room.

**Control in Each Zone**

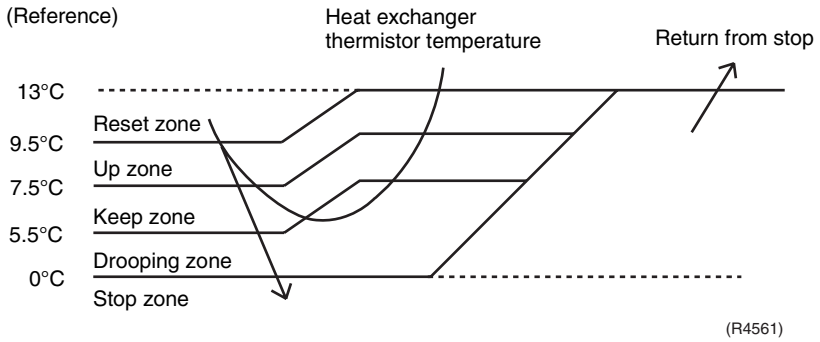

# 3.8 Heating Peak-cut Control

**Outline**

During heating operation, the signals being sent from the indoor unit allow the operating frequency limitation and prevent abnormal high pressure. (The signal from the indoor unit must be divided as follows.)

**Detail**

**Conditions for Start Controlling**

Judge the controlling start with the indoor heat exchanger temperature after 2 minutes from operation start and 𝔸 seconds from changing number of operation room.

**Control in Each Zone**

The maximum value of heat exchange intermediate temperature of each indoor unit controls the following (excluding stopped rooms).

| | 𝔸 |
|---|---|
| When increase | 30 |
| When decrease | 2 |

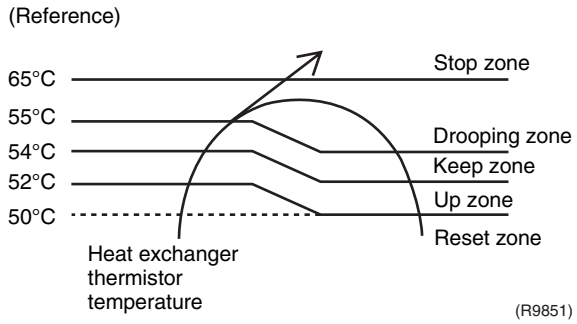


# 3.9 Fan Control

**Outline**

Fan control is carried out according to the following conditions.

1. Fan ON control for electric component cooling fan
2. Fan control when defrosting
3. Fan OFF delay when stopped
4. ON/OFF control when cooling operation
5. Fan control when the number of heating rooms decreases
6. Fan control when forced operation
7. Fan control in indoor / outdoor unit quiet operation
8. Fan control during heating operation
9. Fan control in the POWERFUL mode
10. Fan control for pressure difference upkeep

**Detail**

**Fan OFF Control when Stopped**

- Fan OFF delay for 60 seconds must be made when the compressor is stopped.

**Tap Control in Indoor / Outdoor Unit Quiet Operation**

1. When Cooling Operation
   When the outdoor air temperature is higher than 37°C, the fan tap must be set to H.
   When the outdoor air temperature is 18 to 37°C, the fan tap must be set to M.
   When the outdoor air temperature is lower than 18°C, the fan tap must be set to L.
2. When Heating Operation
   When the outdoor air temperature is lower than 4°C, the fan tap must be set to H.
   When the outdoor air temperature is 4 to 12°C, the fan tap must be set to M.
   When the outdoor air temperature is higher than 12°C, the fan tap must be set to L.

# 3.10 Liquid Compression Protection Function 2

**Outline**

In order to obtain the dependability of the compressor, the compressor must be stopped according to the conditions of the temperature of the outdoor air and outdoor heat exchanger.

**Detail**

■ Operation stops depending on the outdoor air temperature.
Compressor operation turns OFF under the conditions that the system is in cooling operation and outdoor air temperature is below 10°C.

# 3.11 Defrost Control

**Outline**

Defrosting is carried out by the cooling cycle (reverse cycle). The defrosting time or outdoor heat exchanger temperature must be more than its fixed value when finishing.

**Detail**

**Conditions for Starting Defrost**
The starting conditions must be made with the outdoor air temperature and heat exchanger temperature. Under the conditions that the system is in heating operation, 6 minutes after the compressor is started and more than 30 minutes of accumulated fine pass since the start of the operation or ending the defrosting.
**Conditions for Canceling Defrost**
The judgment must be made with heat exchanger temperature. (40 class : 4°C~12°C, 50 class : 4°C~15°C)

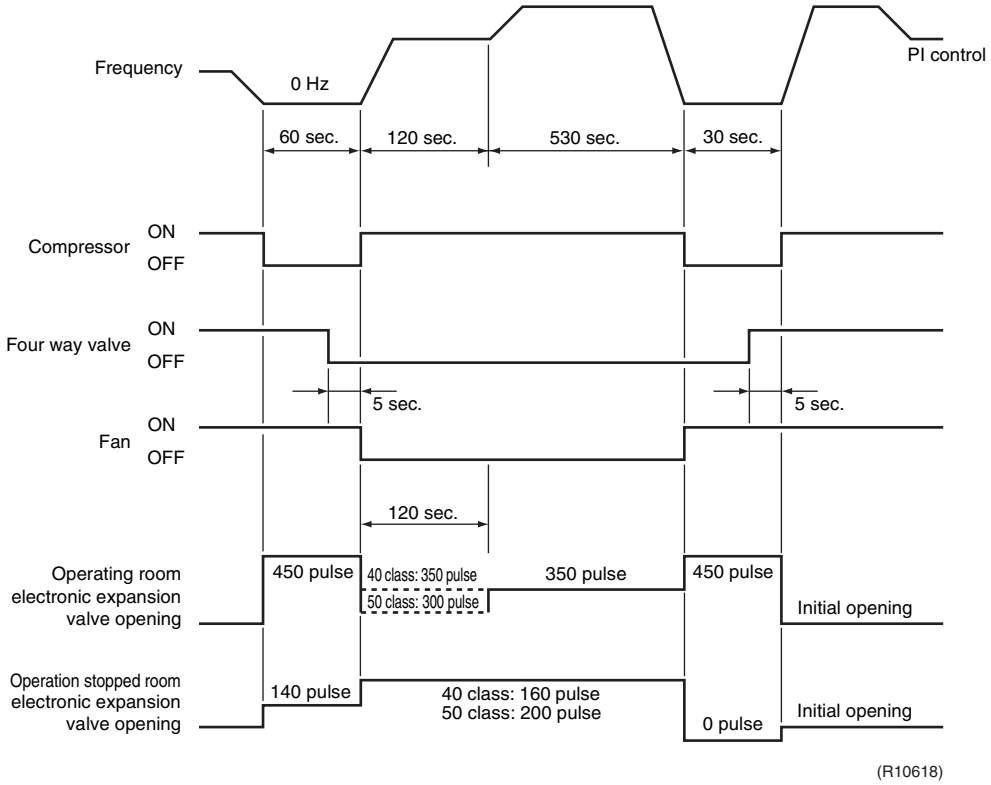

# 3.12 Electronic Expansion Valve Control

**Outline**

The following items are included in the electronic expansion valve control.

**Electronic expansion valve is fully closed**

1. Electronic expansion valve is fully closed when turning on the power.
2. Pressure equalizing control

**Room Distribution Control**

1. Gas pipe isothermal control
   Liquid pipe temperature control (with all ports connected and all rooms being air-conditioned)
2. SC (supercooling) control

**Open Control**

1. Electronic expansion valve control when starting operation
2. Electronic expansion valve control when frequency changed
3. Electronic expansion valve control for defrosting
4. Electronic expansion valve control for oil recovery
5. Electronic expansion valve control when a discharge pipe temperature is abnormally high
6. Electronic expansion valve control when the discharge pipe thermistor is disconnected
7. Electronic expansion valve control for indoor unit freeze-up protection

**Feedback Control**

1. Discharge pipe temperature control

**Detail**

The followings are the examples of control which function in each mode by the electronic expansion valve control.

| Operation pattern | ○ : function<br>× : not function | Gas pipe isothermal control | SC (supercooling) control | Control when frequency changed | Control for abnormally high discharge pipe temperature | Oil recovery control | Indoor freeze prevention control | Liquid pipe temperature control | Dew buildup prevention control for indoor rotor |
|---|---|---|---|---|---|---|---|---|---|
| When power is turned ON | | | | | | | | | |
| | Fully closed when power is turned ON | × | × | × | × | × | × | × | × |
| Cooling, 1 room operation | | | | | | | | | |
| | Open control when starting | × | × | × | ○ | × | ○ | × | ○ |
| | (Control of target discharge pipe temperature) | × | × | ○ | ○ | ○ | ○ | × | ○ |
| Cooling, 2 rooms operation | | | | | | | | | |
| | Control when the operating room is changed | × | × | × | ○ | × | ○ | × | ○ |
| | (Control of target discharge pipe temperature) | ○ | × | ○ | ○ | × | ○ | × | ○ |
| Stop | | | | | | | | | |
| | Pressure equalizing control | × | × | × | × | × | × | × | × |
| Heating, 1 room operation | | | | | | | | | |
| | Open control when starting | × | × | × | ○ | × | × | × | × |
| | (Control of target discharge pipe temperature) | × | ○ | ○ | ○ | × | × | × | × |
| Heating, 2 rooms operation | | | | | | | | | |
| | Control when the operating room is changed | × | × | × | ○ | × | × | × | × |
| | (Control of target discharge pipe temperature) | × | × | ○ | ○ | × | × | ○ | × |
| | (Defrost control FD=1) | × | × | × | × | × | × | × | × |
| Stop | | | | | | | | | |
| | Pressure equalizing control | × | × | × | × | × | × | × | × |
| Heating, 1 room operation | | | | | | | | | |
| | Open control when starting | × | × | × | ○ | × | × | × | × |
| Control of discharge pipe thermistor disconnection | Continue | × | ○ | ○ | × | × | × | ○ | × |
| Stop | Pressure equalizing control | × | × | × | × | × | × | × | × |

(R9427)

## 3.12.1 Fully Closing with Power On

Initialize the electronic expansion valve when turning on the power, set the opening position and develop pressure equalizing.

## 3.12.2 Pressure Equalization Control

When the compressor is stopped, open and close the electronic expansion valve and develop pressure equalization.

## 3.12.3 Opening Limit

**Outline**

Limit a maximum and minimum opening of the electronic expansion valve in the operating room.

**Detail**

- A maximum electronic expansion valve opening in the operating room : 450 pulses
- A minimum electronic expansion valve opening in the operating room : 60 pulses

The electronic expansion valve is fully closed in the room where cooling is stopped and is opened with fixed opening during defrosting.

## 3.12.4 Gas Pipe Isothermal Control During Cooling

When the units are operating in multiple rooms, detect the gas pipe temperature and adjust the electronic expansion valve opening so that the temperature of the gas pipe in each room becomes the same value.

- When the gas pipe temperature > the average gas pipe temperature → open the electronic expansion valve in that room
- When the gas pipe temperature < the average gas pipe temperature → close the electronic expansion valve in that room

## 3.12.5 SC (supercooling) Control

**Outline**

Detect the temperature of liquid pipe and heat exchanger of the rooms and compensate the electronic expansion valve opening so that the SC of each room becomes the target SC.

- When the actual SC is > target SC, open the electronic expansion valve of the room.
- When the actual SC is < target SC, close the electronic expansion valve of the room.

**Detail**

**Start Functioning Conditions**

After finishing the open control (630 seconds after the beginning of the operation), control all the electronic expansion valve in the operating room.

**Determine Electronic Expansion Valve Opening**

Adjust the electronic expansion valve so that the temperature difference between the maximum heat exchanger temperature of connected room and the temperature of liquid pipe thermistor becomes constant.

## 3.12.6 Starting Operation / Changing Operating Room Control

Control the electronic expansion valve opening when the system is starting or the operating room is changed, and prevent the system to be super heated or moistened.

## 3.12.7 Disconnection of the Discharge Pipe Thermistor

**Outline**

Detect a disconnected discharge pipe thermistor by comparing the discharge pipe temperature with the condensation temperature. If the discharge pipe thermistor is disconnected, open the electronic expansion valve according to the outdoor air temperature and the operating frequency, and operate for a specified time, and then stop.

After 3 minutes of waiting, restart the unit and check if the discharge pipe thermistor is disconnected. If the discharge pipe thermistor is disconnected stop the system after operating for a specified time. If the disconnection is detected 5 times in succession, then the system is shut down.

**Detail**

**Detect Disconnection**

If a 720-second timer for open control becomes over, the following adjustment must be made.

1. When the operation mode is cooling
   When the discharge pipe temperature is lower than the outdoor heat exchanger temperature, the discharge pipe thermistor disconnection must be ascertained.
2. When the operation mode is heating
   When the discharge pipe temperature is lower than the max temperature of operating room heat exchanger, the discharge pipe thermistor disconnection must be ascertained.

When the condition of the above 1 or 2 is decided, the system stops after operating for continuous 9 minutes.

**Adjustment when the thermistor is disconnected**

When compressor stop repeats specified time, the system should be down.

## 3.12.8 Control when frequency is changed

When the target discharge pipe temperature control is active, if the target frequency is changed for a specified value in a certain time period, cancel the target discharge pipe temperature control and change the target opening of the electronic expansion valve according to the shift.

## 3.12.9 High Discharge Pipe Temperature

When the compressor is operating, if the discharge pipe temperature exceeds a certain value, open the electronic expansion valve and run the refrigerant to the low pressure side and lower discharge pipe temperature.

## 3.12.10 Oil Recovery Function

**Outline**

The electronic expansion valve opening in the cooling stopped room must be set as to open for a certain time at a specified interval so that the oil in the cooling stopped room may not be accumulated.

**Detail**

During cooling operation, every 1 hour continuous operation, the electronic expansion valves in the operation stopped room must be opened by 80 pulses for specified time.

## 3.12.11 Target Discharge Pipe Temperature Control

Obtain the target discharge pipe temperature from the indoor and outdoor heat exchanger temperature, and adjust the electronic expansion valve opening so that the actual discharge pipe temperature become close to that temperature. (Indirect SH (superheating) control using the discharge pipe temperature)

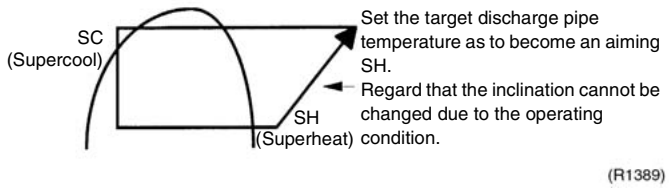


The electronic expansion valve opening and the target discharge pipe temperature are adjusted every 20 seconds. The target discharge pipe temperature is controlled by indoor heat exchanger temperature and outdoor heat exchanger temperature. The opening degree of the electronic expansion valve is controlled by followings.

- The target discharge pipe temperature
- The actual discharge pipe temperature
- The previous discharge pipe temperature

# 3.13 Malfunctions

## 3.13.1 Sensor Malfunction Detection

Sensor malfunction may occur either in the thermistor or current transformer (CT) system.

**Relating to Thermistor Malfunction**

1. Outdoor heat exchanger thermistor
2. Discharge pipe thermistor
3. Fin thermistor
4. Gas pipe thermistor
5. Outdoor air thermistor
6. Liquid pipe thermistor

**Relating to CT Malfunction**

When the output frequency is more than 52 Hz and the input current is less than 1.25A, carry out abnormal adjustment.

## 3.13.2 Detection of Overload and Overcurrent

**Outline**

In order to protect the inverter, detect an excessive output current, and for protecting compressor, monitor the OL operation.

**Detail**

- **If the OL (compressor head) temperature exceeds 120~130°C (depending on the model), the compressor gets interrupted.**
- **If the inverter current exceeds 22 A, the system shuts down the compressor.**

## 3.13.3 Refrigerant Shortage Control

**Outline**

If a power consumption is below the specified value in which the frequency is higher than the specified frequency, it must be regarded as refrigerant shortage.
In addition to such conventional function, if the discharge pipe temperature is higher than the target discharge pipe temperature, and the electronic expansion valve is fully open more than the specified time, it is considered as an refrigerant shortage.

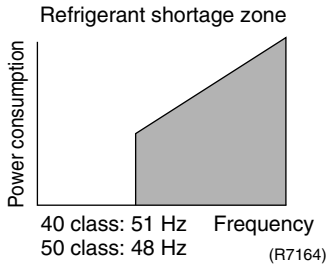


With the conventional function, a power consumption is weak comparing with that in the normal operation when refrigerant is insufficient, and refrigerant shortage is detected by checking a power consumption.

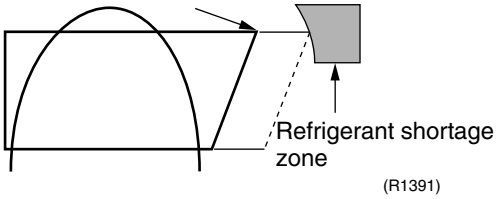


When operating with refrigerant shortage, although the rise of discharge pipe temperature is great and the electronic expansion valve is open, it is presumed as refrigerant shortage if the discharge pipe temperature is higher than the target discharge pipe temperature.

Refer to “Refrigerant Shortage” on page 154 for detail.

**Detail**

**Judgment by Input Current**
When an output frequency is exceeds 51 Hz (40 class) or 48 Hz (50 class) and the input current is less than specified value, the adjustment is made for refrigerant shortage.
**Judgment by Discharge Pipe Temperature**
When discharge pipe temperature is higher than certain value and the electronic expansion value opening is 450 pulse (max.), the adjustment is made for refrigerant shortage.

### 3.13.4 Preventing Indoor Freezing

During cooling, if the heat exchanger temperature in the operation stopped room becomes below the specified temperature for the specified time, open the electronic expansion valve in the operation stopped room as specified, and carry out the fully closed operation. After this, if freezing abnormality occurs more than specified time, the system shall be down as the system abnormality.

## 3.14 Forced Operation Mode

**Outline**

Forced operation mode includes only forced cooling.

**Detail**

**Forced Cooling**

| Item | Forced Cooling |
|---|---|
| Forced operation allowing conditions | 1) The indoor unit is not abnormal, but the indoor unit which is not in the freezing prohibiting zone is present in more than 1 room. |
| | 2) The outdoor unit is not abnormal and not in the 3-minute standby mode. |
| | The forced operation is allowed when the above “and” conditions are met. |
| Starting/adjustment | When the indoor unit on/off button is pressed for continuous 5 second as the above conditions are met. |
| 1) Determine operating room | All rooms must operate. |
| 2) Command frequency | 70Hz (40 class), 47Hz (50 class) |
| 3) Electronic expansion valve opening | It depends on the capacity of the operating indoor unit. |
| 4) Outdoor unit adjustment | Compressor is in operation. |
| 5) Indoor unit adjustment | The command of forced cooling operation is transmitted to all indoor units. |
| End | 1) When the indoor units on/off button (of the unit which sent the command) is pressed again. |
| | 2) The operation is to end automatically after 15 min. |
| Others | The protect functions are prior to all others in the forced operation. |

## 3.15 Additional Function

### 3.15.1 POWERFUL Operation Mode

Compressor operating frequency and outdoor unit airflow rate are increased.

### 3.15.2 Voltage Detection Function

Power supply voltage is detected each time equipment operation starts.

# Part 5
# Installation / Operation Manual

1. Installation Manual .....55
   1.1 Indoor Units .....55
   1.2 Outdoor Units .....67
2. System Configuration .....79
3. Operation Manual .....80
   3.1 Names of Parts .....80
   3.2 AUTO · DRY · COOL · HEAT · FAN Operation .....82
   3.3 Adjusting the Airflow Direction .....84
   3.4 HUMID HEAT Operation .....86
   3.5 FRESH AIR SUPPLY VENTILATION .....88
   3.6 COMFORT AIRFLOW and INTELLIGENT EYE Operation .....89
   3.7 POWERFUL and OUTDOOR UNIT QUIET Operation .....91
   3.8 ECONO Operation .....92
   3.9 TIMER Operation .....93
   3.10 WEEKLY TIMER Operation .....95
   3.11 Note for Multi System .....100

# 1. Installation Manual

## 1.1 Indoor Units

# Indoor Unit Installation Drawings

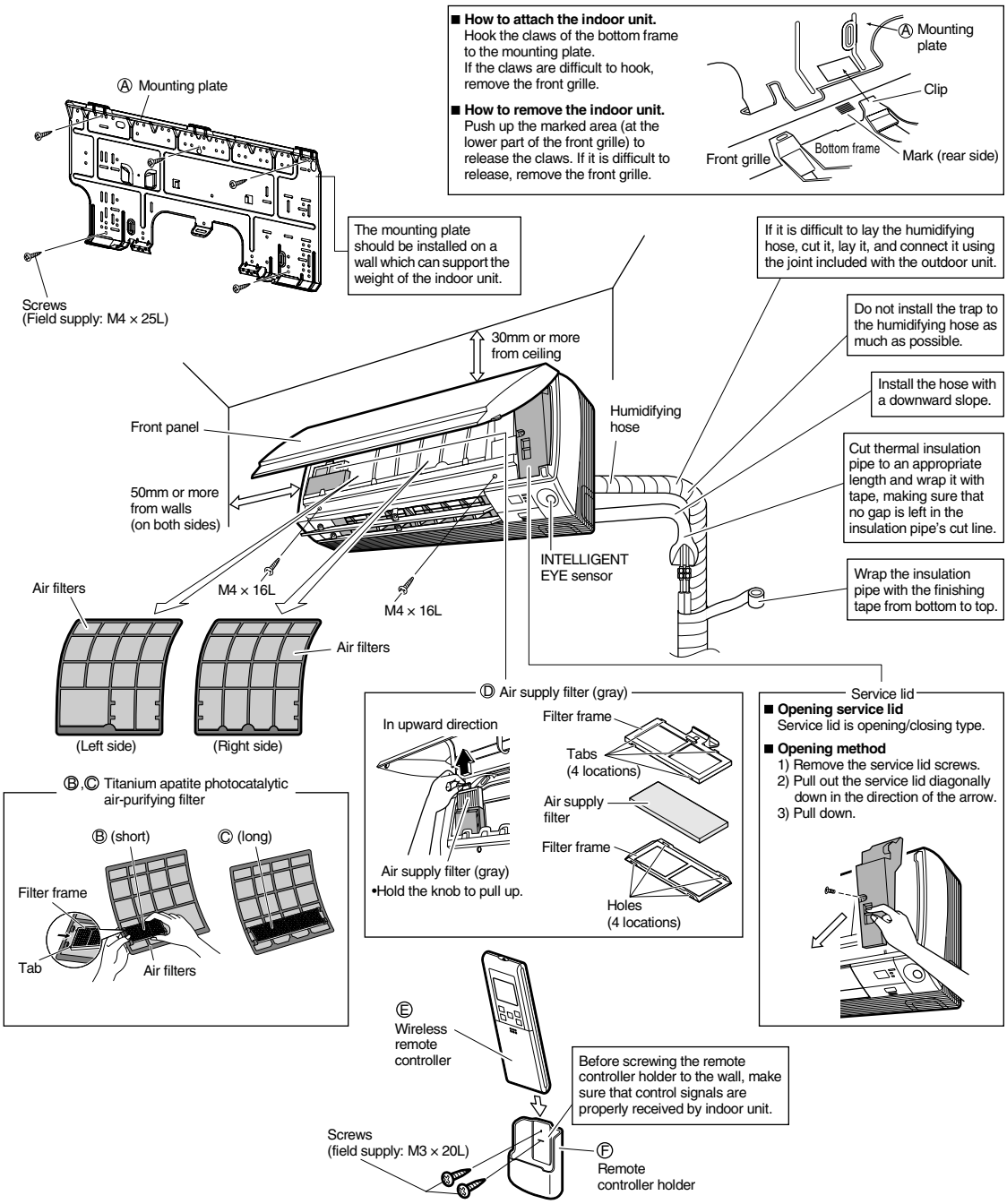


### INTELLIGENT EYE sensor

**⚠ CAUTION**

1) Do not hit or violently push the INTELLIGENT EYE sensor. This can lead to damage and malfunction.
2) Do not place large objects near the sensor. Also keep heating units or humidifiers outside the sensor's detection area.

3

# Preparation before Installation

## 1. Removing and installing front panel.

**• Removal method**

Hook fingers on the tabs on the left and right of the main body, and open until the panel stops. Slide the front panel sideways to disengage the rotating shaft. Then pull the front panel toward you to remove it.

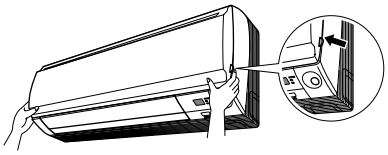

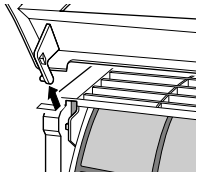

**• Installation method**

Align the tabs of the front panel with the grooves, and push all the way in. Then close slowly. Push the center of the lower surface of the panel firmly to engage the tabs.

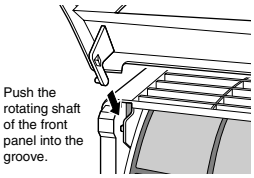


## 2. Removing and installing front grille.

**• Removal method**

1) Remove front panel to remove the air filter.
2) Remove 2 screws from the front grille.
3) In front of the ○○○ mark of the front grille, there are 3 upper hooks. Lightly pull the front grille toward you with one hand, and push down on the hooks with the fingers of your other hand.

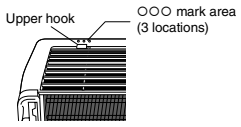


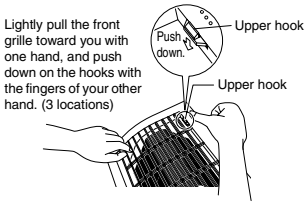


## When there is no work space because the unit is close to ceiling

⚠ **CAUTION**

Be sure to wear protection gloves.

Place both hands under the center of the front grille, and while pushing up, pull it toward you.

**• Installation method**

1) Install the front grille and firmly engage the upper hooks (3 locations).
2) Install 2screws of the front grille.
3) Install the air filter and then mount the front panel.

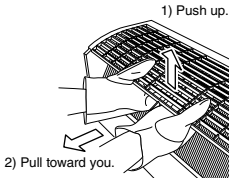

# Preparation before Installation

## 3. How to set the different addresses.

When 2 indoor units are installed in 1 room, the 2 wireless remote controllers can be set for different addresses.

1) Remove the metal plate electrical wiring cover. (Refer to the **Removal/attachment methods of metal plate electrical wiring covers.**)
2) Cut the address jumper (JA) on the printed circuit board.
3) Cut the address jumper (J4) in the remote controller.

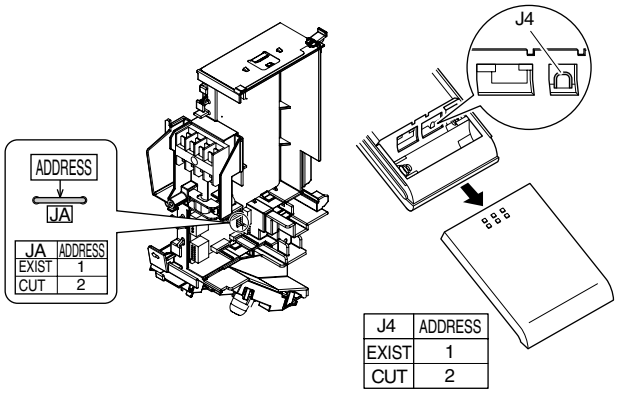


## 4. When connecting to an HA system. (Wired remote controller, central remote controller etc.)

1) Remove the metal plate electrical wiring cover. (Refer to the **Removal/attachment methods of metal plate electrical wiring covers.**)
2) Attach the connection cord to the S21 connector and pull the harness out through the notched part in the figure.
3) Replace the electrical wiring cover as it was, and pull the harness around, as shown in the figure.

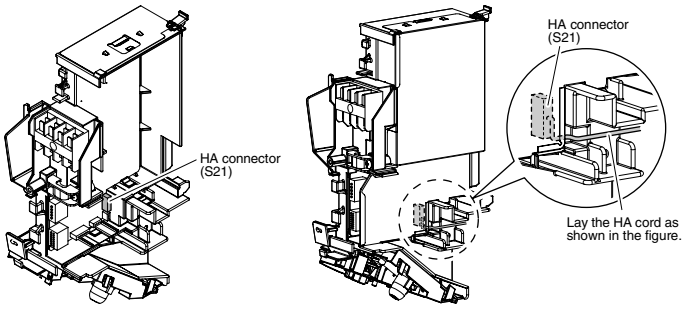


**• Removal methods of metal plate electrical wiring covers**

1) Remove the front grille.
2) Remove the electrical wiring box. (1 screw)
3) Raise the 2 upper parts of the metal plate electrical wiring cover, pull the parts frontward, and remove the 3 tabs.
4) Slide the metal plate electrical wiring cover upward and remove the 2 tabs on the lower side.

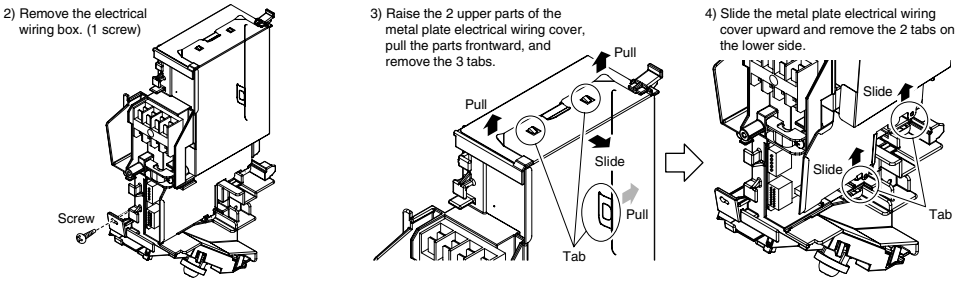


5

- **Attachment methods of metal plate electrical wiring covers**

Attach the metal plate electrical wiring covers as shown below.

1) Lean the metal plate electrical wiring cover as shown in the figure and attach tab (1) on the lower side to the electrical wiring box.
2) Attach tab (2) on the lower side of the metal plate electrical wiring cover.

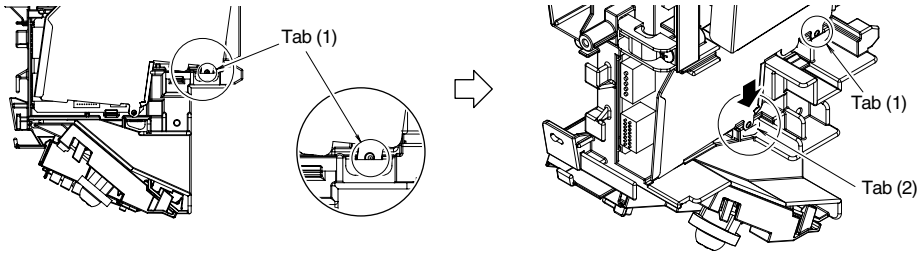


3) Push in the upper part of the metal plate electrical wiring cover and attach the 3 tabs.

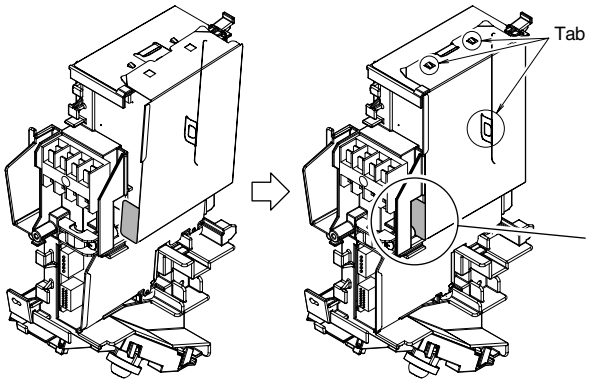


**⚠ CAUTION**

Make sure that the shaded part ( ▭ ) will not go inside the electrical wiring box.

# Refrigerant Piping Work

**With a multi indoor unit , install as described in the installation manual supplied with the multi outdoor unit.**

## 1. Flaring the pipe end.

1) Cut the pipe end with a pipe cutter.
2) Remove burrs with the cut surface facing downward so that the chips do not enter the pipe.
3) Put the flare nut on the pipe.
4) Flare the pipe.
5) Check that the flaring is properly made.

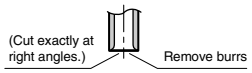


Flaring

Set exactly at the position shown below.

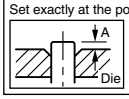


| | Flare tool for R410A | Conventional flare tool | |
|---|---|---|---|
| | Clutch-type | Clutch-type (Rigid-type) | Wing-nut type (Imperial-type) |
| A | 0-0.5mm | 1.0-1.5mm | 1.5-2.0mm |

Check

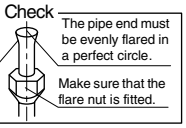


**⚠ WARNING**

1) Do not use mineral oil on flared part.
2) Prevent mineral oil from getting into the system as this would reduce the lifetime of the units.
3) Never use piping which has been used for previous installations. Only use parts which are delivered with the unit.
4) Do never install a drier to this R410A unit in order to guarantee its lifetime.
5) The drying material may dissolve and damage the system.
6) Incomplete flaring may cause refrigerant gas leakage.

6

# Refrigerant Piping Work

## 2. Refrigerant piping.

**⚠ CAUTION**

1) Use the flare nut fixed to the main unit. (To prevent cracking of the flare nut by aged deterioration.)
2) To prevent gas leakage, apply refrigeration oil only to the inner surface of the flare. (Use refrigeration oil for R410A.)
3) Use torque wrenches when tightening the flare nuts to prevent damage to the flare nuts and gas leakage.

Align the centres of both flares and tighten the flare nuts 3 or 4 turns by hand. Then tighten them fully with the torque wrenches.

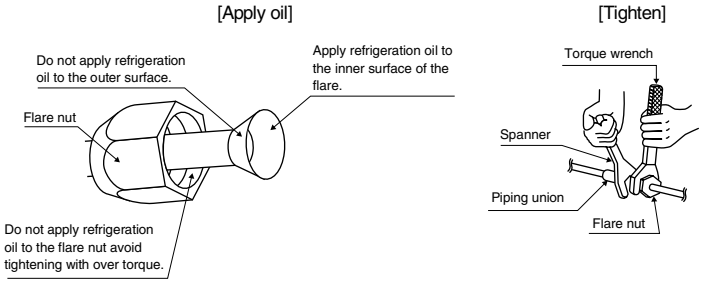


| Flare nut tightening torque | | |
|---|---|---|
| Gas side | | Liquid side |
| 25/35/42 class | 50 class | |
| 3/8 inch | 1/2 inch | 1/4 inch |
| 32.7-39.9N • m (330-407kgf • cm) | 49.5-60.3N • m (505-615kgf • cm) | 14.2-17.2N • m (144-175kgf • cm) |

### 2-1.Caution on piping handling.

1) Protect the open end of the pipe against dust and moisture.
2) All pipe bends should be as gentle as possible. Use a pipe bender for bending.

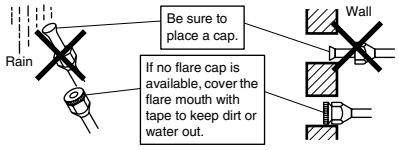


### 2-2. Selection of copper and heat insulation materials.

• When using commercial copper pipes and fittings, observe the following:

1) Insulation material: Polyethylene foam
   Heat transfer rate: 0.041 to 0.052W/mK (0.035 to 0.045kcal/(mh•°C))
   Refrigerant gas pipe's surface temperature reaches 110°C max.
   Choose heat insulation materials that will withstand this temperature.

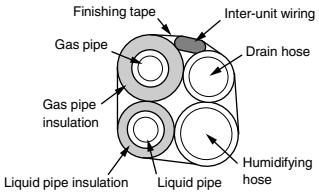


2) Be sure to insulate both the gas and liquid piping and to provide insulation dimensions as below.

| Gas side | | Liquid side | Gas pipe thermal insulation | | Liquid pipe thermal insulation |
|---|---|---|---|---|---|
| 25/35/42 class | 50 class | | 25/35/42 class | 50 class | |
| O.D. 9.5mm | O.D. 12.7mm | O.D. 6.4mm | I.D. 12-15mm | I.D. 14-16mm | I.D. 8-10mm |
| Minimum bend radius | | | Thickness 10mm Min. | | |
| 30mm or more | 40mm or more | 30mm or more | | | |
| Thickness 0.8mm (C1220T-O) | | | | | |

3) Use separate thermal insulation pipes for gas and liquid refrigerant pipes.

7

# Indoor Unit Installation

## 1. Installing the mounting plate.

- The mounting plate should be installed on a wall which can support the weight of the indoor unit.
  1) Temporarily secure the mounting plate to the wall, make sure that the panel is completely level, and mark the boring points on the wall.
  2) Secure the mounting plate to the wall with screws.

**Recommended mounting plate retention spots and dimensions**

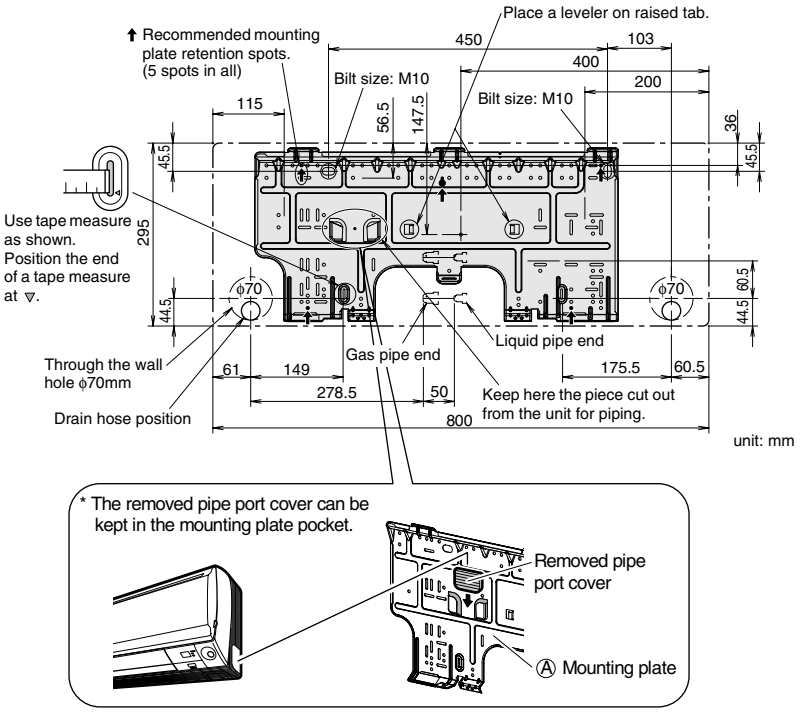


## 2. Boring a wall hole and installing wall embedded pipe.

- For walls containing metal frame or metal board, be sure to use a wall embedded pipe and wall cover in the feed-through hole to prevent possible heat, electrical shock, or fire.
- Be sure to caulk the gaps around the pipes with caulking material to prevent water leakage.
  1) Bore a feed-through hole of 70mm in the wall so it has a down slope toward the outside.
  2) Insert a wall pipe into the hole.
  3) Insert a wall cover into wall pipe.
  4) After completing refrigerant piping, wiring, and drain piping, caulk pipe hole gap with putty.

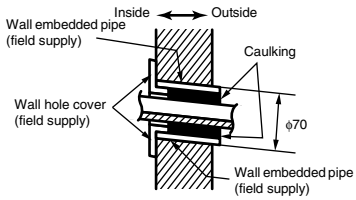


8

# Indoor Unit Installation

## 3. Inter-unit wiring.

1) Open the front panel, then remove the service lid.
2) Pass the inter-unit wiring from the outdoor unit through the feed-through wall hole and then through the back of the indoor unit. Pull them through the front side. Bend the ends of tie wires upward for easier work in advance. (If the inter-unit wiring ends are to be stripped first, bundle wire ends with adhesive tape.)
3) Press the bottom frame of the indoor unit with both hands to set it on the mounting plate hooks. Make sure the wires do not catch on the edge of the indoor unit.

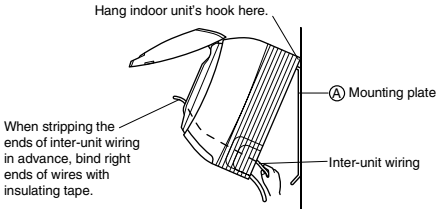


## 4. Humidifying hose installation work.

**⚠ CAUTION**

- Be sure to use humidifying hose sold as optional accessory. (KPMH996A10S (10m set), KPMH996A15S (15m set))
  1) The length of the humidifying hose needs to be set to ensure humidifying capacity. Cut off any excess hose. Use the remote controller to set the hose length. (Refer to page 13.)
- Attach a cover to the end of each humidifying hose so that no moisture or foreign substance will go into the hose when leaving the hose without being connected to the outdoor and indoor units.
- When laying the humidifying hose inside the wall, block the ends of the humidifying hose with tape or the like to prevent water or anything else from entering it until it is connected to the indoor unit and outdoor unit ducts.
- Do not bend the humidifying hose more than 90°.
- Use caution not to deform the cuff while installing the humidifying hose.

### 4-1. Connecting to the indoor unit.

- Connect the cuff side of the humidifying hose to the indoor unit duct.
- Use the humidifying hose of suitable length as shown below.
  10m set: the 8m hose
  15m set: the 2m hose
- When connecting the humidifying hoses of the indoor and outdoor units, refer to the installation manual provided to the outdoor unit.

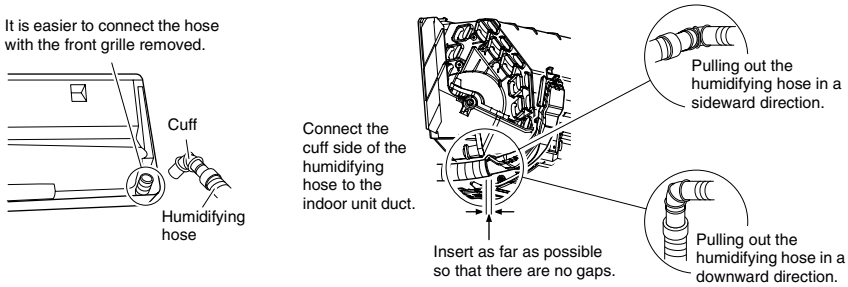


- **Left-back piping**

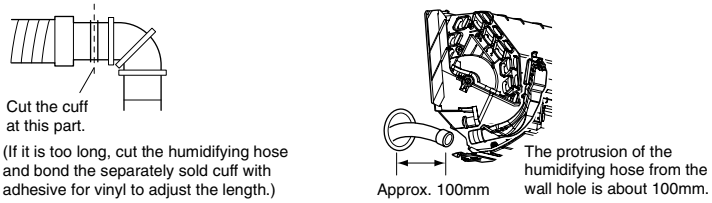


9

## 5. Laying piping, hoses, and wiring.

- Connect the humidifying hose to the indoor unit duct. See **4. Humidifying hose installation work** for details.
- Lay the piping, drain hose and humidifying hose according to the orientation of the piping coming out of the unit, as shown below.
- Make sure the drain hose is sloped downward.
- Wrap the piping, drain hose and humidifying hose together using insulation tape.

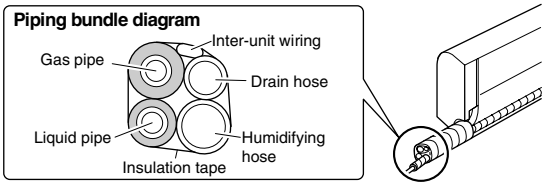


### 5-1. Right-side, right-back, or right-bottom piping.

**• Right-side piping** **• Right-back piping** **• Right-bottom piping**

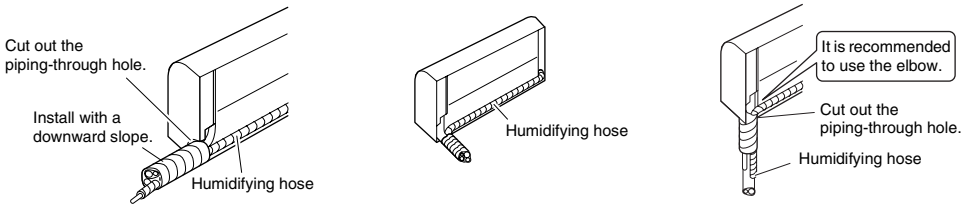


1) Wrap the pipes, hoses and inter-unit wiring using insulation tape as shown in the piping bundle diagram.
2) Put all the pipes through the through-hole in the wall and hook the indoor unit onto the Ⓐ mounting plate.
3) Connect the pipes.

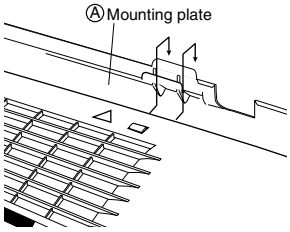


### 5-2. Left-side, left-back, or left-bottom piping.

## How to replace the drain plug and drain hose.

**• Replacing onto the left side**

1) Remove the insulation fixing screws on the right to remove the drain hose.
2) Remove the drain plug on the left side and attach it to the right side.
3) Insert the drain hose and tighten with the screws which were removed at STEP 1).

**Drain hose attachment position**
* The drain hose is on the back of the unit.

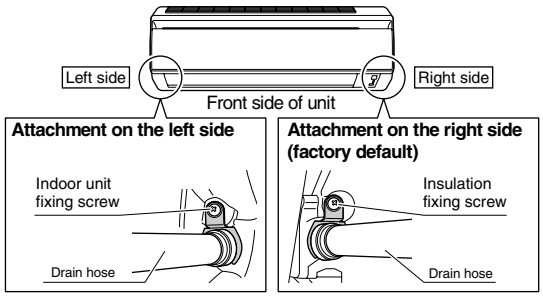


**How to set drain plug**

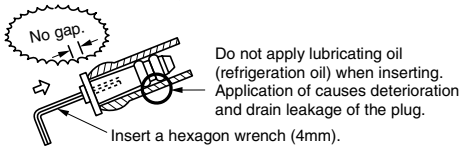


10

# Indoor Unit Installation

• **Left-side piping**

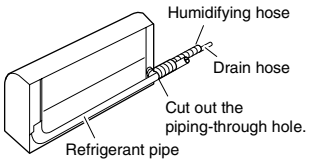


• **Left-back piping**

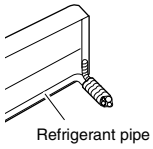


• **Left-bottom piping**

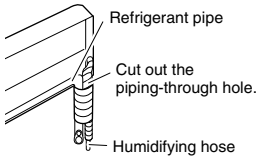


1) Replace the drain plug and drain hose. **(How to replace the drain plug and drain hose.)**
2) Pull in the refrigerant piping and lay it so that it matches the liquid and gas piping marked on the Ⓐ mounting plate.
3) Hook the indoor unit onto the Ⓐ mounting plate.
4) Connect the pipes. If it is difficult to do, remove the front grille first.
5) Wrap the insulation on the piping with insulation tape. If you are not replacing the drain hose, store it in the location shown as right figure.

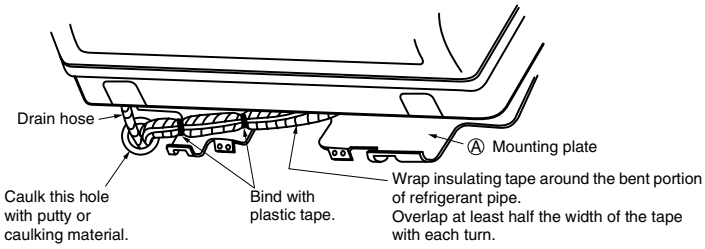


6) While exercising care so that the inter-unit wiring do not catch indoor unit, press the bottom edge of indoor unit with both hands until it is firmly caught by the mounting plate hooks. Secure indoor unit to the mounting plate with screws (M4 × 12L).

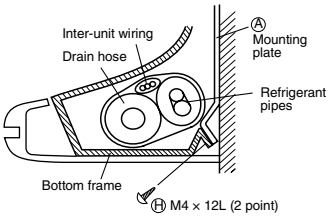


## 5-3.Wall embedded piping.

Follow the instructions given under **Left-side, left-back, or left-bottom piping** .

1) Insert the drain hose to this depth so it won't be pulled out of the drain pipe.

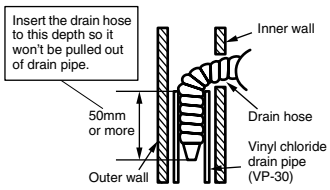


11

## 6. Wiring.

**With a multi indoor unit, install as described in the installation manual supplied with the multi outdoor unit.**

1) Strip wire ends (15mm).
2) Match wire colours with terminal numbers on indoor and outdoor unit's terminal blocks and firmly screw wires to the corresponding terminals.
3) Connect the earth wires to the corresponding terminals.
4) Pull wires to make sure that they are securely latched up, then retain wires with wire retainer.
5) In case of connecting to an adapter system. Run the remote controller cable and attach the S21.
6) Shape the wires so that the service lid fits securely, then close service lid.

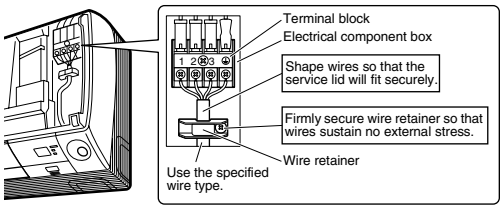


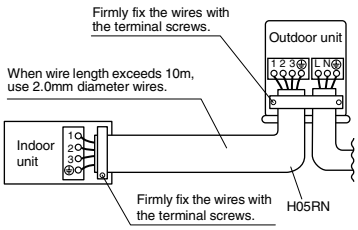


### ⚠ WARNING

1) Do not use tapped wires, strand wires, extensioncords, or starburst connections, as they may cause overheating, electrical shock, or fire.
2) Do not use locally purchased electrical parts inside the product. (Do not branch the power for the drain pump, etc., from the terminal block.) Doing so may cause electric shock or fire.

## 7. Drain piping.

1) Connect the drain hose, as described right.

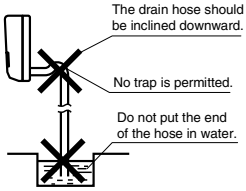


2) Remove the air filters and pour some water into the drain pan to check the water flows smoothly.

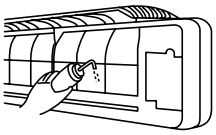

3) When drain hose requires extension, obtain an extension hose commercially available. Be sure to thermally insulate the indoor section of the extension hose.

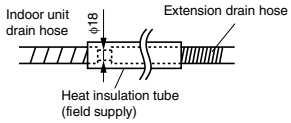


4) When connecting a rigid polyvinyl chloride pipe (nominal diameter 13mm) directly to the drain hose attached to the indoor unit as with embedded piping work, use any commercially available drain socket (nominal diameter 13mm) as a joint.

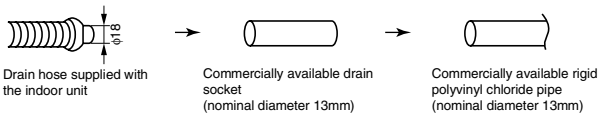


12

# Setting the Humidifying Hose Length

**⚠ CAUTION**

If the humidifying hose length is not set or it is set incorrectly, the humidifying capacity may diminish or strange sound may occur from humidifying hose.

## 1. Setting the humidifying hose length.

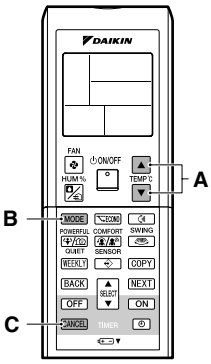


**A**: TEMP button
**B**: MODE selector button
**C**: CANCEL button

Set the humidifying hose length to ensure humidifying capacity. Use the remote controller to set the humidifying hose length. When doing this, power on the unit as communication is established between the unit and the remote controller. Be sure to direct the remote controller toward the indoor unit while setting the humidifying hose length.
(The humidifying hose length includes the rear of the indoor unit.)

- Set the humidifying hose length according the following procedure after check the installed hose length.

### Pipe set mode (Hose length setting)

1) Press “MODE” button and “TEMP” button (2 locations) at the same time.
(To cancel, do not operate the button for 60 seconds. The display will return to normal.)

2) Press “TEMP ▲▼ ” button and select “ PS ” (Pipe set mode).

3) Press “MODE” button to activate the Pipe set mode.
(When the unit receive signal, the sound emitted. Be sure to check the sound. If the sound is not heard, press “MODE” button again.)

4) Pressing “TEMP ▲▼ ” button changes the humidifying hose length.
You may set the hose length to 6 levels:

“ ~ 3.0 ”, “ ~ 3.1 4.0 ”, “ ~ 4.1 6.0 ”, “ ~ 6.1 8.0 ”, “ ~ 8.1 10.0 ”, “ ~ 10.0 ”.

5) Hold “MODE” button for more than 2 seconds.
The display changes to “ PC ” (Pipe check mode).

### Pipe set mode (Hose length check)

6) Press “MODE” button again to activate the pipe check mode.

7) Press “TEMP ▲▼ ” button and select the hose length.
Beep sound indicate that the setting of the remote controller accords or disaccord with the unit.
- accord: a long beep
- disaccord: a short beep

If you set the wrong humidifying hose length, press “CANCEL” button.
The display returns to step 4). Reset the hose length.

8) Hold “MODE” button for more than 5 seconds.
The humidifying hose length setting is complete and the display returns to normal.

LCD

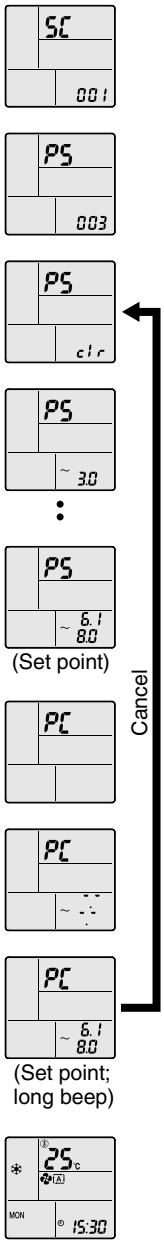


## 2. When the unit cannot be powered on.

When setting the humidifying hose length without powering on the unit, the indoor unit does not receive the information at step 3) and 5) shown above. However, the remote controller stores the humidifying hose length information.
(When the customer uses the unit, the humidifying hose length information is send to the indoor unit to be set.)

13

# Trial Operation and Testing

## 1. Trial operation and testing.

1-1 Measure the supply voltage and make sure that it falls in the specified range.

1-2 Trial operation should be carried out in either cooling or heating mode.

- In cooling mode, select the lowest programmable temperature; in heating mode, select the highest programmable temperature.
  1) Trial operation may be disabled in either mode depending on the room temperature.
     Use the remote controller for trial operation as described below.
  2) After trial operation is complete, set the temperature to a normal level (26°C to 28°C in cooling mode, 20°C to 24°C in heating mode).
  3) For protection, the system disables restart operation for 3 minutes after it is turned off.

1-3 To perform a test run for HUMID HEAT operation, activate test run mode from the remote controller following the instructions below and select the HUMID HEAT operation.

1-4 Carry out the test operation in accordance with the operation manual to ensure that all functions and parts, such as louver movement, are working properly.
- The air conditioner requires a small amount of power in its standby mode. If the system is not to be used for some time after installation, shut off the circuit breaker to eliminate unnecessary power consumption.
- If the circuit breaker trips to shut off the power to the air conditioner, the system will restore the original operation mode when the circuit breaker is opened again.

### Trial operation from remote controller

1) Press “ON/OFF” button to turn on the system.
2) Press “TEMP” button (2 locations) and “MODE” button at the same time.
3) Press “TEMP ▲▼ ” button and select “ T ” (TEST mode).
4) Press “MODE” button.
5) Trial run mode terminates in approx. 30 minutes and switches into normal mode. To quit a trial operation, press “ON/OFF” button.

## 2. Test items.

| Test items | Symptom (diagnostic display on RC) | Check |
|---|---|---|
| Indoor and outdoor units are installed properly on solid bases. | Fall, vibration, noise | |
| No refrigerant gas leaks. | Incomplete cooling/heating function | |
| Refrigerant gas and liquid pipes and indoor drain hose extension are thermally insulated. | Water leakage | |
| Draining line is properly installed. | Water leakage | |
| System is properly earthed. | Electrical leakage | |
| The specified wires are used for inter-unit wiring connections. | Inoperative or burn damage | |
| Indoor or outdoor unit’s air intake or exhaust has clear path of air. Stop valves are opened. | Incomplete cooling/heating function | |
| Indoor unit properly receives remote controller commands. | Inoperative | |
| No strange noise from the humidifying hose. | Bubble sound* | |

* When the bubble sound is heard, water may be in the humidifying hose.
Do the HOSE DRY operation.

### HOSE DRY operation for humidifying hose

1) Press “TEMP” button (2 locations) and “MODE” button at the same time.
2) Press “TEMP ▲▼ ” button and select “ D ” (DRYING mode).
3) Press “MODE” button to start the HOSE DRY operation.
   HOSE DRY operation will work about 30 minutes.
   (To cancel the HOSE DRY operation, hold “MODE” button for more than 5 seconds.)
4) Activate test run for HUMID HEAT operation again, check that the bubble sound is not heard from the humidifying hose.

## 1.2 Outdoor Units

# Outdoor Unit Installation Drawings

### 1. Precautions for humidifying hose installation work.

- Moisture on the outdoor unit is brought to the indoor unit together with air around the outdoor unit during humidifying operation. Install the outdoor unit in a clean and calm location.
- Be sure to use the humidifying hose sold as an optional accessory. (KPMH996A10S (10m set), KPMH996A15S (15m set))

**⚠ CAUTION**

Do not connect the embedded branch piping and the outdoor unit when only carrying out piping work without connecting the indoor unit in order to add another indoor unit later.
Make sure no dirt or moisture gets into either side of the embedded branch piping.
See "**Precautions for Laying Refrigerant Piping**" on page 9 for details.

■ Installation of humidifying hoses, respectively, in upward direction in ROOM A and in downward direction in ROOM B.

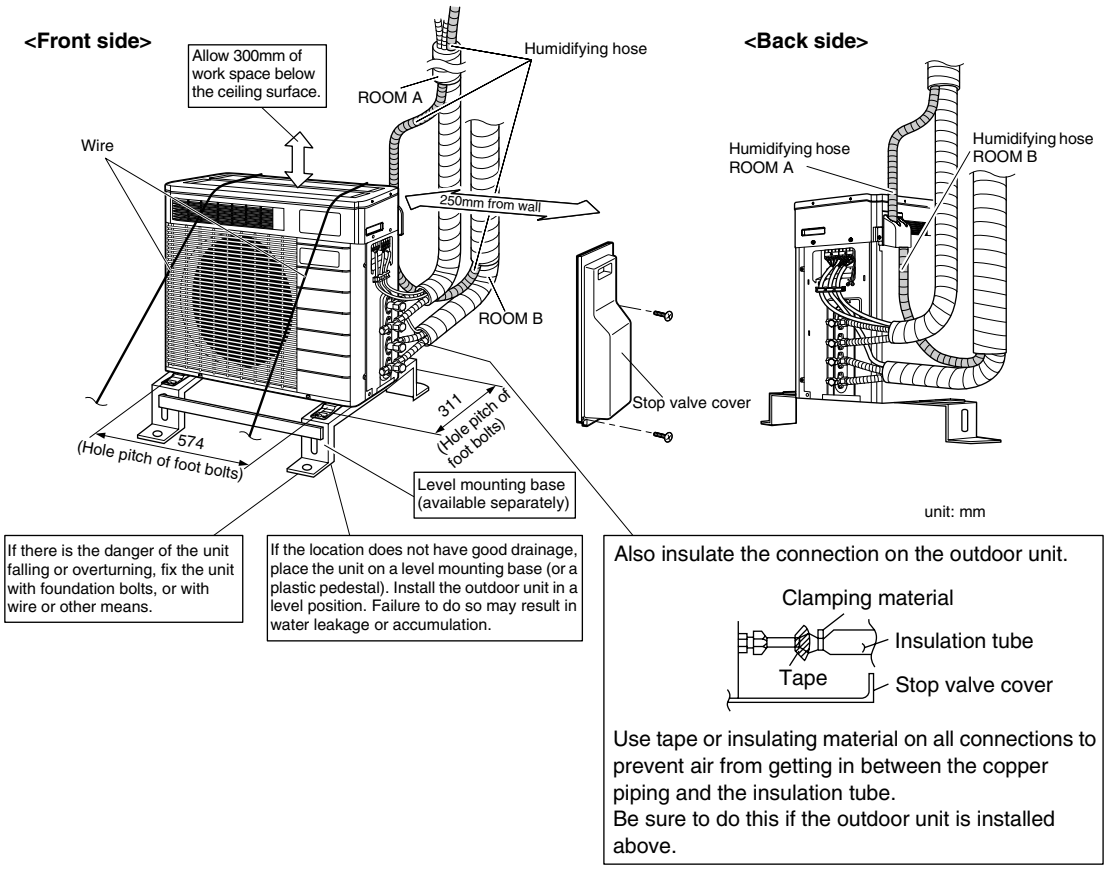


3

# Installation

- Install the unit horizontally.
- The unit may be installed directly on a concrete verandah or a solid place if drainage is good.
- If the vibration may possibly be transmitted to the building, use a vibration-proof rubber (field supply).

## 1. Connections (connection port).

Install the indoor unit according to the table below, which shows the relationship between the class of indoor unit and the corresponding port.
The total indoor unit class that can be connected to this unit:

2MXU40G∗ — Up to 6.0kW
2MXU50G∗ — Up to 8.5kW

| Port | 2MXU40G∗ | 2MXU50G∗ |
|---|---|---|
| A | 25, 35 | 25, 35, 42 |
| B | 25, 35 | (25),(35),(42), 50 |

( ) :Use a reducer to connect pipes.

Refer to "**How to Use Reducers**" for information on reducer numbers and their shapes.

# How to Use Reducers

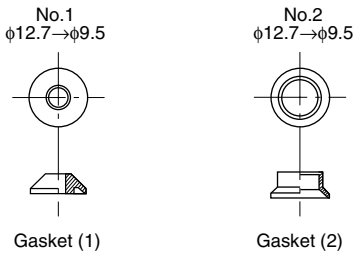


Use the reducers supplied with the unit as described below.

- Connecting a pipe of ϕ9.5 to a gas pipe connection port for ϕ12.7:

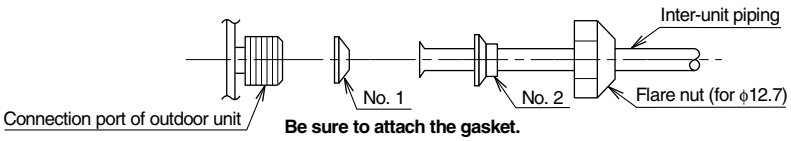


- When using the reducer packing shown above, be careful not to overtighten the nut, or the smaller pipe may be damaged (about 2/3 - 1 the normal torque).
- Apply a coat of refrigeration oil to the threaded connection port of the outdoor unit where the flare nut comes in.
- Use an appropriate wrench to avoid damaging the connection thread by overtightening the flare nut.

| Flare nut tightening torque | |
|---|---|
| Flare nut for ϕ12.7 | 49.5–60.3N • m (505–615kgf • cm) |

# Precautions on Installation

- Check the strength and level of the installation ground so that the unit will not cause any operating vibration or noise after installed.
- In accordance with the foundation drawing in fix the unit securely by means of the foundation bolts. (Prepare four sets of M8 or M10 foundation bolts, nuts and washers each which are available on the market.)
- It is best to screw in the foundation bolts until their length are 20mm from the foundation surface.

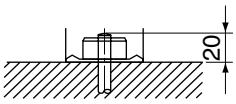


4

# Outdoor Unit Installation Guideline

- Where a wall or other obstacle is in the path of outdoor unit's intake or exhaust airflow, follow the installation guidelines below.
- For any of the below installation patterns, the wall height on the exhaust side should be 1200mm or less.

Wall facing one side

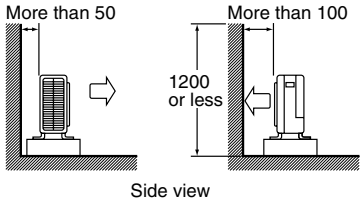


Walls facing two sides

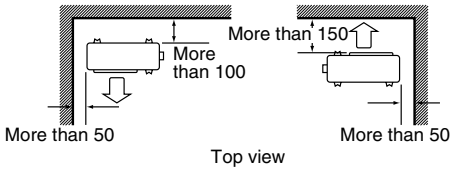


Walls facing three sides

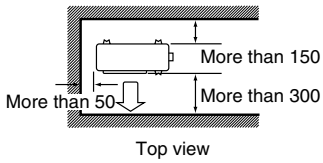


unit: mm

# Selecting a Location for Installation of the Indoor Units

- The maximum allowable length of refrigerant piping, and the maximum allowable height difference between the outdoor and indoor units, are listed below.
  (The shorter the refrigerant piping, the better the performance. Connect so that the piping is as short as possible. **Shortest allowable length per room is 3m.**)

| | |
|---|---|
| Piping to each indoor unit | ROOM A, B: 15m max. |
| Total length of piping between all units | 30m max. |

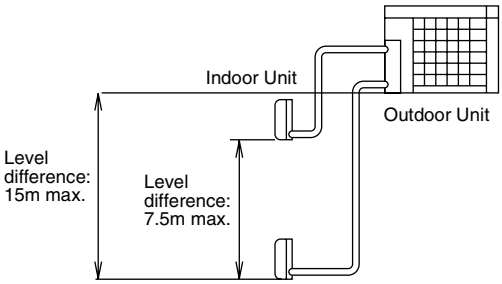


If the outdoor unit is positioned higher than the indoor units.

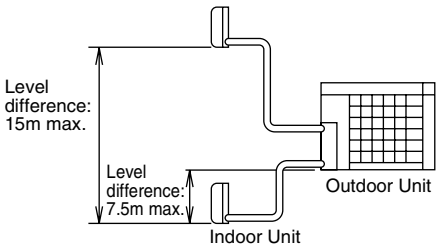


If the outdoor unit is positioned otherwise. (If lower thar one or more indoor units.)

5

# Refrigerant Piping Work

## 1. Installing outdoor unit.

1) When installing the outdoor unit, refer to "**Outdoor Unit Installation Drawings**" on page 3.
2) If drain work is necessary, follow the procedures below.

## 2. Drain work.

1) Use Ⓒ drain plug for drainage.
2) If the drain port is covered by a mounting base or floor surface, place additional foot bases of at least 30mm in height under the outdoor unit's feet.
3) In cold areas, do not use a drain hose with the outdoor unit. (Otherwise, drain water may freeze, impairing heating performance.)

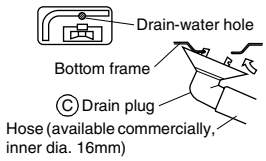


## 3. Refrigerant piping.

### ⚠ CAUTION

1) Use the flare nut fixed to the main unit. (To prevent cracking of the flare nut by aged deterioration.)
2) To prevent gas leakage, apply refrigeration oil only to the inner surface of the flare. (Use refrigeration oil for R410A.)
3) Use torque wrenches when tightening the flare nuts to prevent damage to the flare nuts and gas leakage.

Align the centres of both flares and tighten the flare nuts 3 or 4 turns by hand. Then tighten them fully with the torque wrenches.

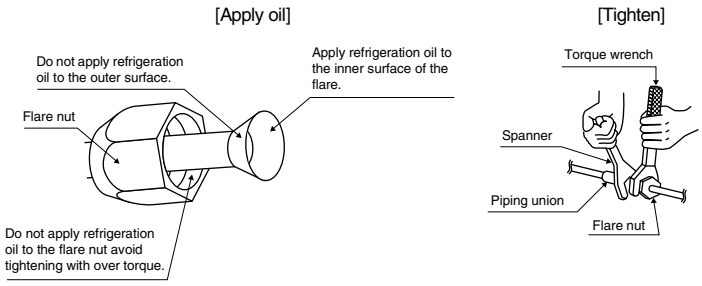


| Flare nut tightening torque | |
|---|---|
| Flare nut for ϕ6.4 | 14.2–17.2N • m (144–175kgf • cm) |
| Flare nut for ϕ9.5 | 32.7–39.9N • m (333–407kgf • cm) |
| Flare nut for ϕ12.7 | 49.5–60.3N • m (505–615kgf • cm) |

| Valve cap tightening torque | | |
|---|---|---|
| Gas side | | Liquid side |
| 3/8 inch | 1/2 inch | 1/4 inch |
| 21.6-27.4N • m (220-280kgf • cm) | 48.1-59.7N • m (490-610kgf • cm) | 21.6-27.4N • m (220-280kgf • cm) |

| | |
|---|---|
| Service port cap tightening torque | 10.8-14.7N • m (110-150kgf • cm) |

6

# Refrigerant Piping Work

## 4. Purging air and checking gas leakage.

**⚠ WARNING**

1) Do not mix any substance other than the specified refrigerant (R410A) into the refrigeration cycle.
2) When refrigerant gas leaks occur, ventilate the room as soon and as much as possible.
3) R410A, as well as other refrigerants, should always be recovered and never be released directly into the environment.
4) Be sure to check for gas leaks.

- Be sure to perform vacuum pumping for all the rooms at the same time.
- Be sure to use the special tools for the R410A (gauge manifold, charge hose, vacuum pump, vacuum pump adapter, etc.).
- Use a hexagonal wrench (4mm) to operate the stop valve rod.
- All refrigerant pipe joints should be tightened with a torque wrench at the specified tightening torque.

1) Connect the charge hose protrusions (the side for pushing the pin) for low pressure and high pressure on the gauge manifold to the gas stop valve service port for rooms **A and B**.

⇩

2) Fully open gauge manifold's low-pressure valve (Lo) and high-pressure valve (Hi).

⇩

3) Apply vacuum pumping for 20 minutes or longer. Check that the compound pressure gauge reads –0.1MPa (–76cmHg).

⇩

4) After checking the vacuum, close the low pressure and high pressure valves on the gauge manifold and stop the vacuum pump. (Leave as is for 4-5 minutes and make sure the coupling meter needle does not go back. ) If it does go back, this may indicate the presence of moisture or leaking from connecting parts.
After inspecting all the connection and loosening then retightening the nuts, repeat steps 2) → 3) → 4).

⇩

5) Remove the valve caps on the liquid and gas stop valves at the pipes for rooms A and B.

⇩

6) Open the valve rods on the liquid stop valves for rooms A and B by turning them 90° counterclockwise using a hex wrench. Close them 5 seconds later and check for gas leaks.
After checking for gas leaks, check the areas around flares on the indoor unit, and the areas around flares and valve rods on the outdoor unit by applying soapy water.
Wipe down thoroughly after the check is complete.

⇩

7) Remove the charge hose from the gas stop valve service ports at the pipes for rooms A and B and completely open the liquid and gas stop valves at the pipes for rooms A and B.
(Stop the valve rods as far as they go and do not attempt to turn them any further.)

⇩

8) Use a torque wrench to tighten the valve caps and service port caps on the liquid and gas stop valves at the pipes for rooms A and B to the designated torque.

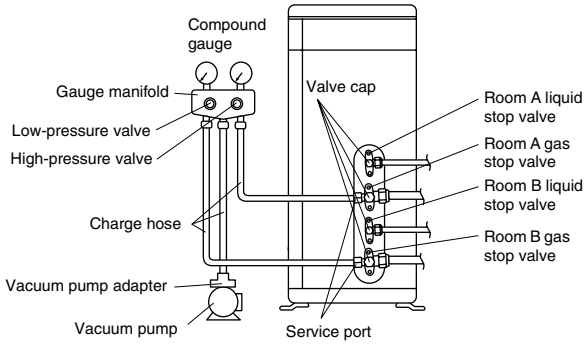


7

## 5. Refilling the refrigerant.

Check the type of refrigerant to be used on the machine nameplate.

**Precautions when adding R410A**

**Fill from the liquid pipe in liquid form.**

It is a mixed refrigerant, so adding it in gas form may cause the refrigerant composition to change, preventing normal operation.

1) Before filling, check whether the cylinder has a siphon attached or not. (It should have something like “liquid filling siphon attached” displayed on it.)

Filling a cylinder with an attached siphon

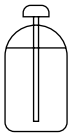

Stand the cylinder upright when filling.

There is a siphon pipe inside, so the cylinder need not be upside-down to fill with liquid.

Filling other cylinders

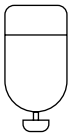

Turn the cylinder upside-down when filling.

2) Be sure to use the R410A tools to ensure pressure and to prevent foreign objects entering.

## 6. Charging with refrigerant.

- If the total length of piping for all rooms exceeds 20m, additionally charge with **(R410A) 20g** of refrigerant for each additional meter of piping.

### Important information regarding the refrigerant used

This product contains fluorinated greenhouse gases covered by the Kyoto Protocol.

Do not vent gases into the atmosphere.

Refrigerant type:**R410A**

GWP(1) value: **1975**

(1) GWP = global warming potential

Please fill in with indelible ink,

- ① the factory refrigerant charge of the product,
- ② the additional refrigerant amount charged in the field and
- ① + ② the total refrigerant charge

on the refrigerant charge label supplied with the product.

The filled out label must be adhered in the proximity of the product charging port (e.g. onto the inside of the stop valve cover).

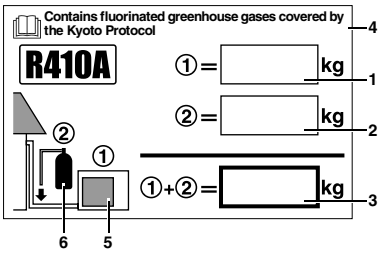


**1** factory refrigerant charge of the product: see unit name plate

**2** additional refrigerant amount charged in the field

**3** total refrigerant charge

**4** Contains fluorinated greenhouse gases covered by the Kyoto Protocol

**5** outdoor unit

**6** refrigerant cylinder and manifold for charging

**NOTE:**
National implementation of EU regulation on certain fluorinated greenhouse gases may require to provide the appropriate official national language on the unit. Therefor an additional multilingual fluorinated greenhouse gases label is supplied with the unit.
Sticking instructions are illustrated on the backside of that label.

### ⚠ CAUTION

1) Even though the stop valve is fully closed, the refrigerant may slowly leak out; do not leave the flare nut removed for a long period of time.
2) Do not overfill with refrigerant. This will break the compressor.

# Refrigerant Piping Work

## Precautions for Laying Refrigerant Piping

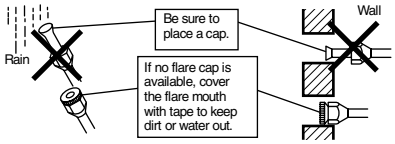


- **Cautions on pipe handling**
  1) Protect the open end of the pipe against dust and moisture.
  2) All pipe bends should be as gentle as possible. Use a pipe bender for bending.

- **Selection of copper and heat insulation materials**
  When using commercial copper pipes and fittings, observe the following:
  1) Insulation material: Polyethylene foam
     Heat transfer rate: 0.041 to 0.052W/mK (0.035 to 0.045kcal/mh°C)
     Refrigerant gas pipe's surface temperature reaches 110°C max.
     Choose heat insulation materials that will withstand this temperature.
  2) Be sure to insulate both the gas and liquid piping and to provide insulation dimensions as below.

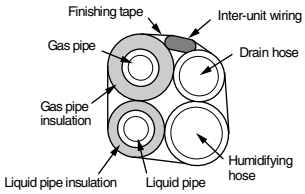


| Gas side | | Liquid side | Gas pipe thermal insulation | | Liquid pipe thermal insulation |
|---|---|---|---|---|---|
| 40 or 50class | 50 class | | 40 class | 50 class | |
| O.D. 9.5mm | O.D. 12.7mm | O.D. 6.4mm | I.D. 12-15mm | | I.D. 8-10mm |
| Minimum bend radius | | | Thickness 13mm Min. | | Thickness 10mm Min. |
| 30mm or more | 40mm or more | 30mm or more | | | |
| Thickness 0.8mm (C1220T-O) | | | | | |

  3) Use separate thermal insulation pipes for gas and liquid refrigerant pipes.

- **Flaring the pipe end**
  1) Cut the pipe end with a pipe cutter.
  2) Remove burrs with the cut surface facing downward so that the chips do not enter the pipe.
  3) Put the flare nut on the pipe.
  4) Flare the pipe.
  5) Check that the flaring is properly made.

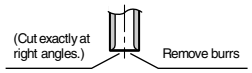


Flaring

Set exactly at the position shown below.

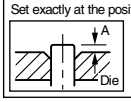


| | Flare tool for R410A | Conventional flare tool | |
|---|---|---|---|
| | Clutch-type | Clutch-type (Rigid-type) | Wing-nut type (Imperial-type) |
| A | 0-0.5mm | 1.0-1.5mm | 1.5-2.0mm |

Check

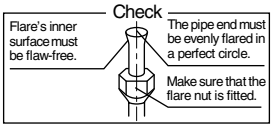


### ⚠ WARNING

1) Do not use mineral oil on flared part.
2) Prevent mineral oil from getting into the system as this would reduce the lifetime of the units.
3) Never use piping which has been used for previous installations. Only use parts which are delivered with the unit.
4) Do never install a drier to this R410A unit in order to guarantee its lifetime.
5) The drying material may dissolve and damage the system.
6) Incomplete flaring may cause refrigerant gas leakage.

9

# Pump Down Operation

**In order to protect the environment, be sure to pump down when relocating or disposing of the unit.**

1) Remove the valve caps on the liquid and the gas stop valves at the pipes for rooms A and B.
2) Run the unit on forced cooling. (Refer to the below.)
3) After 5 to 10 minutes, close the liquid stop valves at the pipes for rooms A and B using a hex wrench.
4) After 2 to 3 minutes, stop the FORCED COOLING operation as quickly as possible after the gas stop valves at the pipes for rooms A and B have been shut off.
5) Turn the power breaker off.

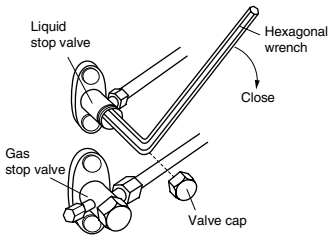


**⚠ CAUTION**

Run the air conditioner to cool both rooms A and B when performing a pump down.

## 1. FORCED COOLING operation.

**1-1 Using the indoor unit "ON/OFF" button.**

1) Press the "ON/OFF" button on the indoor unit in either room A or B for 5 seconds continuously. The units in both rooms will start.
2) FORCED COOLING operation will end after around 15 minutes and the unit will stop automatically. Press the ON/OFF" button on the indoor unit to FORCED COOLING operation to stop.
3) **Use this method to FORCED COOLING operation when the outside temperature is 10°C or lower.**

**1-2 Using the wireless remote controller.**

1) Select cooling operation and press the "ON/OFF" button. (The unit will start.)
2) Press the "TEMP ▲ ▼" button (2 locations), and the "MODE" button at the same time.
3) Press the "MODE" button twice. (ﾃｽﾄ will be displayed and the unit will go into test-run mode.)
4) Test-run mode will end after around 30 minutes and the unit will stop automatically. Press the "ON/OFF" button to force the test-run to stop.

**⚠ CAUTION**

If the outside temperature is 10°C or lower, the safety device might start, preventing operation. In this situation, warm the outside temperature thermistor on the outdoor unit to 10°C or warmer. Operation will start.

# Connecting the Humidifying Hose

**Either one of the following sets (optional accessories) is required when connecting humidifying hoses. Prepare the 10 or 15m set according to the conditions of the site.**

**<Optional accessories>**

KPMH996A10S (10m set)

| Ⓐ Joint (ϕ25) | Ⓑ Binding band | Humidifying hose | | Ⓔ Installation manual |
|---|---|---|---|---|
| | | Ⓒ 8m (With cuff) (I.D. 25mm O.D. 35mm) | Ⓓ 2m (With cuff) (I.D. 25mm O.D. 35mm) | |
| 1 | 2 | 1 | 1 | 1 |

KPMH996A15S (15m set)

| Ⓕ Joint (ϕ30) | Ⓖ Reducing joint (ϕ30→ϕ25) | Ⓑ Binding band | Humidifying hose | | | Ⓔ Installation manual |
|---|---|---|---|---|---|---|
| | | | Ⓗ 7.5m (I.D. 30mm O.D. 46mm) | Ⓙ 3.5m (I.D. 30mm O.D. 46mm) | Ⓓ 2m (With cuff) I.D. 25mm O.D. 35mm) | |
| 1 | 2 | 6 | 1 | 1 | 2 | 1 |

# Connecting the Humidifying Hose

## 1. Connecting to indoor unit.

Keep the following items in mind in order to prevent the degrading of humidification performance when connecting the humidifying hose to the indoor unit.

1) Cut the excessive portions of the humidifying hoses.
   * Determine the overall length of the humidifying hoses according to the installation manual for the indoor unit.
2) Be sure to avoid traps as much as possible when installing the humidifying hoses.
3) Be careful not to crush the humidifying hoses in the case of bending the hoses at the time of installation. Furthermore, make sure that the maximum bending radius will not exceed 90°.
4) Check that the overall length of the humidifying hoses is definitely 3m or more.
5) Attach a cover to the end of each humidifying hose so that no moisture or foreign substance will go into the hose when leaving the hose without being connected to the outdoor and indoor units.

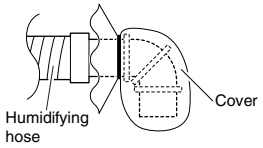


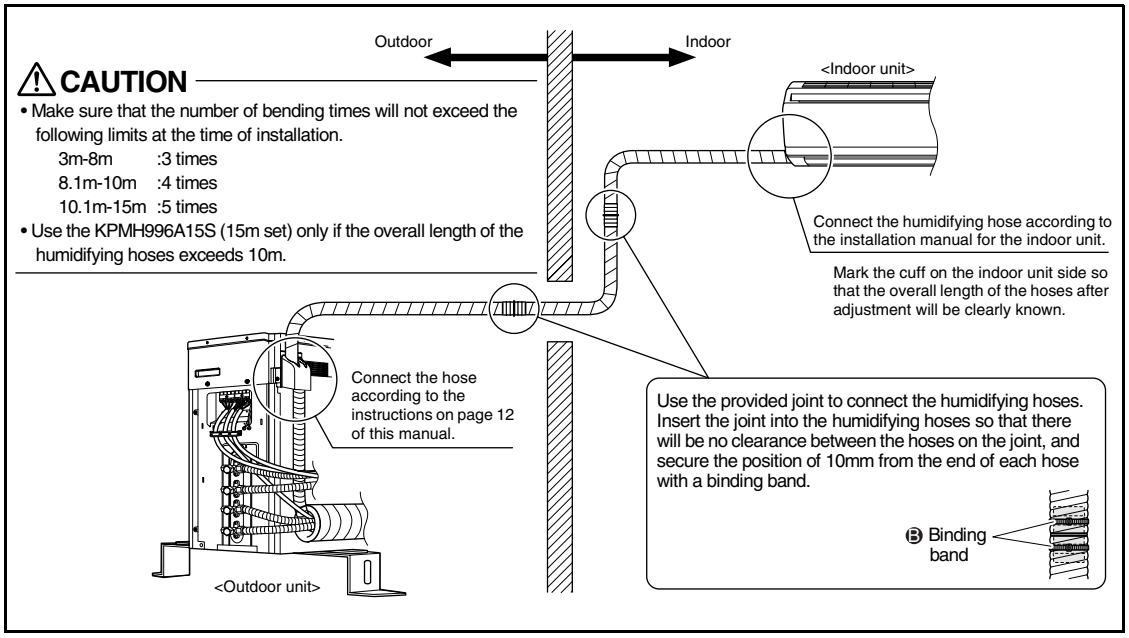


### ■ Connecting KPMH996A10S (10m set)

1) Be sure to connect the Ⓒ 8m hose to the indoor unit and the Ⓓ 2m hose to the outdoor unit, respectively, and join the 2 hoses with the Ⓐ joint.

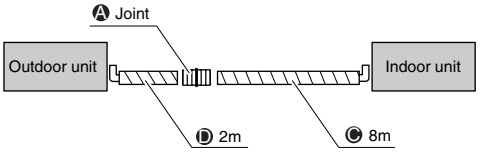


• Cut the Ⓒ 8m hose to adjust the overall length of the humidifying hoses.

### ■ Connecting KPMH996A15S (15m set)

• Use the KPMH996A15S (15m set) only if the overall length of the humidifying hoses exceeds 10m.

1) Be sure to connect one of the Ⓓ 2m hoses (provided with a cuff each) to the indoor unit and the other one to the outdoor unit.
   Connect the Ⓗ 7.5m hose and Ⓙ 3.5m hose midway to adjust the overall length.

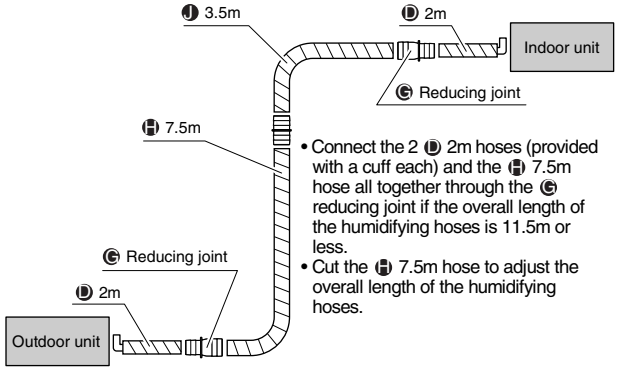


11

## 2. Connecting to outdoor unit.

There are 2 ways to connect humidifying hoses to the outdoor unit.

Connecting through the path under the humidifying hoses cover

1) Connect the Ⓓ humidifying hose (2m) to the humidifying duct on the back of the outdoor unit. In that case, make sure that the centreline on the cuff of the hose coincides with mark above the connecting port.
   * The Ⓕ humidifying hose cover cannot be mounted unless ∇ mark coincides with the centreline.

2) Mount the Ⓕ humidifying hose cover.
   Insert the 4 tabs of the cover as shown in the figure.

3) Tighten the Ⓔ screw and secure the Ⓕ humidifying hose cover and outdoor unit.

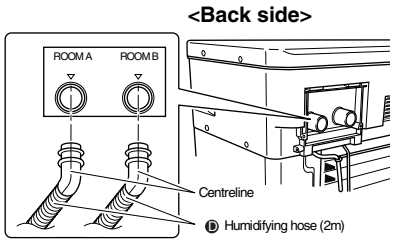


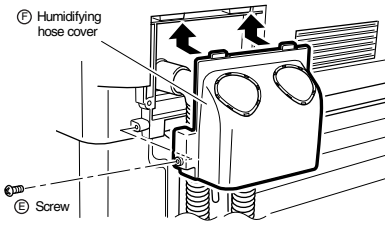


Connecting through the path above the humidifying hose cover

1) Cut out the knockout hole on the Ⓕ humidifying hose cover.

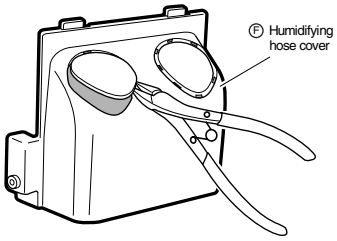


2) Insert the Ⓓ humidifying hose (2m) into the knockout hole.

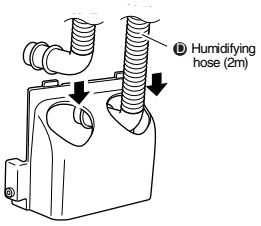


3) Insert the Ⓓ humidifying hose into the humidifying duct on the back of the outdoor unit.

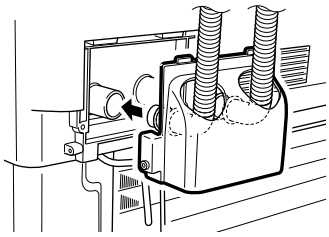

4) Mount the Ⓕ humidifying hose cover.
   Insert the 4 tabs of the cover as shown in the figure.

5) Tighten the Ⓔ screw and secure the Ⓕ humidifying hose cover and outdoor unit.

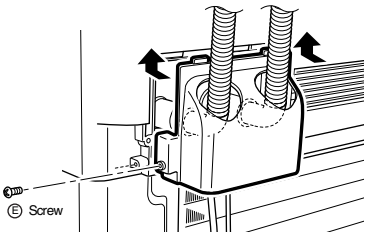


12

# Wiring

## ⚠ WARNING

1) Do not use tapped wires, stranded wires (**CAUTION** 1)), extension cords, or starburst connections, as they may cause overheating, electrical shock, or fire.
2) Do not use locally purchased electrical parts inside the product. (Do not branch the power for the drain pump, etc., from the terminal block.) Doing so may cause electric shock or fire.
3) Be sure to install an earth leakage breaker. (One that can handle higher harmonics.)
   (This unit uses an inverter, which means that it must be used an earth leakage breaker capable handling harmonics in order to prevent malfunctioning of the earth leakage breaker itself.)
4) Use an all-pole disconnection type breaker with at least 3mm between the contact point gaps.

• Do not turn ON the safety breaker until all work is completed.

1) Strip the insulation from the wire (20mm).
2) Connect the connection wires between the indoor and outdoor units **so that the terminal numbers match.**
   Tighten the terminal screws securely. We recommend a flathead screwdriver be used to tighten the screws. The screws are packed with the terminal board.

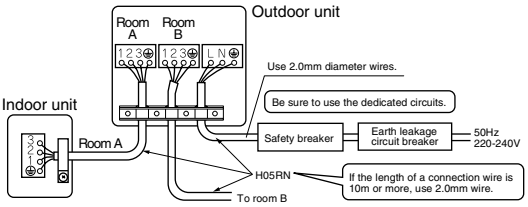


## ⚠ CAUTION

1) In case using stranded wires is unavoidable for some reason, make sure to install the round crimp-style terminals on the tip. Place the round crimp-style terminals on the wires up to the covered part and secure in place.

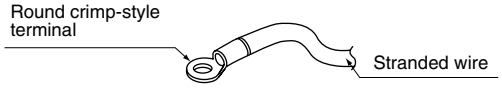


2) When connecting the connection wires to the terminal board using a single core wire, be sure to perform curling.
   Problems with the work may cause heat and fires.

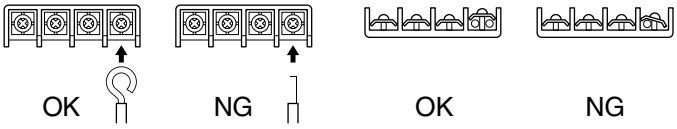


3) Pull the wire and make sure that it does not disconnect. Then fix the wire in place with a wire retainer.

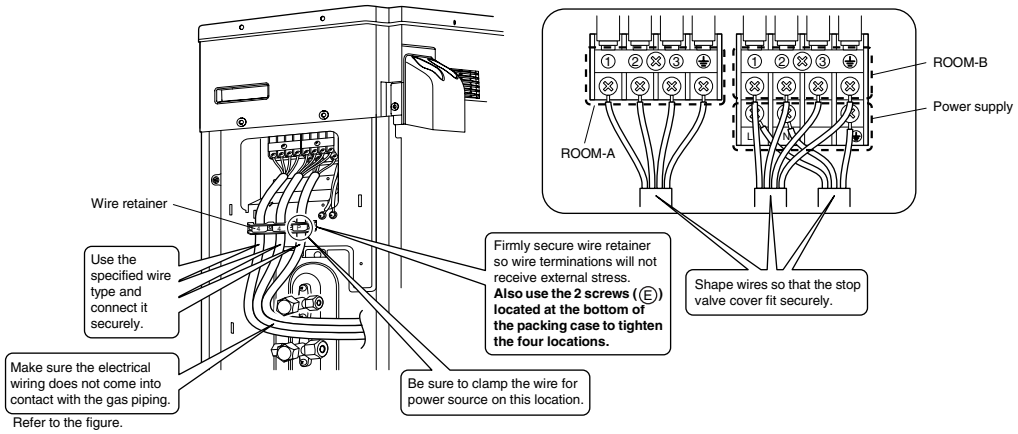


Make sure connecting the piping and connecting wiring fit into ▨. (Incorrect handling will make it hard to attach the stop valve cover, causing deformation.)

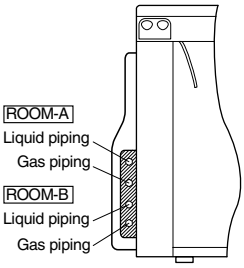


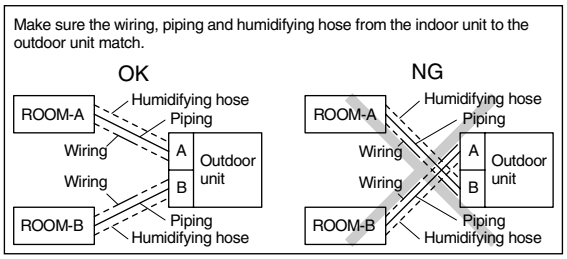


13

# Test Run and Final Check

• Before starting the test run, measure the voltage at the primary side of the safety breaker.
• Check that all liquid and gas stop valves are fully open.
• Check that piping and wiring all match.

## 1. Test run and final check.

1) To test cooling, set for the lowest temperature. To test heating, set for the highest temperature. (Depending on the room temperature, only heating or cooling (but not both) may be possible.)
2) After the unit is stopped, it will not start again (heating or cooling) for approximately 3 minutes.
3) During the test run, first check the operation of each unit individually. Then also check the simultaneous operation of all indoor units.
Check both heating and cooling operation.
4) After running the unit for approximately 20 minutes, measure the temperatures at the indoor unit inlet and outlet. If the measurements are above the values shown in the table below, then they are normal.

| | Cooling | Heating |
|---|---|---|
| Temperature difference between inlet and outlet | Approx. 8°C | Approx. 15°C |

(When running in one room)

5) During cooling operation, frost may form on the gas stop valve or other parts. This is normal.
6) Operate the indoor units in accordance with the included operation manual. Check that they operate normally.

## 2. Items to check.

| Check item | Consequences of trouble | Check |
|---|---|---|
| Are the indoor units installed securely? | Falling, vibration, noise | |
| Has an inspection been made to check for gas leakage? | No cooling, no heating | |
| Has complete thermal insulation been done (gas pipes, liquid pipes, indoor portions of the drain hose extension)? | Water leakage | |
| Is the drainage secure? | Water leakage | |
| Are the ground wire connections secure? | Danger in the event of a ground fault | |
| Are the electric wires connected correctly? | No cooling, no heating | |
| Is the wiring in accordance with the specifications? | Operation failure, burning | |
| Are the inlets/outlets of the indoor and outdoor units free of any obstructions? Are the stop valves open? | No cooling, no heating | |
| Do the marks match (room A, room B) on the wiring and piping for each indoor unit? | No cooling, no heating | |
| Has the overall length of the humidifying hoses been set correctly? (Note 1) | No humidification or loud operating sound | |
| Are the connections of the humidifying hoses correct? (Note 2) | No humidification or unusual sound in the other room | |

Note 1: Set the overall length of the humidifying hoses correctly according to the operation manual after the humidifying hoses are installed.

Note 2: Check that the connections of the humidifying hoses are correct.
Ventilation in room A (tap H)
↓
Go to room B and check that there is no air distribution sound from the indoor unit.
↓
If air distribution sound is heard in room B, interchange the humidifying hoses on the outdoor unit for rooms A and B.

### ■ ATTENTION

1) Have the customer actually operate the unit while looking at the manual included with the indoor unit. Instruct the customer how to operate the unit correctly (particularly cleaning of the air filters, operation procedures, and temperature adjustment).
2) Even when the air conditioner is not operating, it consumes some electric power. If the customer is not going to use the unit soon after it is installed, turn OFF the breaker to avoid wasting electricity.
3) If additional refrigerant has been charged because of long piping, list the amount added on the nameplate on the reverse side of the stop valve cover.



C: 3P234246-1

# 2. System Configuration

After the installation and test operation of the room air conditioner have been completed, it should be operated and handled as described below. Every user would like to know the correct method of operation of the room air conditioner, to check if it is capable of cooling (or heating) well, and to know a clever method of using it.
In order to meet this expectation of the users, giving sufficient explanations taking enough time can be said to reduce about 80% of the requests for servicing. However good the installation work is and however good the functions are, the customer may blame either the room air conditioner or its installation work because of improper handling. The installation work and handing over of the unit can only be considered to have been completed when its handling has been explained to the user without using technical terms but giving full knowledge of the equipment.

# 3. Operation Manual

## 3.1 Names of Parts

### Name of Parts

■ **Indoor Unit**

**1.Air filter**

**2.Titanium apatite photocatalytic air-purifying filter:**
- These filters are attached to the inside of the air filters.

**3.Air inlet**

**4.Front panel**

**5.Panel tab**

**6.Room temperature and humidity sensors:**
- It senses the air temperature and humidity around the unit.

**7.INTELLIGENT EYE sensor:** (page 15.)

**8.Control panel**

**9.Air outlet**

**10.Flaps (horizontal blades):** (page 10.)

**11.Louvers (vertical blades):**
- The louvers are inside of the air outlet. (page 10.)

**12.Air supply filter (gray)**

**13.Indoor Unit ON/OFF switch:** (page 8.)
- Push this switch once to start operation. Push once again to stop it.
- The operation mode refers to the following table.

| Mode | Temperature setting | Airflow rate |
|---|---|---|
| AUTO | 25°C | AUTO |

- This switch is useful when the remote controller is missing.

**14.Multi-monitor lamp:** (page 8.)
- The lamp color changes according to the operation.
  - AUTO ..... Blue/Red
  - DRY ..... Green
  - COOL ..... Blue
  - HEAT ..... Red
  - FAN ..... White

**15.TIMER lamp (yellow):** (page 19.)

**16.INTELLIGENT EYE lamp (green):** (page 15.)

**17.Signal receiver:**
- It receives signals from the remote controller.
- When the unit receives a signal, you will hear a short beep.
  - Operation start ..... beep-beep
  - Settings changed ..... beep
  - Operation stop ..... beeeeep

■ **Outdoor Unit**

**18.Air inlet:** (Back and side)

**19.Refrigerant piping, humidifying hose and inter-unit cables**

**20.Drain hoses**

**21.Earth terminals:**
- It is inside of this cover.

**22.Air outlet**

**23.Humidifying hoses**

**24.Humidity unit**

**Indoor Unit**

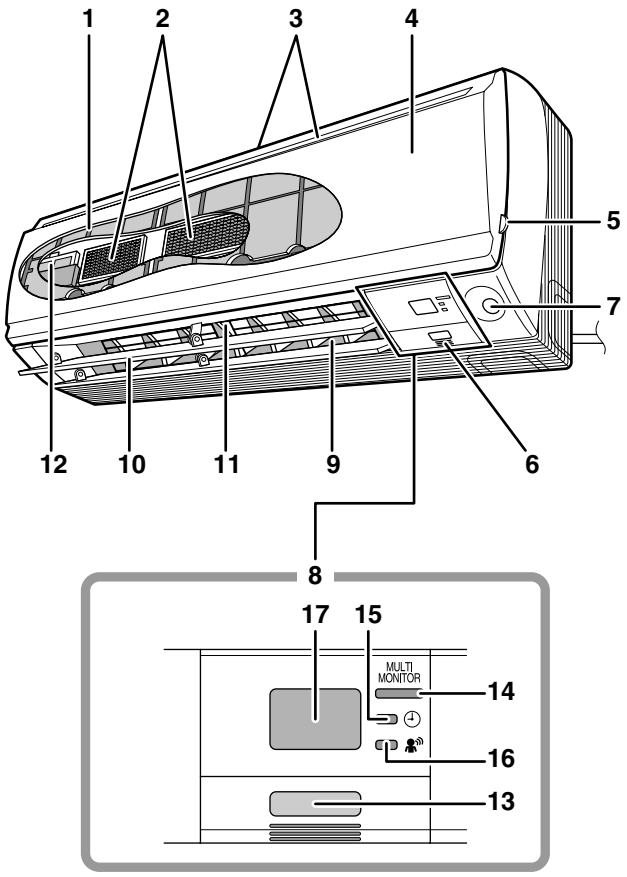


**Outdoor Unit**

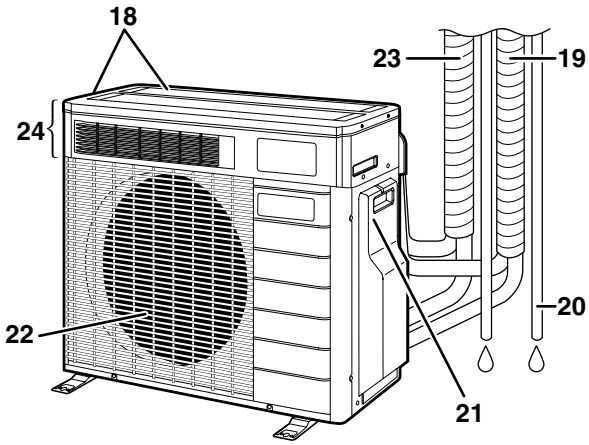


4

## Remote Controller

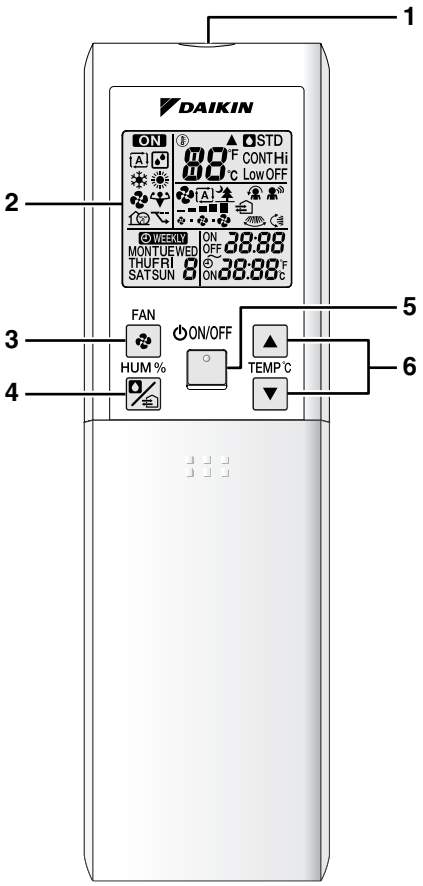


<ARC452A5>

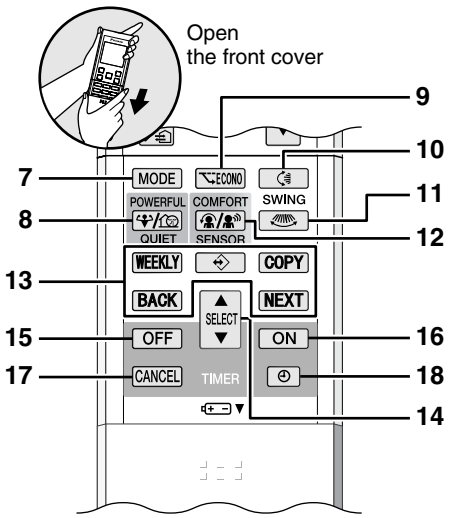


### ■ Remote Controller

**1.Signal transmitter:**
- It sends signals to the indoor unit.

**2.Display (LCD):**
- It displays the current settings.
  (In this illustration, each section is shown with its displays ON for the purpose of explanation.)

**3.FAN setting button:**
- It selects the airflow rate setting.

**4.HUMIDIFY/VENTILATE button:**
- HUMID HEAT operation and FRESH AIR SUPPLY VENTILATION (page 12.)

**5.ON/OFF button:**
- Press this button once to start operation. Press once again to stop it.

**6.TEMPERATURE adjustment buttons:**
- It changes the temperature setting.

**7.MODE selector button:**
- It selects the operation mode. (AUTO/DRY/COOL/HEAT/FAN) (page 8.)

**8.POWERFUL/QUIET button:**
- POWERFUL and OUTDOOR UNIT QUIET operation (page 17.)

**9.ECONO button:**
- ECONO operation (page 18.)

**10.SWING button:**
- Flaps (horizontal blades) (page 10.)

**11.SWING button:**
- Louvers (vertical blades) (page 10.)

**12.COMFORT/SENSOR button:**
- COMFORT AIRFLOW and INTELLIGENT EYE operation (page 15.)

**13.** WEEKLY **: WEEKLY button**
**: PROGRAM button**
COPY **: COPY button**
BACK **: BACK button**
NEXT **: NEXT button:**
- WEEKLY TIMER operation (page 21.)

**14.SELECT button:**
- It changes the ON/OFF TIMER and WEEKLY TIMER settings. (page 19, 20, 22.)

**15.OFF TIMER button:** (page 19.)

**16.ON TIMER button:** (page 20.)

**17.TIMER CANCEL button:**
- It cancels the timer setting. (page 19, 20.)
- It cannot be used for the WEEKLY TIMER operation.

**18.CLOCK button:**

5

# 3.2 AUTO · DRY · COOL · HEAT · FAN Operation

## AUTO · DRY · COOL · HEAT · FAN Operation

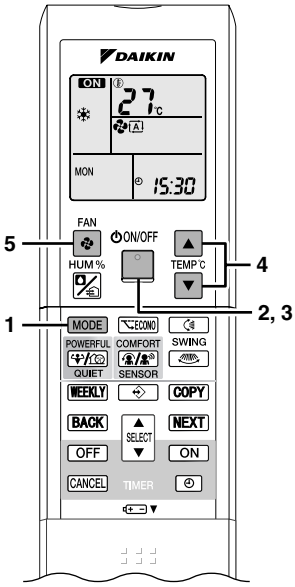


The air conditioner operates with the operation mode of your choice.
From the next time on, the air conditioner will operate with the same operation mode.

### ■ To start operation

**1. Press "MODE selector" button and select a operation mode.**

• Each pressing of the button advances the mode setting in sequence.

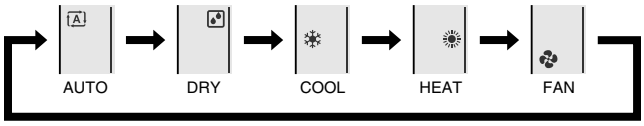


**2. Press "ON/OFF" button.**

• " ON " is displayed on the LCD.
• The OPERATION lamp lights up.

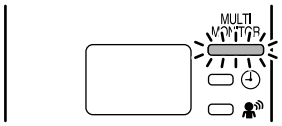


| Operation mode | Multi-monitor lamp |
|---|---|
| AUTO | Blue/Red |
| DRY | Green |
| COOL | Blue |
| HEAT | Red |
| FAN | White |
| HUMID HEAT | Orange/Yellow (page 12.) |
| FRESH AIR SUPPLY VENTILATION | Lit white for 2 seconds. After that, return to the color of selected operation mode or change to yellow in a standby state. (page 14.) |

### ■ To stop operation

**3. Press "ON/OFF" button again.**

• " ON " disappear from the LCD.
• Then OPERATION lamp goes off.

### ■ To change the temperature setting

**4. Press "TEMPERATURE adjustment" button.**

• The displayed items on the LCD will change whenever either one of the buttons is pressed.

| DRY or FAN mode | COOL mode | HEAT mode | AUTO mode |
|---|---|---|---|
| The temperature setting is not variable. | 18 – 32°C | 10 – 30°C | 18 – 30°C |
| | Press " ▲ " button to raise the temperature and press " ▼" button to lower the temperature. | | |

8

## ■ To change the airflow rate setting

### 5. Press “FAN setting” button.

| DRY mode | AUTO or COOL or HEAT or FAN mode |
|---|---|
| The airflow rate setting is not variable. | Five levels of airflow rate setting from “ ” to “ ” plus “ A ” and “ ” are available. |

- Indoor unit quiet operation
  When the airflow is set to “ ”, the noise from the indoor unit will become quieter.
  Use this when making the noise quieter.
- Each pressing of the button advances the airflow rate setting in sequence.

## NOTE

■ **Notes on HEAT operation**
- Since this air conditioner heats the room by taking heat from outdoor air to indoors, the heating capacity becomes smaller in lower outdoor temperatures. If the heating effect is insufficient, it is recommended to use another heating appliance in combination with the air conditioner.
- The heat pump system heats the room by circulating hot air around all parts of the room. After the start of heating operation, it takes some time before the room gets warmer.
- In heating operation, frost may occur on the outdoor unit and lower the heating capacity. In that case, the system switches into defrosting operation to take away the frost.
- During defrosting operation, hot air does not flow out of indoor unit.
- A pinging sound may be heard during defrosting operation, which, however does not mean that the air conditioner has failures.

■ **Note on COOL operation**
- This air conditioner cools the room by blowing the hot air in the room outside, so if the outside temperature is high, the performance of the air conditioner drops.

■ **Note on DRY operation**
- The computer chip works to rid the room of humidity while maintaining the temperature as much as possible. It automatically controls temperature and airflow rate, so manual adjustment of these functions is unavailable.

■ **Notes on AUTO operation**
- In AUTO operation, the system selects a temperature setting and an appropriate operation mode (COOL or HEAT) based on the room temperature at the start of the operation.
- The system automatically reselects setting at a regular interval to bring the room temperature to user-setting level.
- If you do not like AUTO operation, manually change the set temperature.

■ **Note on FAN operation**
- This mode is valid for fan only.

■ **Note on airflow rate setting**
- At smaller airflow rates, the cooling (heating) effect is also smaller.

# 3.3 Adjusting the Airflow Direction

## Adjusting the Airflow Direction

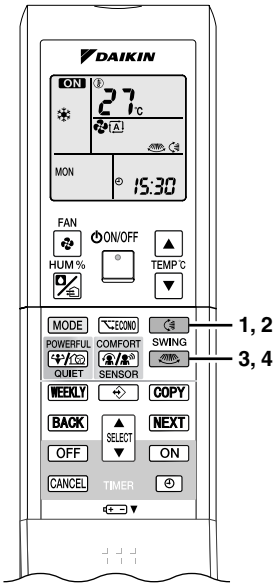


You can adjust the airflow direction to increase your comfort.

### Adjusting the upper and lower airflow direction

#### ■ To adjust the flaps (horizontal blades)

**1. Press "SWING " button.**

- " " is displayed on the LCD and the flaps will begin to swing.

**2. When the flaps have reached the desired position, press "SWING " button once more.**

- The flaps will stop moving.
- " " disappears from the LCD.

### Adjusting the right and left airflow direction

#### ■ To adjust the louvers (vertical blades)

**3. Press "SWING " button.**

- " " is displayed on the LCD.

**4. When the louvers have reached the desired position, press the "SWING " button once more.**

- The louvers will stop moving.
- " " disappears from the LCD.

10

## Adjusting the 3-D airflow direction

### ■ To start 3-D airflow

**1. 3. Press the "SWING " button and the "SWING " button: the " " and " " display will light up and the flap and louvers will move in turn.**

### ■ To cancel 3-D airflow

**2. 4. Press either the "SWING " button or the "SWING " button.**

### ■ COMFORT AIRFLOW operation

• Check COMFORT AIRFLOW operation in the section of "COMFORT AIRFLOW Operation" and "INTELLIGENT EYE Operation". (page 15.)

## NOTE

■ **Notes on flaps and louvers angles**

• When "**SWING**" button is selected, the flaps swinging range depends on the operation mode. (See the figure.)

**3-Dimensional (3-D) airflow**

• Using 3-dimensional airflow circulates cold air, which tends to collected at the bottom of the room, and hot air, which tends to collect near the ceiling, throughout the room, preventing areas of cold and hot developing.

■ **ATTENTION**

• Always use a remote controller to adjust the angles of the flaps and louvers. If you attempt to move it forcibly with hand when it is swinging, the mechanism may be broken.

• Always use a remote controller to adjust the louvers angles. In side the air outlet, a fan is rotating at a high speed.

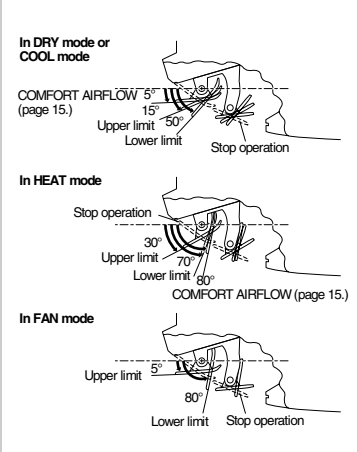


11

# 3.4 HUMID HEAT Operation

## HUMID HEAT Operation

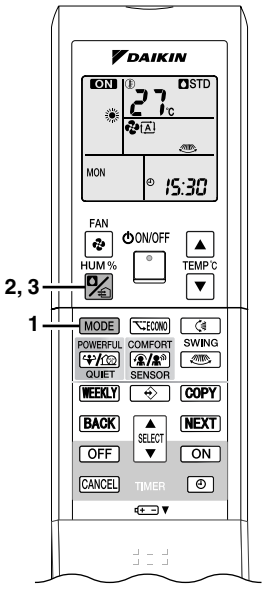


This function enables the humidification of a room where the air conditioner is in HEAT operation, thus providing appropriate humidity to the room if the function is used in wintertime during which the air is dry.
When the humidity of the room is high, the user will feel warm enough even if the set temperature is dropped.

### ■ To start HUMID HEAT operation

**1. Press "MODE selector" button, and select a Heat mode.**

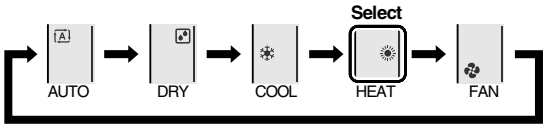


- " ☀ " is displayed on the LCD.
- The multi-monitor lamp will be red.

**2. Press "HUMIDIFY/VENTILATE" button, and select a Humidity settings.**

- The multi-monitor lamp will be orange.
- Each press of the button advances the humidity settings in sequence.

| Remote controller LCD | Humidity settings | Multi-monitor lamp |
|---|---|---|
| CONT | Continuous | Orange/*1Yellow |
| Hi | High | |
| STD | Standard | |
| Low | Low | |
| OFF | HUMID HEAT operation → OFF<br>Refer to FRESH AIR SUPPLY VENTILATION (page 14.) | Red/*1Yellow |
| OFF | FRESH AIR SUPPLY VENTILATION → OFF | Red |

*1 When the unit cannot operate HUMID HEAT operation or FRESH AIR SUPPLY VENTILATION and go into a standby state, the multi-monitor lamp will be yellow. (page 13.)

### ■ To cancel HUMID HEAT operation

**3. Press "HUMIDIFY/VENTILATE" button, and select a OFF.**

- The multi-monitor lamp will be red. (*Return to HEAT operation.)

### NOTE

**■ Notes on HUMID HEAT operation**

- The HUMID HEAT operation function is selectable only when the air conditioner is in HEAT operation.
- The operation sound of the air conditioner will rise by slightly while the air conditioner is in humidifying or ventilating operation.
- While the indoor unit in one room out of two is in HUMID HEAT operation, the indoor unit in the other room will go into humidification stand-by mode regardless of the selection of the HUMID HEAT operation function for the other room.
  When the indoor unit in HUMID HEAT operation attains the target humidity, the indoor unit in humidification stand-by mode in the other room will start HUMID HEAT operation.
- The ability of the unit to humidify drops when the outdoor temperature and humidity are low, or when the set airflow rate is low.
- The operation noise is higher than in normal HEAT.
- The outdoor noise or odor may be captured because the outdoor air is heated with the heater and resultant moisture is taken into the room for humidification.
- The top of the outdoor unit may get warm during operation, but this is not a malfunction.
- The operation noise may change depending on the outdoor temperature and humidity. (Water supply is not necessary because moisture from the outdoor air is taken into the room.)

12

## NOTE

■ **Notes on "HUMID HEAT operation" at multi system**

- When the indoor units in both 2 rooms are set to HUMID HEAT operation/FRESH AIR SUPPLY VENTILATION, the indoor unit in either 1 of the room operate HUMID HEAT operation/FRESH AIR SUPPLY VENTILATION.
  (The indoor units in both 2 rooms do not simultaneously go into HUMID HEAT operation/FRESH AIR SUPPLY VENTILATION.)
  Priority is given to the indoor unit in either one of the rooms already in operation. When the humidity of the room to which priority is given reaches a target level, the humidification of the room will stop and the humidification of the other room will start automatically. (page 26.)

■ **Refer to the following application examples**

**Example 1** :The indoor units in both 2 rooms are in HUMID HEAT operation.

**Initial state of operation**

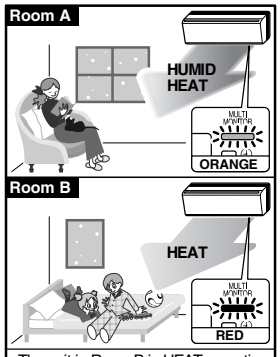


- The unit in Room B in HEAT operation will be changed into HUMID HEAT operation while the unit in Room A is in HUMID HEAT operation.
  The result is shown in the illustration on the right.

- **While the unit in Room A is in "CONT" HUMID HEAT operation, the unit in Room B will not go into HUMID HEAT operation automatically as right example. (The multi-monitor lamp is yellow in a standby state.)**

**First selected priority**

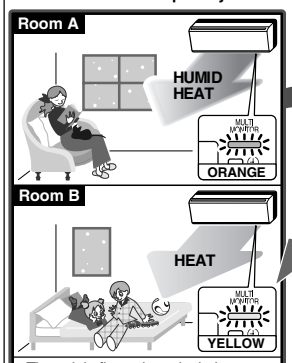


- The unit in first selected priority operation in Room A will take precedence, and the unit in Room B will go into a standby state. (Yellow) When the humidity of Room A satisfies the preset condition, HUMID HEAT operation in Room A will be switched to the unit in Room B automatically.
  The result is shown in the illustration on the right.

**Automatic switchover between 2 rooms**

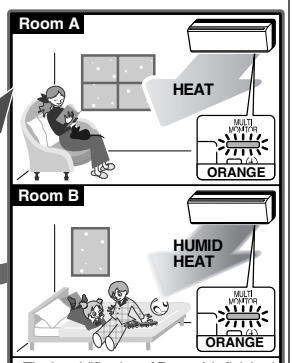


- The humidification of Room A is finished, and the unit in a standby state in Room B will go into HUMID HEAT operation. When the humidity of Room A drops, the unit in Room A will be switched HUMID HEAT operation and the unit in Room B will be switched HEAT operation automatically. (Because the unit in Room A is first selected priority.)
  The result is shown in the illustration on the left.

**Example 2** :The indoor units in the rooms are in HUMID HEAT operation and FRESH AIR SUPPLY VENTILATION, respectively.

**Initial state of operation**

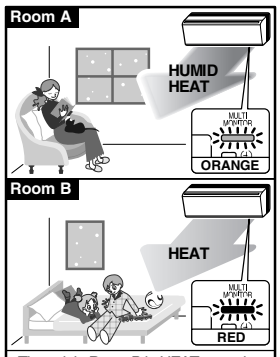


- The unit in Room B in HEAT operation will be added ventilation while the unit in Room A is in HUMID HEAT operation.
  The result is shown in the illustration on the right.

**First selected priority**

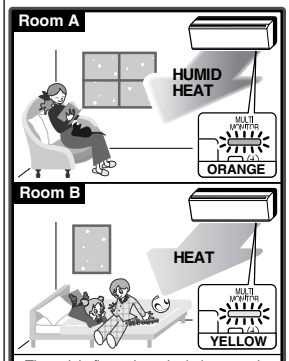


- The unit in first selected priority operation in Room A will take precedence.
  The unit in Room B keeps HEAT operation and will go into a standby state for ventilation. (Yellow)
  In case you will start ventilation the unit in Room B, the HUMID HEAT operation of Room A have to be stopped.
  The result is shown in the illustration on the right.

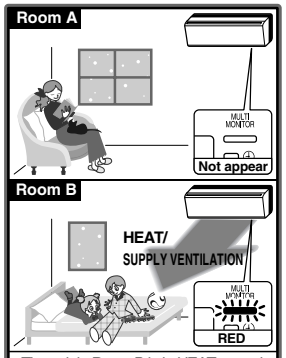


- The unit in Room B is in HEAT operation besides ventilation.

13

# 3.5 FRESH AIR SUPPLY VENTILATION

## FRESH AIR SUPPLY VENTILATION

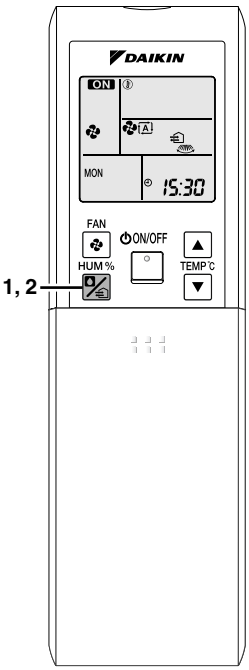


This function takes in outdoor air to refresh indoor air.

### ■ To start FRESH AIR SUPPLY VENTILATION

**1. Press "HUMIDIFY/VENTILATE" button, and select a FRESH AIR SUPPLY VENTILATION mode.**

| Mode | Cyclic of humidity settings | Multi-monitor lamp |
|---|---|---|
| HEAT | CONT → Hi → STD → Low → OFF (Select) → OFF | Lit white for 2 seconds. After that, return to the color of selected operation mode or change to yellow in a standby state. |
| AUTO COOL DRY FAN | → OFF | |

• " " is displayed on the LCD.

### ■ To cancel FRESH AIR SUPPLY VENTILATION

**2. Press "HUMIDIFY/VENTILATE" button, and select a OFF.**

• " " disappears from the LCD.

**NOTE**

■ **Notes on FRESH AIR SUPPLY VENTILATION**
An example of FRESH AIR SUPPLY VENTILATION (page 26.)

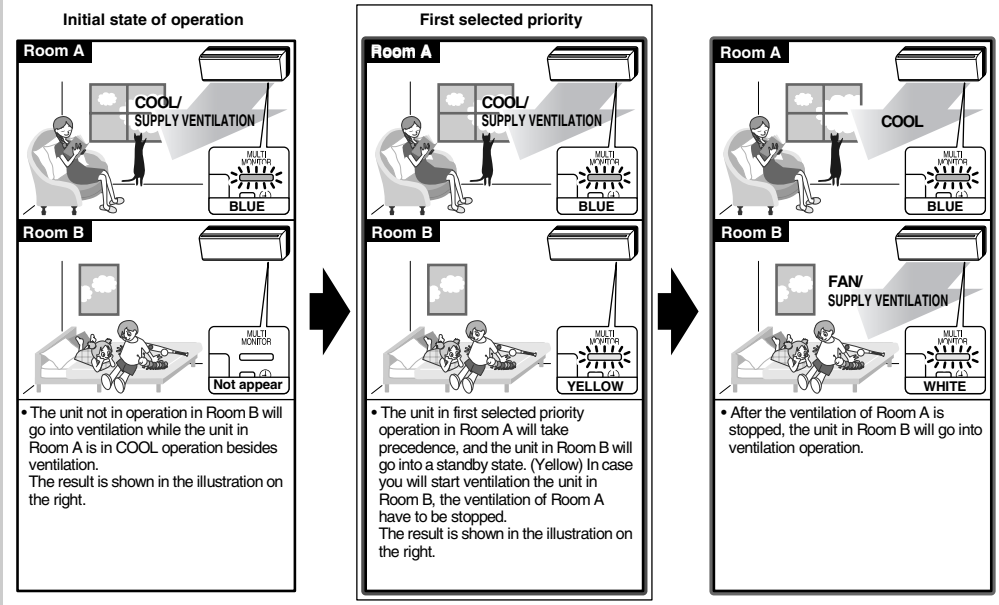


• Fresh air is taken from outdoor through the outdoor unit.
• The outdoor noise and odor may be captured because the outdoor air is taken into the room. The operation noise is slightly louder.
• When the outdoor temperature is higher than room temperature, the airflow rate of FRESH AIR SUPPLY VENTILATION will be low.

14

# 3.6 COMFORT AIRFLOW and INTELLIGENT EYE Operation

## COMFORT AIRFLOW and INTELLIGENT EYE Operation

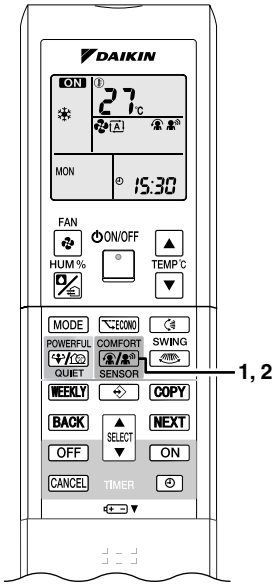


The INTELLIGENT EYE incorporates infrared sensors to detect the presence of people in the conditioned room.
When these sensors detect people, the louvers will adjust the airflow direction to an area where people are not present. When there are no people in the sensing areas, the air conditioner will go into energy-saving mode.

### ■ To start operation

**1. Press "COMFORT/SENSOR" button and select an operation mode.**

- Choose the desired operation mode out of the following sequence.
- Each time the "COMFORT/SENSOR" button is pressed a different setting option is displayed on the LCD.

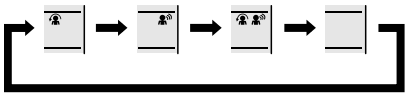

- When the flaps (horizontal blades) are swinging, the operating as above will stop the movement of them.

### ■ To cancel operation

**2. Press "COMFORT/SENSOR" button.**

- Press the button to select "Blank".

| Display | Operation mode | Explanation |
|---|---|---|
| | COMFORT AIRFLOW | The flaps will adjust the airflow direction upward while cooling, and adjust the airflow direction downward while heating. (page 16.) |
| | INTELLIGENT EYE | The sensors will detect the movement of people in the sensing areas and the louvers will adjust the airflow direction to an area where people are not present. When there are no people in the sensing areas, the air conditioner will go into energy-saving mode. (page 16.) |
| | COMFORT AIRFLOW and INTELLIGENT EYE | The air conditioner will be in COMFORT AIRFLOW operation combined with INTELLIGENT EYE operation. (page 16.) |
| Blank | No function | – |

### NOTE

**■ Notes on "COMFORT AIRFLOW operation"**

- The flap position will change, preventing air from blowing directly on the occupants of the room.
- POWERFUL operation and COMFORT AIRFLOW operation cannot be used at the same time.
- The volume of air will be set to AUTO. If the upward and downward airflow direction is selected, the COMFORT AIRFLOW function will be canceled.
- Priority is given to the function of whichever button is pressed last.
- The COMFORT AIRFLOW function makes the following airflow direction adjustments.
  The flaps will move upward while cooling so that the airflow will be directed upward.
  The flaps will move downward while heating so that the airflow will be directed downward.
- COMFORT AIRFLOW operation cannot be selected while FAN operation.

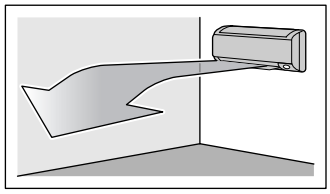

Cooling operation

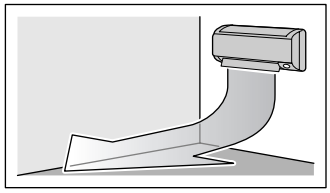

Heating operation

15

# COMFORT AIRFLOW and INTELLIGENT EYE Operation

## "INTELLIGENT EYE" is useful for Energy Saving

■ **Energy saving operation**

- Change the temperature –2°C in heating / +2°C in cooling / +2°C in dry mode from set temperature.
- Decrease the airflow rate slightly in FAN mode only. If no presence detected in the room during 20 minutes.

## NOTE

■ **Notes on "INTELLIGENT EYE operation"**

- The INTELLIGENT EYE sensor according to the following situations.

Vertical angle 90°
(Side View)

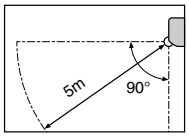


Horizontal angle 110°
(Top View)

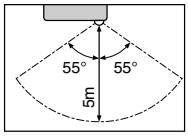


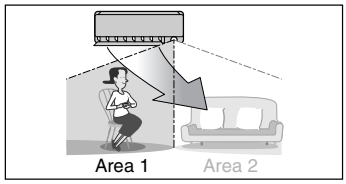


A person is detected in area 1.

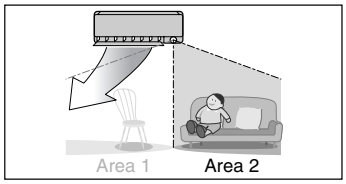


A person is detected in area 2.

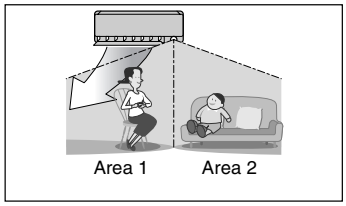


People are detected in both areas.

(Use the INTELLIGENT EYE operation in combination with the COMFORT AIRFLOW operation.)

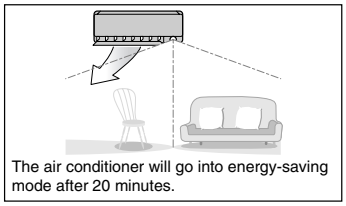


No people are detected in the areas.

*The wind direction may differ from the illustrated direction depending on the actions and movements of the people in the areas.

- While the air conditioner is in INTELLIGENT EYE operation, the louvers will adjust the airflow direction. If there are people in the sensing areas of the INTELLIGENT EYE, the louvers are controlled and airflow direction will be leftward or rightward so that the airflow will not be directed to the people.
  If no people are detected in either area 1 or 2 in 20 minutes, the air conditioner will go into energy-saving mode with the set temperature shifted by 2°C.
  The INTELLIGENT EYE sensor may not detect the people depending on the clothes they are wearing if there are no movements of them in the areas.
- The airflow direction will be leftward if there are people in both areas 1 and 2 or if there is a person right in front of the sensor.
- Because of the position of the sensor, people might be exposed to the airflow of the indoor unit if they are close to the border between areas 1 and 2.
  If there are people close to the border between areas or in both areas, it is recommended to use the COMFORT AIRFLOW and INTELLIGENT EYE functions simultaneously.
  When both of them are in use, flaps and louvers are controlled and the indoor unit will not direct the airflow towards the people.
- Sensor detection sensitivity changes according to indoor unit location, the speed of passersby, temperature range, etc.
- The sensor also mistakenly detects pets, sunlight, fluttering curtains and light reflected off of mirrors as passersby.
- NIGHT SET MODE (page 19.) will not go on during use of INTELLIGENT EYE operation.

## NOTE

■ **To combine "COMFORT AIRFLOW operation" and "INTELLIGENT EYE operation"**

- The air conditioner can go into operation with the COMFORT AIRFLOW and INTELLIGENT EYE functions combined.
  The flaps adjust the airflow direction upward (while in cooling operation) and downward (while in heating operation), during which the sensor of the INTELLIGENT EYE is working to detect the movement of people. When the sensor detects people, the louvers will direct the airflow in such way that it will not be blown directly on them. If there are no people, the air conditioner will go into energy-saving operation after 20 minutes.

## ⚠ CAUTION

- Do not place large objects near the sensor.
  Also keep heating units or humidifiers outside the sensor's detection area. This sensor can detect undesirable objects.
- Do not hit or violently push the INTELLIGENT EYE sensor. This can lead to damage and malfunction.

16

# 3.7 POWERFUL and OUTDOOR UNIT QUIET Operation

## POWERFUL and OUTDOOR UNIT QUIET Operation

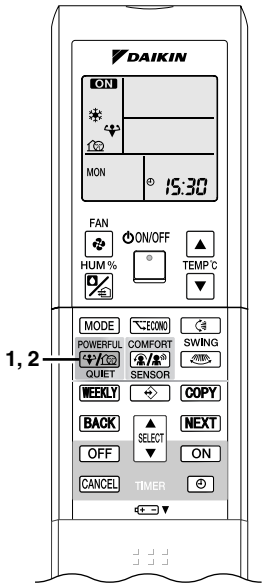


POWERFUL operation quickly maximizes the cooling (heating) effect in any operation mode. You can get the maximum capacity.
OUTDOOR UNIT QUIET operation lowers the noise level of the outdoor unit by changing the frequency and fan speed on the outdoor unit. This function is convenient during night.

### ■ To start operation

**1. Press "POWERFUL and QUIET" button, and select an operation mode.**

- Choose the desired operation mode out of the following sequence.
- Each time the "POWERFUL/QUIET" button is pressed a different setting option is displayed on the LCD.
- Selectable functions vary with each operation mode and the ON/OFF state.
- " " and " " are displayed on the LCD.

**While in operation in AUTO, COOL, HEAT, or HUMID HEATING mode.**

**While in operation in DRY or FAN mode.**

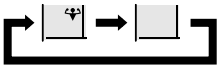

**While not in operation in AUTO, COOL, HEAT, or HUMID HEATING mode.**

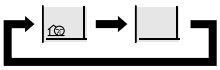

- POWERFUL operation starts in 5 seconds and ends in 20 minutes. Then the system automatically operates again with the previous settings which were used before POWERFUL operation.
- When using POWERFUL operation, there are some functions which are not available.

### ■ To cancel operation

**2. Press "POWERFUL and QUIET" button.**

- Press the button to select "Blank".
- " " and " " are disappears from the LCD.

### NOTE

**■ Note on POWERFUL operation**

- POWERFUL operation cannot be used together with ECONO, QUIET, or COMFORT operation.
  Priority is given to the function of whichever button is pressed last.
- POWERFUL operation can only be set when the unit is running.
  Pressing the operation stop button causes the settings to be canceled, and the " " disappears from the LCD.
- POWERFUL operation will not increase the capacity of the air conditioner if the air conditioner is already in operation with its maximum capacity demonstrated.
- **In COOL and HEAT mode:** To maximize the cooling (heating) effect, the capacity of outdoor unit must be increased and the airflow rate be fixed to the maximum setting. The temperature and airflow settings are not variable.
- **In DRY mode:** The temperature setting is lowered by 2.5°C and the airflow rate is slightly increased.
- **In AUTO mode:** The temperature can be changed only in powerful auto operation.
- **In FAN mode:** The airflow rate is fixed to the maximum setting.
- **In HUMID HEAT mode:** The operation mode changes to HEAT mode.

**■ Note on OUTDOOR UNIT QUIET operation**

- This function is available in COOL, HEAT, and AUTO modes. (This is not available in FAN and DRY mode.)
- POWERFUL operation and OUTDOOR UNIT QUIET operation cannot be used at the same time.
  Priority is given to the function of whichever button is pressed last.
- OUTDOOR UNIT QUIET operation will drop neither the frequency nor fan speed if the frequency and fan speed have been already dropped low enough.

17

# 3.8 ECONO Operation

## ECONO Operation

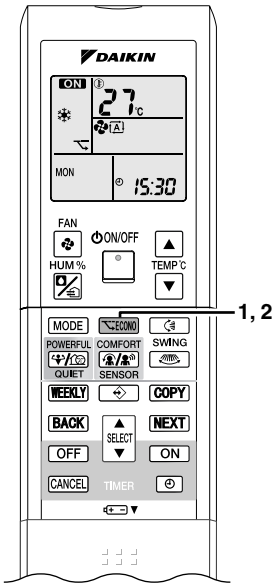


ECONO operation is a function which enables efficient operation by limiting the maximum power consumption value.
This function is useful for cases in which attention should be paid to ensure a circuit breaker will not trip when the product runs alongside other appliances.

### ■ To start ECONO operation

**1. Press "ECONO" button.**

- " " is displayed on the LCD.

### ■ To cancel ECONO operation

**2. Press "ECONO" button again.**

- " " disappears from the LCD.

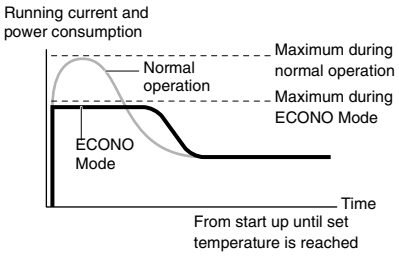


- This diagram is a representation for illustrative purposes only.
- The maximum running current and power consumption of the air conditioner in ECONO mode vary with the connecting outdoor unit.

### NOTE

- ECONO operation can only be set when the unit is running. Pressing the OFF button causes the setting to be canceled, and the " " disappears from the LCD.
- ECONO operation is a function which enables efficient operation by limiting the power consumption of the outdoor unit (operating frequency).
- ECONO operation functions in AUTO, COOL, DRY and HEAT modes.
- In case ECONO operation is selected in QUIET operation, QUIET operation will be canceled.
- POWERFUL and ECONO operation cannot be used at the same time.
  Priority is given to the function of whichever button is pressed last.
- Power consumption may not drop even if ECONO operation is used of the level of power consumption is already low.

18

# 3.9 TIMER Operation

## TIMER Operation

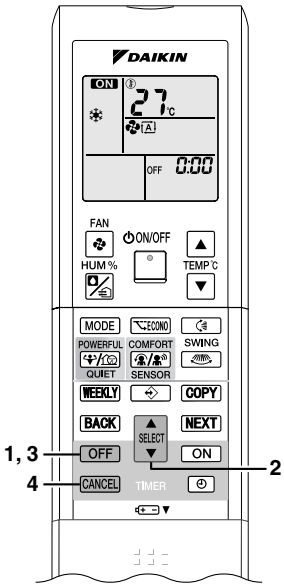


Timer functions are useful for automatically switching the air conditioner on or off at night or in the morning. You can also use OFF TIMER and ON TIMER in combination.

### ■ To use OFF TIMER operation

• Check that the clock is correct.
If not, set the clock to the present time.

**1. Press "OFF TIMER" button.**

• " 0:00 " is displayed.
• " OFF " blinks.
• " ⏲ " and day of the week disappears from LCD.

**2. Press "SELECT" button until the time setting reaches the point you like.**

• Every pressing of either button increases or decreases the time setting by 10 minutes.
Holding down either button changes the setting rapidly.

**3. Press "OFF TIMER" button again.**

• " OFF " and setting time are displayed on the LCD.
• The TIMER lamp lights up.

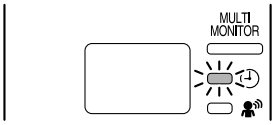


### ■ To cancel the OFF TIMER operation

**4. Press "CANCEL" button.**

• " OFF " and setting time disappears from LCD.
• " ⏲ " and day of the week are displayed on the LCD.
• The TIMER lamp goes off.

**NOTE**

• When TIMER is set, the present time is not displayed.
• Once you set ON, OFF TIMER, the time setting is kept in the memory. (The memory is canceled when remote controller batteries are replaced.)
• When operating the unit via the ON/OFF TIMER, the actual length of operation may vary from the time entered by the user. (Maximum approx. 10 minutes)

■ **NIGHT SET MODE**
When the OFF TIMER is set, the air conditioner automatically adjusts the temperature setting (0.5°C up in COOL, 2.0°C down in HEAT) to prevent excessive cooling (heating) for your pleasant sleep.

19

# TIMER Operation

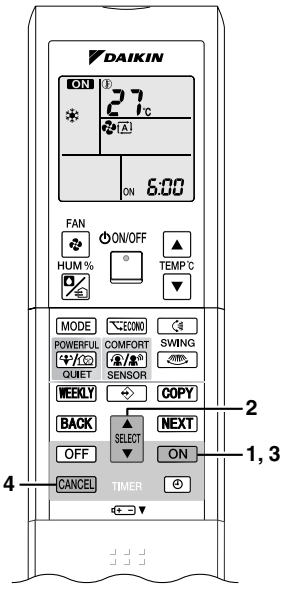


## ■ To use ON TIMER operation

• Check that the clock is correct.
If not, set the clock to the present time.

### 1. Press "ON TIMER" button.

• " 6:00 " is displayed.
• " ON " blinks.
• " ⏲ " and day of the week disappears from LCD.

### 2. Press "SELECT" button until the time setting reaches the point you like.

• Every pressing of either button increases or decreases the time setting by 10 minutes.
Holding down either button changes the setting rapidly.

### 3. Press "ON TIMER" button again.

• " ON " and setting time are displayed on the LCD.
• The TIMER lamp lights up.

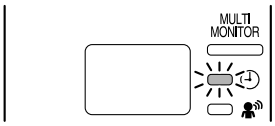


## ■ To cancel ON TIMER operation

### 4. Press "CANCEL" button.

• " ON " and setting time disappears from LCD.
• " ⏲ " and day of the week are displayed on the LCD.
• The TIMER lamp goes off.

## ■ To combine ON TIMER and OFF TIMER

• A sample setting for combining the two timers is shown below.

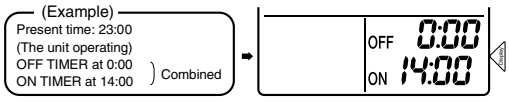


## ATTENTION

■ **In the following cases, set the timer again**
• After a breaker has turned OFF.
• After a power failure.
• After replacing batteries in the remote controller.

20

# 3.10 WEEKLY TIMER Operation

## WEEKLY TIMER Operation

Up to 4 timer settings can be saved for each day of the week. It is convenient if the WEEKLY TIMER is set according to the family's life style.

### ■ Using in these cases of WEEKLY TIMER

An example of WEEKLY TIMER settings is shown below.

**Example:** The same timer settings are made for the week from Monday through Friday while different timer settings are made for the weekend.

| | |
|---|---|
| **[Monday]** | Make timer settings up to programs 1-4. (page 22.)<br> 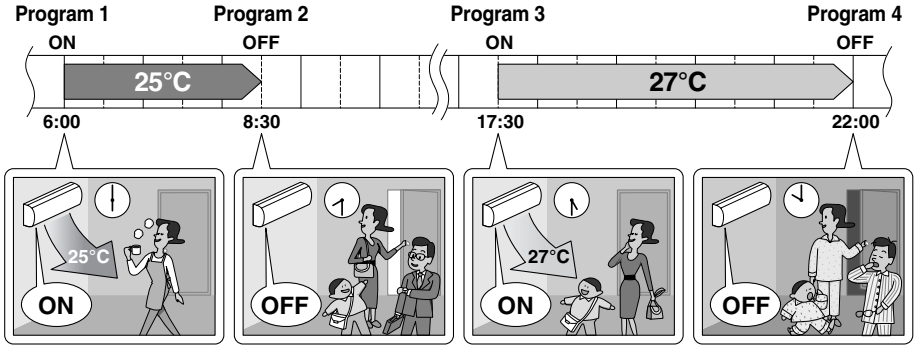 <br> |
| **[Tuesday] to [Friday]** | Use the copy mode to make settings for Tuesday to Friday, because these settings are the same as those for Monday. (page 24.)<br> 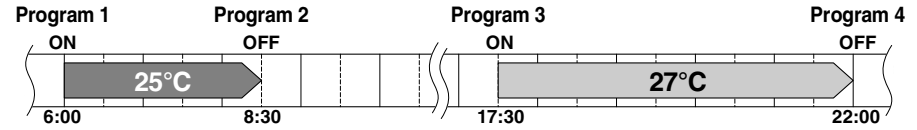 <br> |
| **[Saturday]** | No timer settings |
| **[Sunday]** | Make timer settings up to programs 1-4. (page 22.)<br> 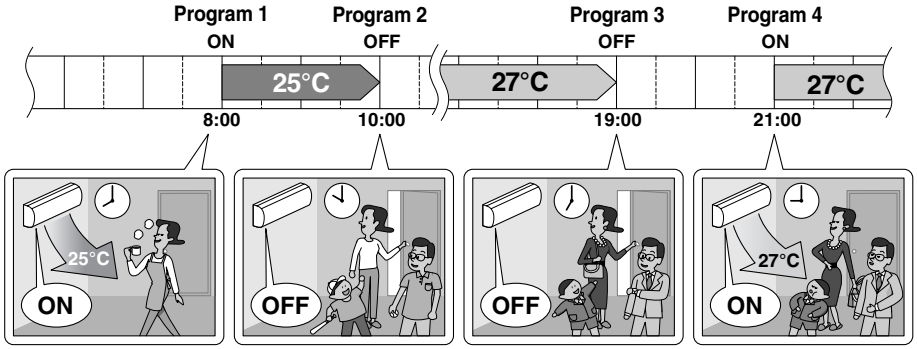 <br> |

- Up to 4 reservations per day and 28 reservations per week can be set in the WEEKLY TIMER. The effective use of the copy mode ensures ease of making reservations.
- The use of ON-ON-ON-ON settings, for example, makes it possible to schedule operating mode and set temperature changes. Furthermore, by using OFF-OFF-OFF-OFF settings, only the turn-OFF time of each day can be set. This will turn OFF the air conditioner automatically if the user forgets to turn it OFF.

21

# WEEKLY TIMER Operation

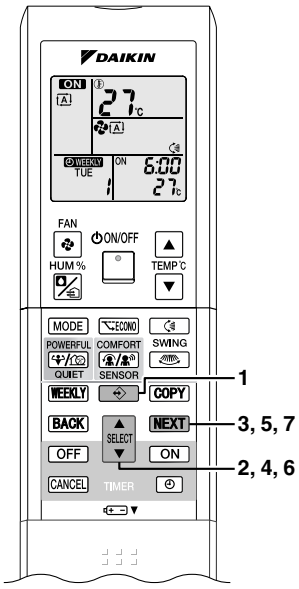


## ■ To use WEEKLY TIMER operation

**Setting mode**

• Make sure the day of the week and time are set. If not, set the day of the week and time.

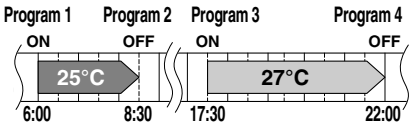


**Setting Displays**

Day and number settings | ON/OFF settings | Time settings | Temperature settings

### 1. Press "PROGRAM" button.

• The day of the week and the reservation number of the current day will be displayed.
• Programs 1-4 settings can be made per day.

### 2. Press "SELECT" button to select the desired day of the week and reservation number.

• Pressing the "SELECT" button changes the reservation number and the day of the week.

### 3. Press "NEXT" button.

• The day of the week and reservation number will be set.
• " WEEKLY " and " **ON** " blink.

### 4. Press "SELECT" button to select the desired mode.

• Pressing the "SELECT" button changes " **ON** " or " **OFF** " setting in sequence.

• In case the reservation has already been set, selecting "blank" deletes the reservation.
• Go to STEP **9** if "blank" is selected.

### 5. Press "NEXT" button.

• The ON/OFF TIMER mode will be set.
• " WEEKLY " and the time blink.

### 6. Press "SELECT" button to select the desired time.

• The time can be set between 0:00 and 23:50 in 10 minute intervals.
• To return to the ON/OFF TIMER mode setting, press "BACK" button.
• Go to STEP **9** when setting the OFF TIMER.

### 7. Press "NEXT" button.

• The time will be set.
• " WEEKLY " and the temperature blink.

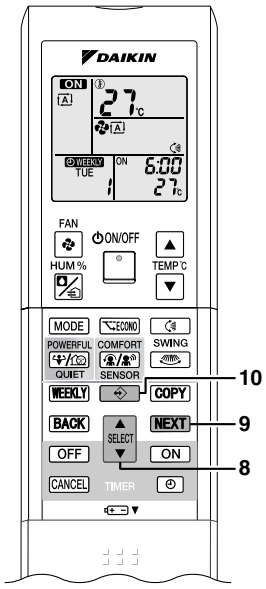


## 8. Press "SELECT" button to select the desired temperature.

- The temperature can be set between 10°C and 32°C.
  Cooling: The unit operates at 18°C even if it is set at 10 to 17°C.
  Heating: The unit operates at 30°C even if it is set at 31 to 32°C.
- To return to the time setting, press "BACK" button.
- The set temperature is only displayed when setting the ON TIMER.

## 9. Press "NEXT" button.

- The temperature will be set and go to the next reservation setting.
- To continue further settings, repeat the procedure from STEP **4**.

## 10. Press "PROGRAM" button to complete the setting.

- Be sure to direct the remote controller toward the indoor unit and check for a receiving tone and flashing the operation lamp.
- " WEEKLY " is displayed on the LCD and WEEKLY TIMER operation is activated.
- The TIMER lamp lights up.

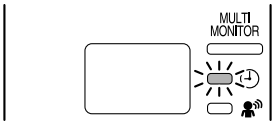


- A reservation made once can be easily copied and the same settings used for another day of the week.
  Refer to Copy mode. (page 24.)

## NOTE

■ **Notes on WEEKLY TIMER operation**

- Do not forget to set the time on the remote controller first.
- The day of the week, ON/OFF TIMER mode, time and set temperature (only for ON TIMER mode) can be set with WEEKLY TIMER. Other settings for ON TIMER are based on the settings just before the operation.
- Both WEEKLY TIMER and ON/OFF TIMER operation cannot be used at the same time. The ON/OFF TIMER operation has priority if it is set while WEEKLY TIMER is still active. WEEKLY TIMER is activated after the reserved ON/OFF TIMER operation is completed.
- Only the time and set temperature set with the weekly timer are sent with the "PROGRAM" button. Set the weekly timer only after setting the operation mode, the fan strength, and the fan direction ahead of time.
- Shutting the breaker off, power failure, and other similar events will render operation of the indoor unit's internal clock inaccurate. Reset the clock.
- The "BACK" button can be used only for the ON/OFF TIMER mode and time settings. It cannot be used to go back to the reservation number.

# WEEKLY TIMER Operation

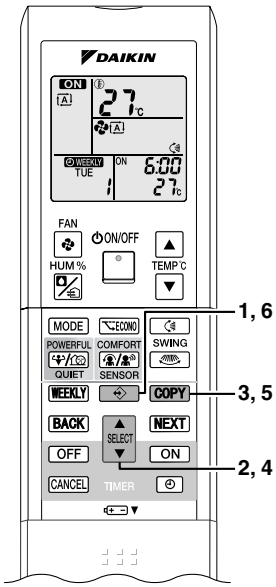


## Copy mode

- A reservation made once can be copied another day of the week. The whole reservation of the selected day of the week will be copied.

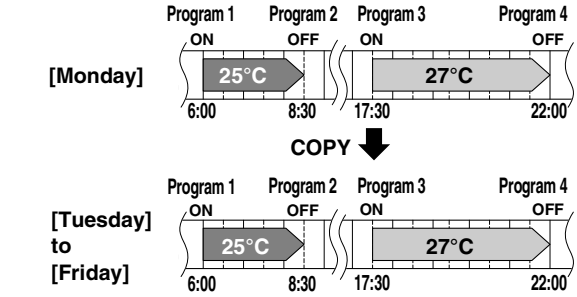


**Setting Displays**

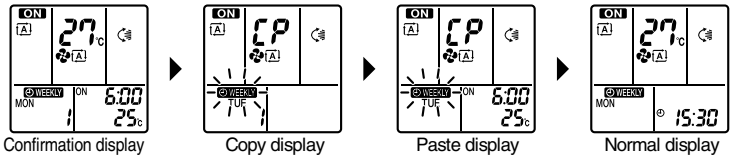


1. **Press "PROGRAM" button.**
2. **Press "SELECT" button to confirm the day of the week to be copied.**
3. **Press "COPY" button.**
   - This activates copy mode.
   - The whole reservation of the selected day of the week will be copied.
4. **Press "SELECT" button to select the destination day of the week.**
5. **Press "COPY" button.**
   - The reservation will be copied to the selected day of the week.
   - To continue copying the settings to other days of the week, repeat STEP **4** and STEP **5**.
6. **Press "PROGRAM" button to complete the setting.**
   - Exit copy mode.
   - " WEEKLY " is displayed on the LCD and WEEKLY TIMER operation is activated.

## NOTE

■ **COPY MODE**

- The entire reservation of the source day of the week is copied in the copy mode. Detailed settings can be made after the copy is completed.

24

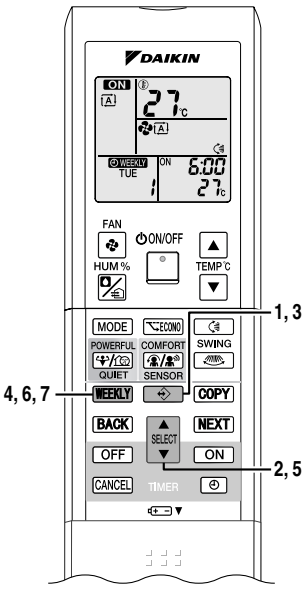


## ■ Confirming a reservation

• The reservation can be confirmed.

**Setting Displays**

Normal display Confirmation display

**1. Press "PROGRAM" button.**

• The day of the week and the reservation number of the current day will be displayed.

**2. Press "SELECT" button to select the day of the week and the reservation number to be confirmed.**

• Pressing the "SELECT" button displays the reservation details.

**3. Press "PROGRAM" button.**

• Exit confirming mode.
• " WEEKLY " is displayed on the LCD and WEEKLY TIMER operation is activated.
• The TIMER lamp lights up.

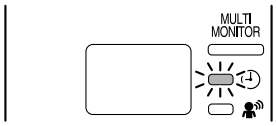


## ■ To deactivate WEEKLY TIMER operation

**4. Press "WEEKLY" button while " WEEKLY " is displayed on the LCD.**

• The " WEEKLY " will disappear from the LCD.
• The TIMER lamp goes off.
• To reactivate the WEEKLY TIMER operation, press the "WEEKLY" button again.
• If a reservation deactivated with "WEEKLY" button is activated once again, the last reservation mode will be used.

## ■ To delete reservations

### The individual reservation

• Refer to Setting mode . (page 22.)
When selecting desired mode at STEP **4** in setting mode, select "blank". The reservation will be deleted.

### The reservations for each day of the week

• This function can be used for deleting reservations for each day of the week.
• It can be used while confirming or setting reservations.

**5. Press "SELECT" button to select the day of the week to be deleted.**

**6. Hold the "WEEKLY" button for 5 seconds.**

• The reservation of the selected day of the week will be deleted.

### All reservations

**7. Hold the "WEEKLY" button for 5 seconds.**

• Be sure to direct the remote controller toward the indoor unit and check for a receiving tone.
• This operation is not effective while WEEKLY TIMER is being set.
• All reservations will be deleted.

# 3.11 Note for Multi System

## Note for Multi System

### 〈〈 What is a "Multi System"? 〉〉

This system has one outdoor unit connected to multiple indoor units.

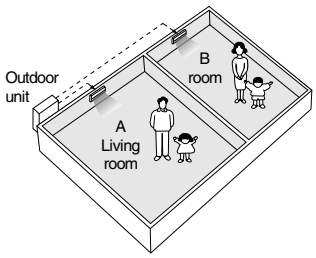


### ■ Selecting the operation mode

#### 1. With the Priority Room Setting present but inactive or not present.

When more than one indoor unit is operating, priority is given to the first unit that was turned on. In this case, set the units that are turned on later to the same operation mode (*1) as the first unit. Otherwise, they will enter the Standby Mode, and the operation lamp will flash; this does not indicate malfunction.

(*1)

- COOL, DRY and FAN mode may be used at the same time.
- AUTO mode automatically selects COOL mode or HEAT mode based on the room temperature. Therefore, AUTO mode is available when selecting the same operation mode as that of the room with the first unit to be turned on.

〈**CAUTION**〉

Normally, the operation mode in the room where the unit is first run is given priority, but the following situations are exceptions, so please keep this in mind.
If the operation mode of the first room is **FAN Mode**, then using **HEAT Mode** in any room after this will give priority to **HEAT**.
In this situation, the air conditioner running in FAN Mode will go on standby, and the operation lamp will flash.

### ■ HUMID HEAT operation/FRESH AIR SUPPLY VENTILATION

- When the indoor units in both 2 rooms are set to HUMID HEAT operation/FRESH AIR SUPPLY VENTILATION, the indoor unit in either 1 of the room operate HUMID HEAT operation/FRESH AIR SUPPLY VENTILATION.
  (The indoor units in both 2 rooms do not simultaneously go into HUMID HEAT operation/FRESH AIR SUPPLY VENTILATION.)
  Priority is given to the indoor unit in either one of the rooms with the mode selected earlier. The indoor unit in the other room with mode selected later will change its state according to the operation mode with humidifying operation/ventilation settings. Refer to the following examples 1 through 4. Neither one of the indoor units cannot go into humidifying operation/ventilation while the indoor units are in a standby state. (Refer to the information on selecting operation mode.)

#### 1. When the indoor units in both 2 rooms are set to HUMID HEAT operation.

1) Priority will be given to the indoor unit in the first selected room, and the indoor unit will go into humidifying operation while the indoor unit in the second selected room will go into a humidifying operation standby state.
   The multi-monitor indicator will be lit yellow in approx. 20 seconds.
2) When the humidity of the first selected room reaches a target level, the indoor unit will go into a humidifying operation standby state. Then the indoor unit in the other room will go into HUMID HEAT operation automatically.
3) When the humidity of the first selected room drops, the indoor unit of the room will return to HUMID HEAT operation. At that time, the indoor unit in the second selected room will go into a humidifying operation standby state.
   - When the indoor unit in the first selected room is in "CONT" humidifying the indoor unit of the second selected room will not switch automatically.

#### 2. When the indoor unit in the first selected room is in HUMID HEAT operation and the indoor unit in the second selected room is in FRESH AIR SUPPLY VENTILATION.

1) When the HUMID HEAT operation of the indoor unit in the first selected room stops, the ventilation of the second selected room will start.
   - Even though the humidity of first selected room reaches a target level, the ventilation of the second selected room will not start unless the HUMID HEAT operation of the indoor unit in the first selected room stops.

#### 3. When the indoor unit in the first selected room is in FRESH AIR SUPPLY VENTILATION and the indoor unit in the second selected room is in HUMID HEAT operation.

1) When the ventilation of the first selected room stops, the humidifying operation of the second selected room will start.
   - The humidifying operation of the second selected room will not start unless the ventilation of the first selected room stops.

#### 4. When the indoor units in both 2 rooms are set to FRESH AIR SUPPLY VENTILATION.

1) Priority will be given to the indoor unit in the first selected room, and the indoor unit in the second selected room will be in a ventilation standby state. At that time, no automatic switching explained in **1** will be possible. The ventilation of the second selected room will start after the ventilation of the first selected room stops.

# Part 6
# Service Diagnosis


1. Service Check Function .....103
   1.1 Failure Diagnosis with Multi-Colored Indicator Lamp .....103
   1.2 Failure Diagnosis by LED Indication .....103
   1.3 Failure Diagnosis by Remote Controller.....104
2. Troubleshooting .....107
   2.1 Error Code Indication by Remote Controller .....107
   2.2 Air conditioner does not run. .....109
   2.3 Air conditioner runs but does not cool (heat).....112
   2.4 When operation starts, safety breaker works. .....114
   2.5 Air conditioner makes big noise and vibration. .....116
   2.6 Air is not humidified enough. .....117
   2.7 Indoor Unit PCB Abnormality .....120
   2.8 Freeze-up Protection Control or Heating Peak-cut Control.....121
   2.9 Fan Motor (DC Motor) or Related Abnormality.....123
   2.10 Thermistor or Related Abnormality (Indoor Unit).....125
   2.11 Humidity Sensor Abnormality .....126
   2.12 Signal Transmission Error (Indoor Unit - Outdoor Unit) .....127
   2.13 Incompatible Power Supply between Indoor Unit and Outdoor Unit ....129
   2.14 Incomplete Setting for Hose Length .....130
   2.15 Freeze-up Protection in Other Rooms / Unspecified Voltage (between Indoor and Outdoor Units) .....131
   2.16 Outdoor Unit PCB Abnormality.....132
   2.17 OL Activation (Compressor Overload) .....133
   2.18 Compressor Lock .....134
   2.19 DC Fan Lock .....135
   2.20 Input Overcurrent Detection .....136
   2.21 Discharge Pipe Temperature Control.....138
   2.22 High Pressure Control in Cooling .....139
   2.23 Compressor Sensor System Abnormality .....141
   2.24 Damper Abnormality.....142
   2.25 Position Sensor Abnormality .....143
   2.26 DC Voltage / DC Current Sensor Abnormality .....145
   2.27 Thermistor or Related Abnormality (Outdoor Unit).....146
   2.28 Abnormal Temperature in Electrical Box.....148
   2.29 Temperature Rise in Radiation Fin.....150
   2.30 Output Overcurrent.....152
   2.31 Refrigerant Shortage .....154
   2.32 Over Voltage Protection / Low Voltage Protection .....156
   2.33 Outdoor Unit PCB Abnormality or Communication Circuit Abnormality .....157
   2.34 Signal Transmission Error on Outdoor Unit PCB .....160
   2.35 Fan Motor System Abnormality / Fan Lock .....162
   2.36 Heater Wire Abnormality .....163
   2.37 Humidifying Fan Outlet Thermistor Abnormality / Heater Temperature Abnormality.....165

2.38 Lights-out of Microcomputer Status Lamp.....167
3. Check.....168
3.1 Fan Motor Connector Output Check.....168
3.2 Thermistor Resistance Check.....169
3.3 Installation Condition Check.....170
3.4 Outdoor Fan System Check (DC Motor).....170
3.5 Power Supply Waveform Check.....171
3.6 Main Circuit Electrolytic Capacitor Check.....171
3.7 Refrigerant System Check.....172
3.8 “Inverter Checker” Check.....173
3.9 Power Transistor Check.....174
3.10 Discharge Pressure Check.....175
3.11 Electronic Expansion Valve Check.....176
3.12 Rotating Pulse Input on Outdoor Unit PCB Check.....177
3.13 Main Circuit Short Check.....179
3.14 Four Way Valve Performance Check.....180

# 1. Service Check Function

## 1.1 Failure Diagnosis with Multi-Colored Indicator Lamp

The multi-colored indicator lamp on the display of the indoor unit flashes when any of the following failure is detected.

1. When a protection device of the indoor or outdoor unit is activated or when the thermistor malfunctions and the unit does not work.
2. When a signal transmission error occurs between the indoor and outdoor units.

For detailed troubleshooting, refer to the following pages “Troubleshooting” (P.107~).

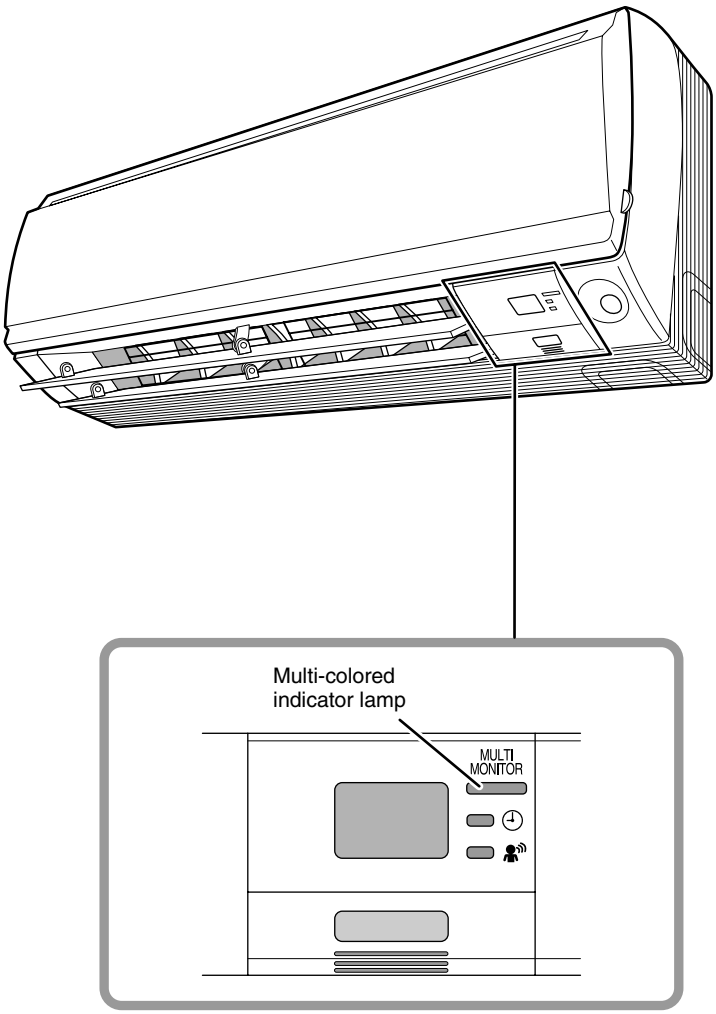


(R9419)

## 1.2 Failure Diagnosis by LED Indication

The following failure diagnosis can be done by LED indication on the outdoor unit PCB.

1. The outdoor unit has a green LED(LED A) on the PCB. (Refer to page 11.)
   The flashing green LED indicates "in order" condition.
   The turned ON or OFF LED indicates the failure related to the microcomputer.

- PCB is set upside down (with backside up).
- LED A can be visually inspected through a inspection slit.

# 1.3 Failure Diagnosis by Remote Controller

**Check Method 1**

1. When the timer cancel button is held down for 5 seconds, "00" indication flashes on the temperature display section.

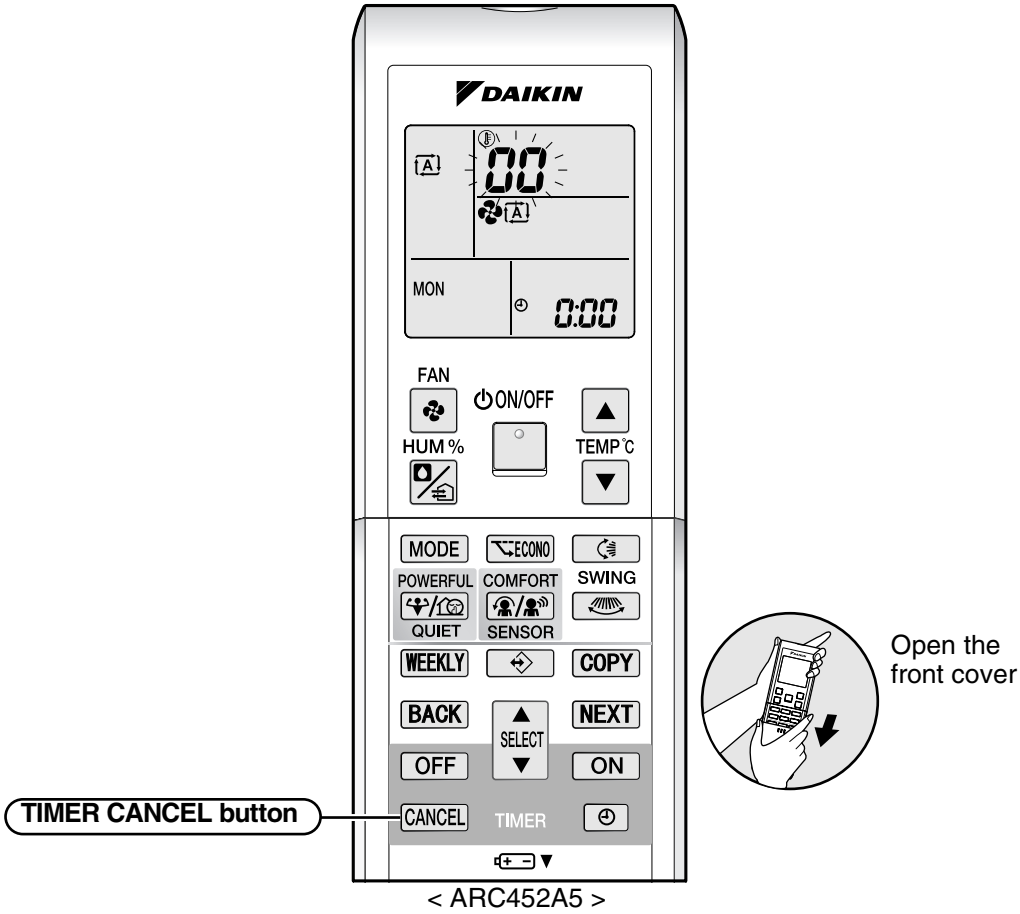


2. Press the timer cancel button repeatedly until a continuous beep is produced.

■ The code indication changes in the sequence shown below, and notifies with a long beep.

| No. | Code | No. | Code | No. | Code |
|---|---|---|---|---|---|
| 1 | 00 | 13 | C7 | 25 | UA |
| 2 | U4 | 14 | A3 | 26 | UH |
| 3 | L5 | 15 | H8 | 27 | P4 |
| 4 | E6 | 16 | H9 | 28 | L3 |
| 5 | H6 | 17 | C9 | 29 | L4 |
| 6 | H0 | 18 | C4 | 30 | H7 |
| 7 | A6 | 19 | C5 | 31 | U2 |
| 8 | E7 | 20 | J3 | 32 | EA |
| 9 | U0 | 21 | J6 | 33 | AH |
| 10 | F3 | 22 | E5 | 34 | FA |
| 11 | A5 | 23 | A1 | 35 | H1 |
| 12 | F6 | 24 | E1 | 36 | P9 |

**Note:**

1. A short beep and two consecutive beeps indicate non-corresponding codes.
2. To cancel the code display, hold the timer cancel button down for 5 seconds. The code display also cancels itself if the button is not pressed for 1 minute.

## Check Method 2

1. Press the 3 buttons (TEMP▲, TEMP▼, MODE) simultaneously.

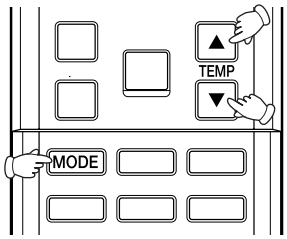

(R8381)

"SC" is displayed on the LCD.

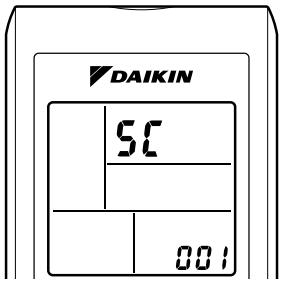

(R9420)

2. Select "SC" with the TEMP▲ or ▼ button.

3. Press the MODE button to enter the service check mode.
   The figure of the ten's place blinks.

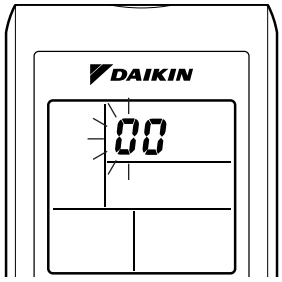

(R9430)

4. Press the TEMP▲ or ▼ button and change the figure until you hear the sound of "beep" or "pi pi".

5. Diagnose by the sound.
   ★"pi" : The figure of the ten's place does not accord with the error code.
   ★"pi pi" : The figure of the ten's place accords with the error code but the one's not.
   ★"beep" : The both figures of the ten's and one's place accord with the error code.
   (→See 7.)

6. Press the MODE button.
   The figure of the one's place blinks.

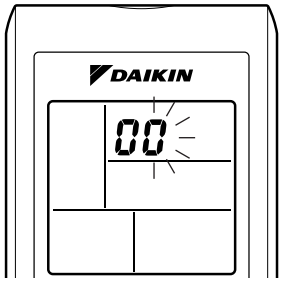

(R9429)

7. Press the TEMP▲ or ▼ button and change the figure until you hear the sound of “beep”.

8. Diagnose by the sound.
   ★“pi” : The figure of the ten’s place does not accord with the error code.
   ★“pi pi” : The figure of the ten’s place accords with the error code but the one’s not.
   ★“beep” : The both figures of the ten’s and one’s place accord with the error code.
   (→See 7.)

9. Determine the error code.
   The figures indicated when you hear the “beep” sound are error code.
   (Error codes and description → Refer to page 107.)

10. Press the MODE button for 5 seconds to exit from the service check mode.
    (When the remote controller is left untouched for 60 seconds, it returns to the normal mode also.)

# 2. Troubleshooting

## 2.1 Error Code Indication by Remote Controller

* Various cases may be possible.

| Code | Unit | Description | Reference page |
|---|---|---|---|
| Basic Failure Diagnosis | | Air conditioner does not run. | 109 |
| | | Air conditioner runs but does not get cooling (heating). | 112 |
| | | When operation starts, safety breaker works. | 114 |
| | | Air conditioner makes big noise and vibration. | 116 |
| | | Air does not humidified enough. | 117 |
| A1 | Indoor | Indoor unit PCB abnormality | 120 |
| A5 | | Freeze-up protection or heating peak-cut control | 121 |
| A6 | | Fan motor or related abnormality | 123 |
| C4 | | Indoor heat exchanger thermistor abnormality | 125 |
| C9 | | Room temperature thermistor abnormality | 125 |
| CC | | Humidity sensor abnormality | 126 |
| E1 | Outdoor | Outdoor unit PCB abnormality | 132 |
| E5 | | OL activation (compressor overload) | 133 |
| E6 | | Compressor lock | 134 |
| E7 | | DC fan lock | 135 |
| E8 | | Input overcurrent detection | 136 |
| F3 | | Discharge pipe temperature control | 138 |
| F6 | | High pressure control in cooling | 139 |
| H0 | | Compressor sensor system abnormality | 141 |
| H1 | Humidifying unit | Damper abnormality | 142 |
| H6 | Outdoor | Position sensor abnormality | 143 |
| H8 | | DC voltage / DC current sensor abnormality | 145 |
| H9 | | Outdoor air thermistor abnormality | 146 |
| J3 | | Discharge pipe thermistor abnormality | 146 |
| J6 | | Outdoor heat exchanger thermistor abnormality | 146 |
| J8 | | Liquid pipe thermistor abnormality | 146 |
| J9 | | Gas pipe thermistor abnormality | 146 |
| L3 | | Abnormal temperature in electrical box | 148 |
| L4 | | Temperature rise in radiation fin | 150 |
| L5 | | Output overcurrent | 152 |
| P4 | | Radiation fin thermistor abnormality | 146 |
| P9 | Humidifying unit | Fan motor system abnormality / fan lock | 162 |
| PA | | Heater wire abnormality | 163 |
| PH | | Humidification fan outlet thermistor abnormality / abnormal heater temperature | 165 |
| U0 | System | Refrigerant shortage | 154 |
| U2 | | Over voltage protection (OVP) / low voltage protection (LVP) | 156 |
| U4 | | Signal transmission error (indoor unit - outdoor unit) | 127 |
| | Outdoor | Outdoor unit PCB abnormality or communication circuit abnormality | 157 |
| U7 | System | Signal transmission error on outdoor unit PCB | 160 |
| U8 | | Incompatible power supply between indoor unit and outdoor unit | 129 |
| | Indoor | Incomplete setting for hose length | 130 |

| Code | Unit | Description | Reference page |
|---|---|---|---|
| UA, UH | System | Freeze-up protection in other rooms / unspecified voltage (between indoor and outdoor units) | 131 |
| – | | Lights-out of microcomputer status lamp | 167 |

## 2.2 Air conditioner does not run.

**Method of Malfunction Detection**

**Malfunction Decision Conditions**

**Supposed Causes**

- Power supply is OFF
- Improper power supply voltage
- Improper connection of wire
- Incorrect combination of indoor unit and outdoor unit
- Battery shortage of remote controller
- Invalid address setting
- Protection device works
  (dirty air filter, refrigerant shortage, over filling, mixed air, etc.)
- Transmission error between indoor unit and outdoor unit
  (Defective PCB on outdoor unit)

## Troubleshooting

**Caution** Be sure to turn off power switch before connect or disconnect connector, or parts damage may be occurred.

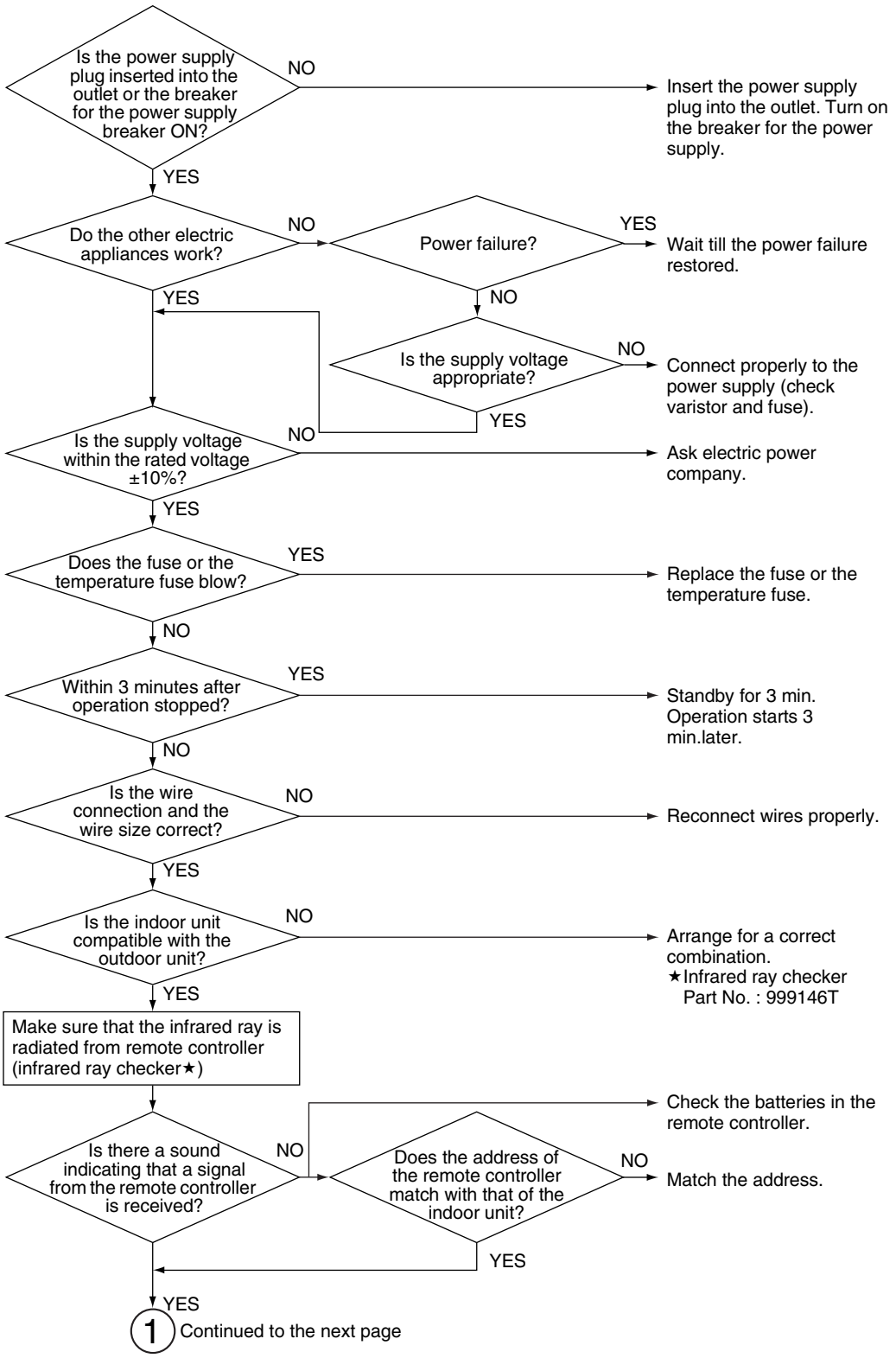


(R9681)

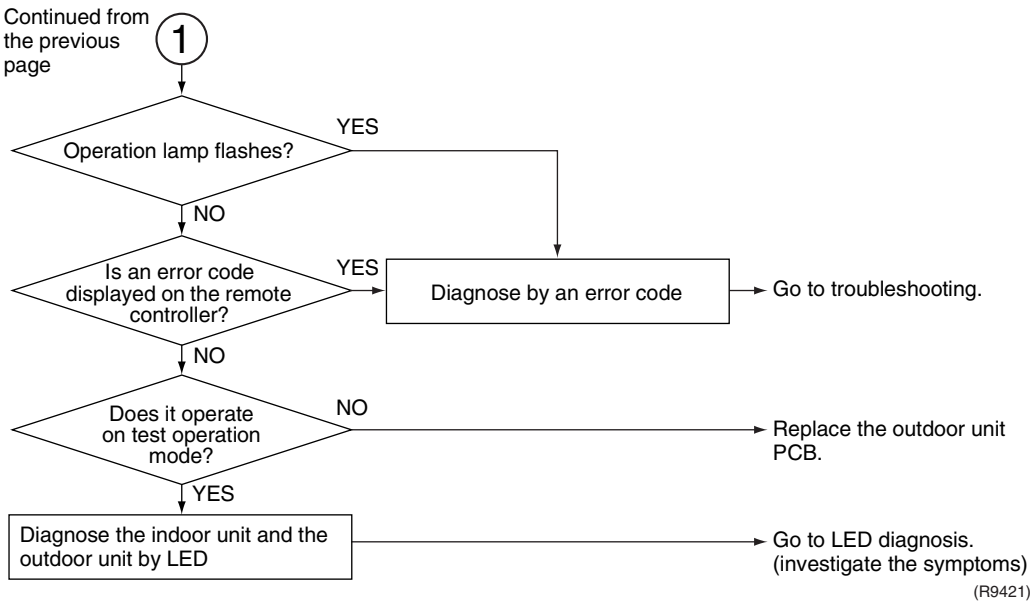
Continued from the previous page
1
Operation lamp flashes?
YES
NO
Is an error code displayed on the remote controller?
YES
Diagnose by an error code
Go to troubleshooting.
NO
Does it operate on test operation mode?
NO
Replace the outdoor unit PCB.
YES
Diagnose the indoor unit and the outdoor unit by LED
Go to LED diagnosis. (investigate the symptoms)
(R9421)

## 2.3 Air conditioner runs but does not cool (heat).

**Method of Malfunction Detection**

**Malfunction Decision Conditions**

**Supposed Causes**

- Incorrect temperature setting
- Incorrect combination of indoor unit and outdoor unit
- Blocked air filter
- Insufficient power
- Refrigerant piping is too long
- Improper setting of piping length
- Defective field piping (squeezed, etc.)

## Troubleshooting

**Check No.02**
**Refer to P.169**

**Caution** Be sure to turn off power switch before connect or disconnect connector, or parts damage may be occurred.

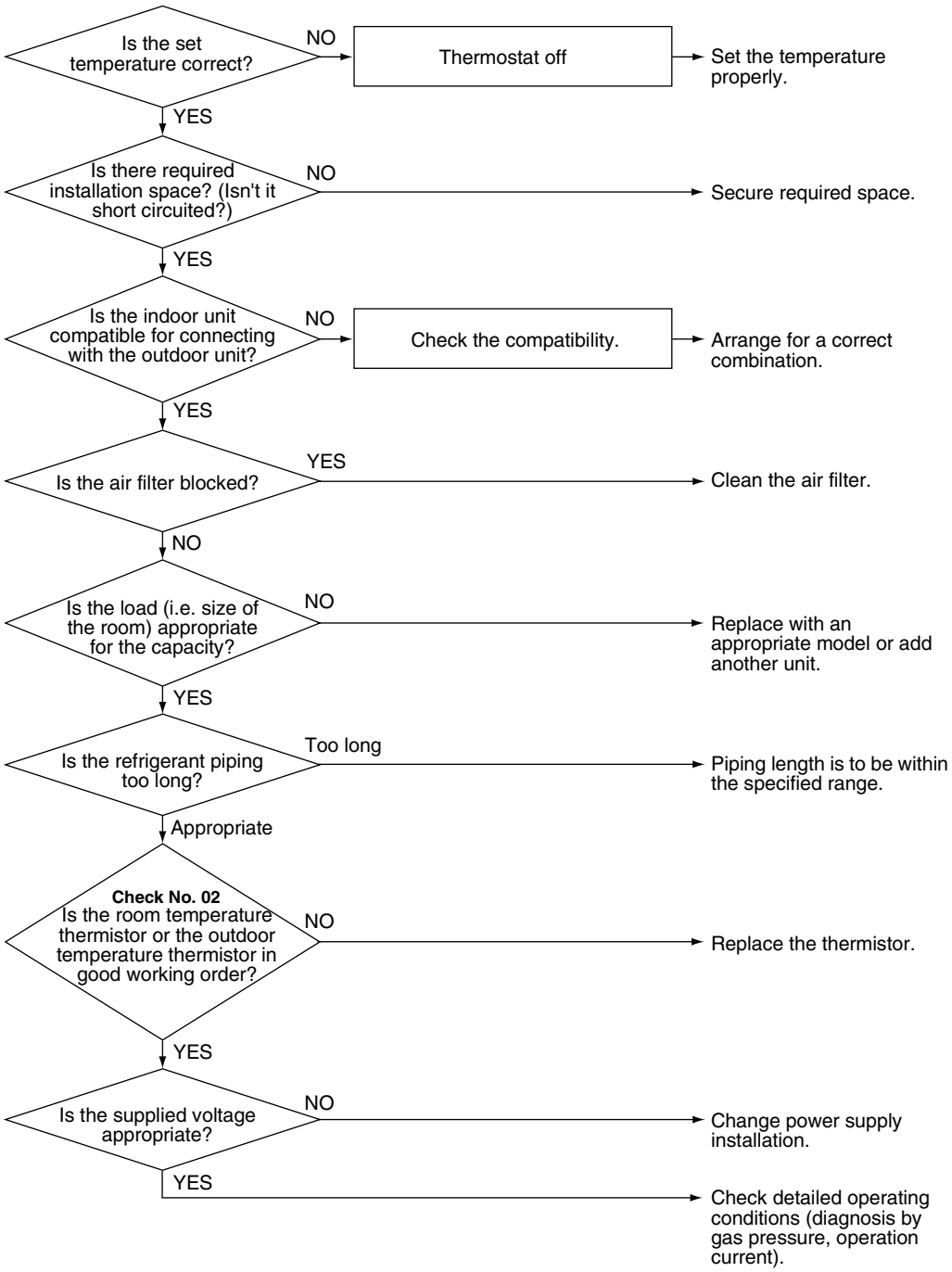


**Warning:** When an air conditioner does not cool or heat the room, refrigerant leak is considered to be one of the reasons.
Make sure that there is no refrigerant leakage or breaks due to over tightened flare part.
(Though the refrigerant used in an air conditioner is itself harmless, but it can generate toxic gases when it leaks into room and contacts flames, such as fan and other heaters, stoves, and ranges. In case of leakage, ventilate the room immediately.)

## 2.4 When operation starts, safety breaker works.

**Method of Malfunction Detection**

**Malfunction Decision Conditions**

**Supposed Causes**

- Insufficient capacity of safety breaker
- Earth leakage breaker is too sensitive
- Not exclusive circuit
- The supply voltage is not within rated voltage ±10%.
- The size of connecting wire is thin (indoor power supply unit)
- Air is mixed (over filling)
- Damaged outdoor unit PCB (short circuit)

## Troubleshooting

**Check No.29**
**Refer to P.179**

**Caution** Be sure to turn off power switch before connect or disconnect connector, or parts damage may be occurred.

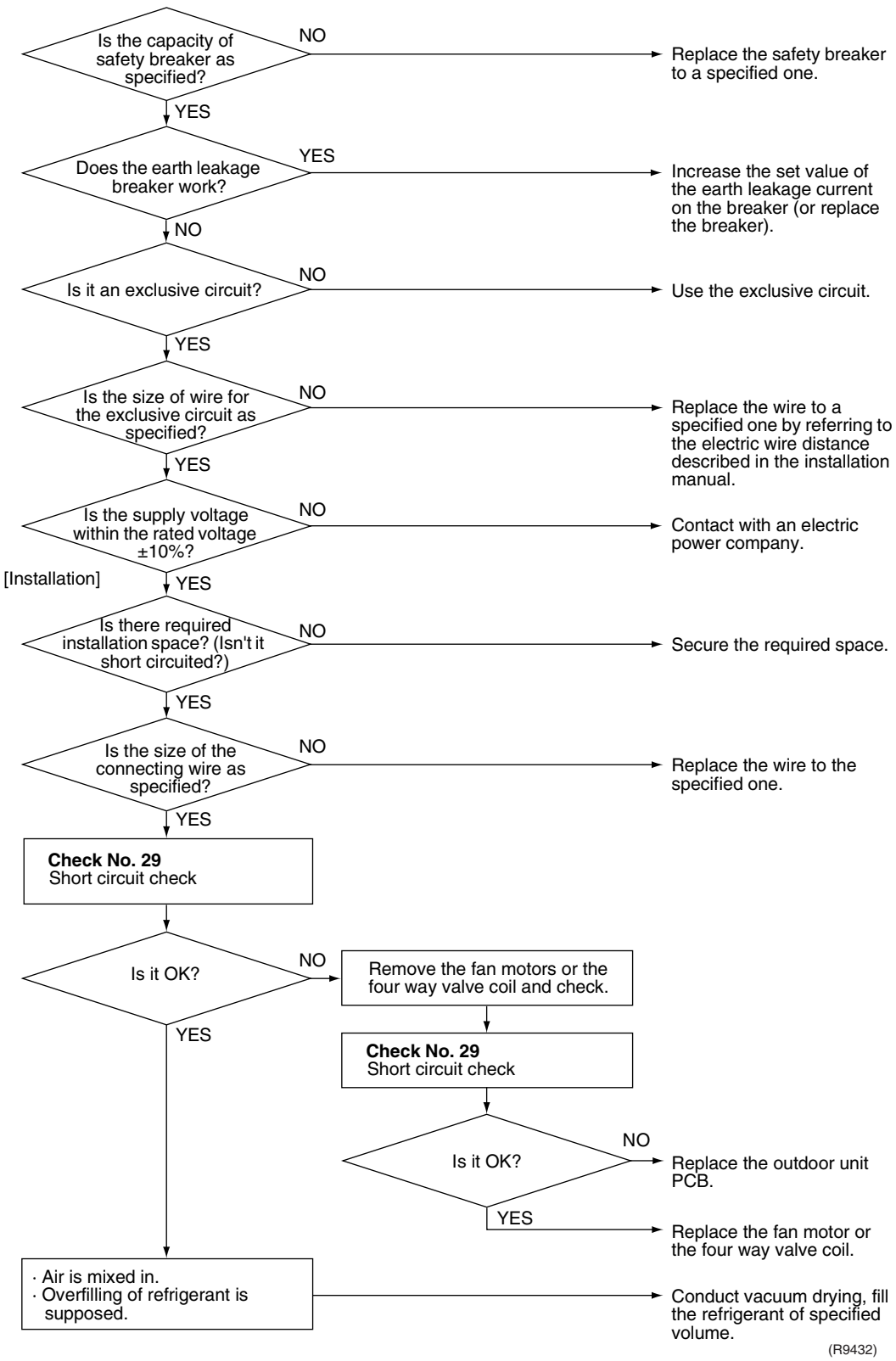

# 2.5 Air conditioner makes big noise and vibration.

**Method of Malfunction Detection**

**Malfunction Decision Conditions**

**Supposed Causes**

- Piping length is too short
- Mounting wall is too thin
- Insufficient vibration prevention measures
- Deformation of the unit
- Improper quantity of refrigerant

**Troubleshooting**

**Caution** Be sure to turn off power switch before connect or disconnect connector, or parts damage may be occurred.

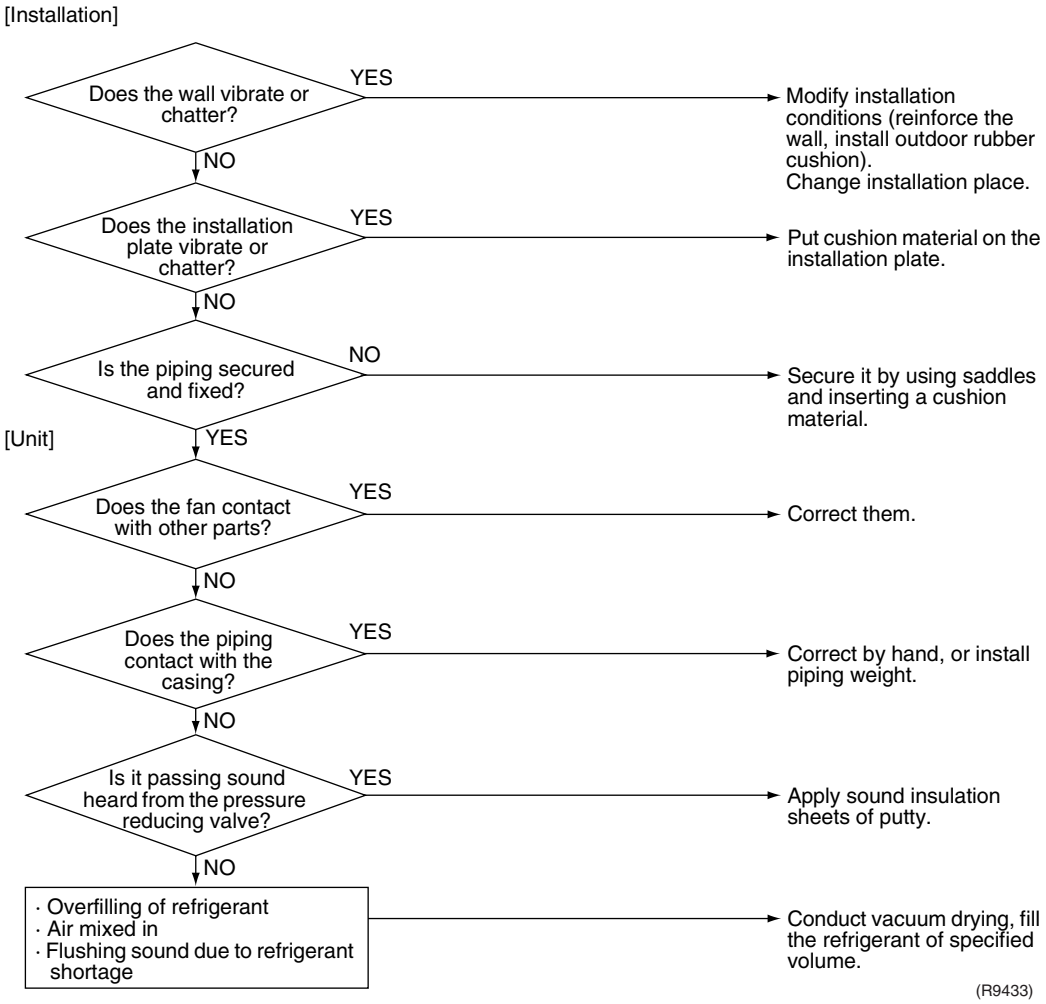

## 2.6 Air is not humidified enough.

**Method of Malfunction Detection**

**Malfunction Decision Conditions**

**Supposed Causes**

- Hose length is not set
- Incorrect hose length setting
- Short circuited at outdoor unit
- Blocked humidification filter
- Insufficient heat insulation of duct
- Indoor ventilation is made too often
- Ceiling is very high.

## Troubleshooting

**Caution** Be sure to turn off power switch before connect or disconnect connector, or parts damage may be occurred.

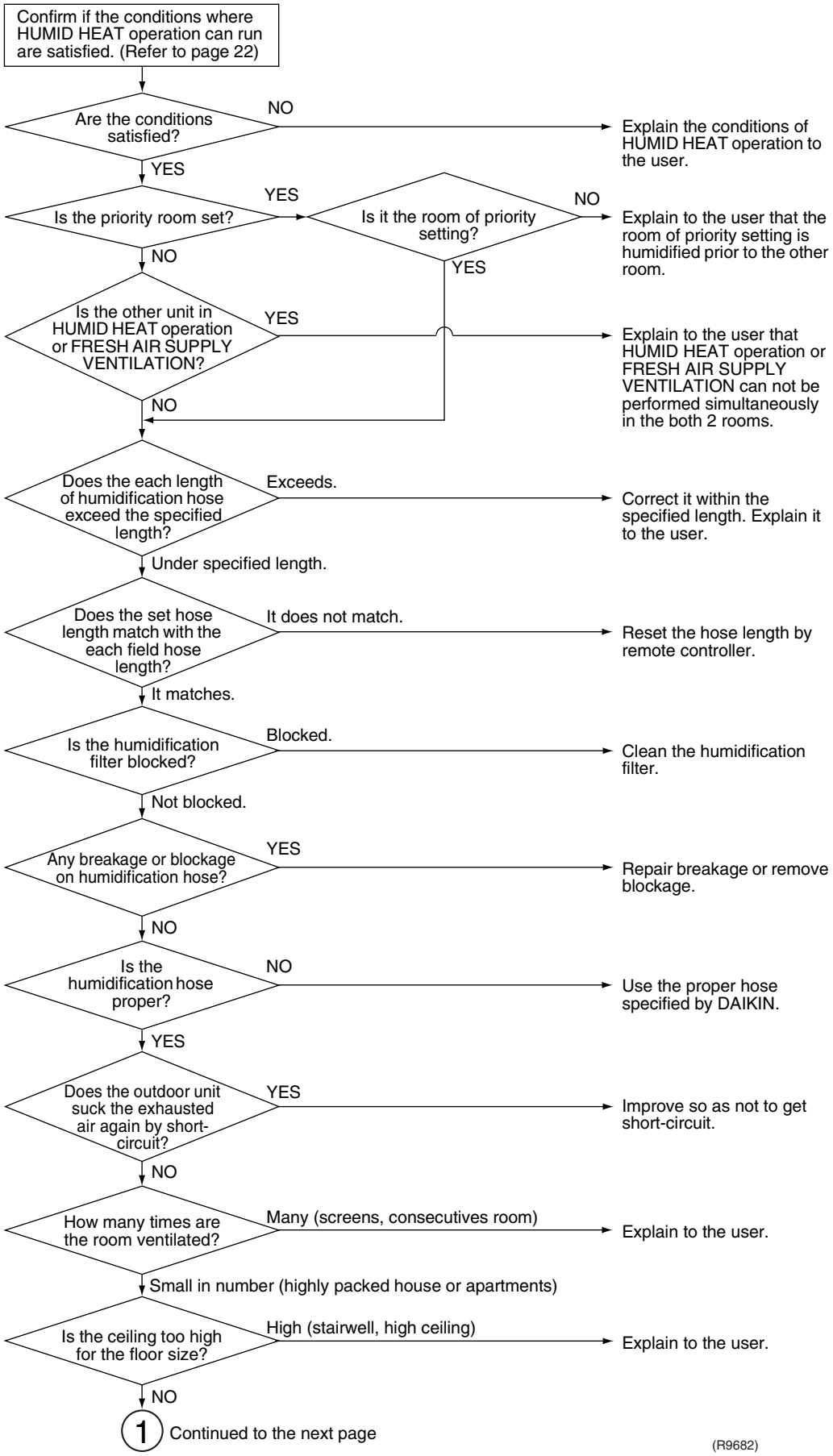

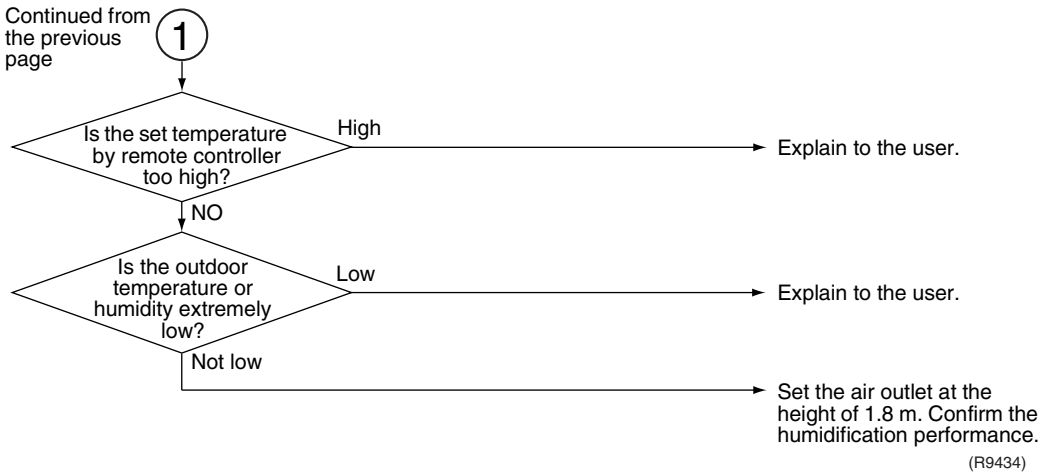


**Note:** Refer to P. 40 for the priority room setting.

# 2.7 Indoor Unit PCB Abnormality

**Remote Controller Display**

A1

**Method of Malfunction Detection**

Evaluation of zero-cross detection of power supply by indoor unit.

**Malfunction Decision Conditions**

When there is no zero-cross detection in approximately 10 continuous seconds.

**Supposed Causes**

- Faulty indoor unit PCB
- Faulty connector connection

**Troubleshooting**

**Caution** Be sure to turn off power switch before connect or disconnect connector, or parts damage may be occurred.

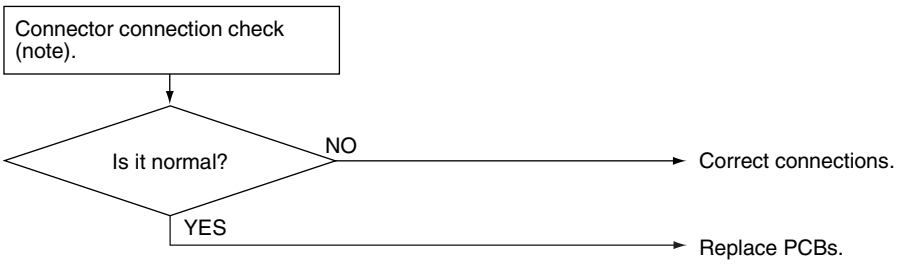


(R7130)

**Note:** Connector Nos. vary depending on models.

| Model Type | Connector No. |
|---|---|
| Wall Mounted Type | Terminal strip~Control PCB |

## 2.8 Freeze-up Protection Control or Heating Peak-cut Control

**Remote Controller Display**

A5

**Method of Malfunction Detection**

- Heating peak-cut control
  During heating operations, the temperature detected by the indoor heat exchanger thermistor is used for the high pressure control (stop, outdoor fan stop, etc.)
- Freeze-up protection control (operation halt) is activated during cooling operation according to the temperature detected by the indoor unit heat exchanger thermistor.

**Malfunction Decision Conditions**

- Heating peak-cut control
  During heating operations, the temperature detected by the indoor heat exchanger thermistor is above 65°C
- Freeze-up protection
  When the indoor unit heat exchanger temperature is below 0°C during cooling operation.

**Supposed Causes**

- Operation halt due to clogged air filter of the indoor unit.
- Operation halt due to dust accumulation on the indoor unit heat exchanger.
- Operation halt due to short-circuit.
- Detection error due to faulty indoor unit heat exchanger thermistor.
- Detection error due to faulty indoor unit PCB.

## Troubleshooting

**Check No.02**
**Refer to P.169**

**Caution** Be sure to turn off power switch before connect or disconnect connector, or parts damage may be occurred.

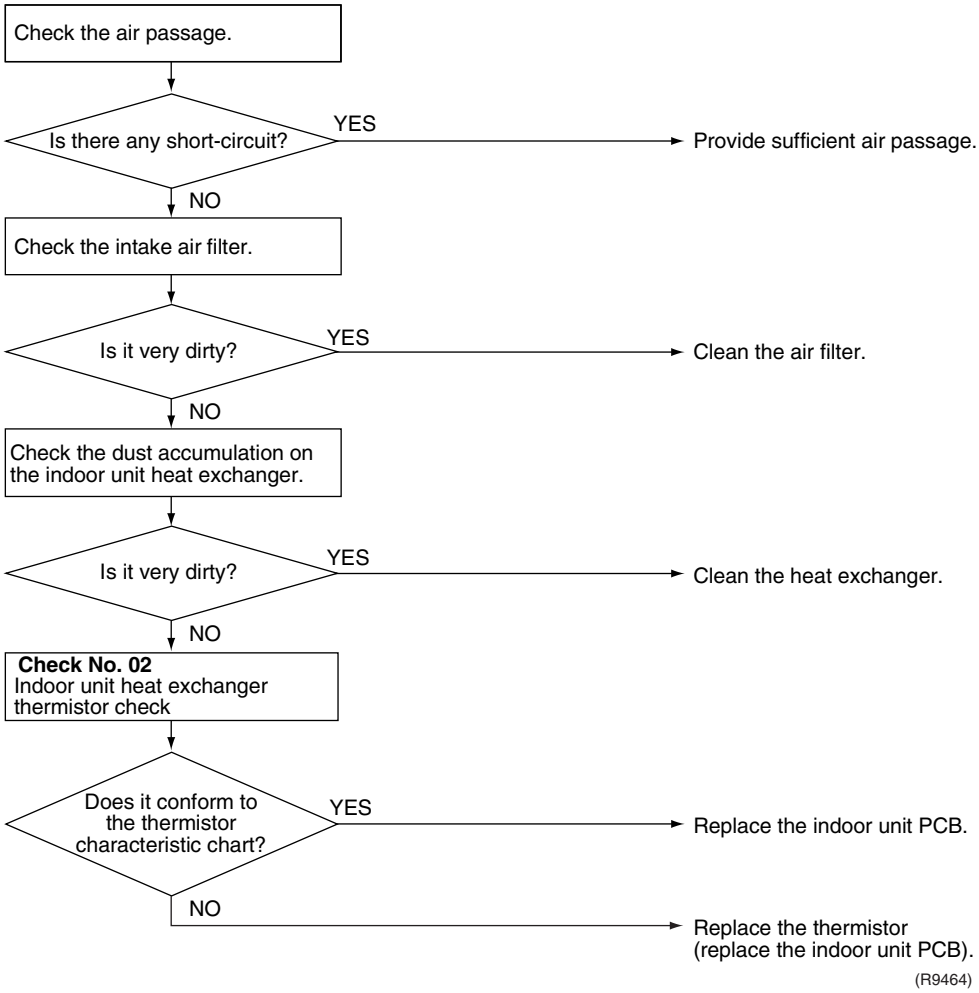

## 2.9 Fan Motor (DC Motor) or Related Abnormality

**Remote Controller Display**

A6

**Method of Malfunction Detection**

The rotation speed detected by the Hall IC during fan motor operation is used to determine abnormal fan motor operation.

**Malfunction Decision Conditions**

When the detected rotation speed does not reach the demanded rotation speed of the target tap, and is less than 50% of the maximum fan motor rotation speed.

**Supposed Causes**

- Operation halt due to short circuit inside the fan motor winding.
- Operation halt due to breaking of wire inside the fan motor.
- Operation halt due to breaking of the fan motor lead wires.
- Operation halt due to faulty capacitor of the fan motor.
- Detection error due to faulty indoor unit PCB.

## Troubleshooting

**Check No.01**
**Refer to P.168**

**Caution** Be sure to turn off power switch before connect or disconnect connector, or parts damage may be occurred.

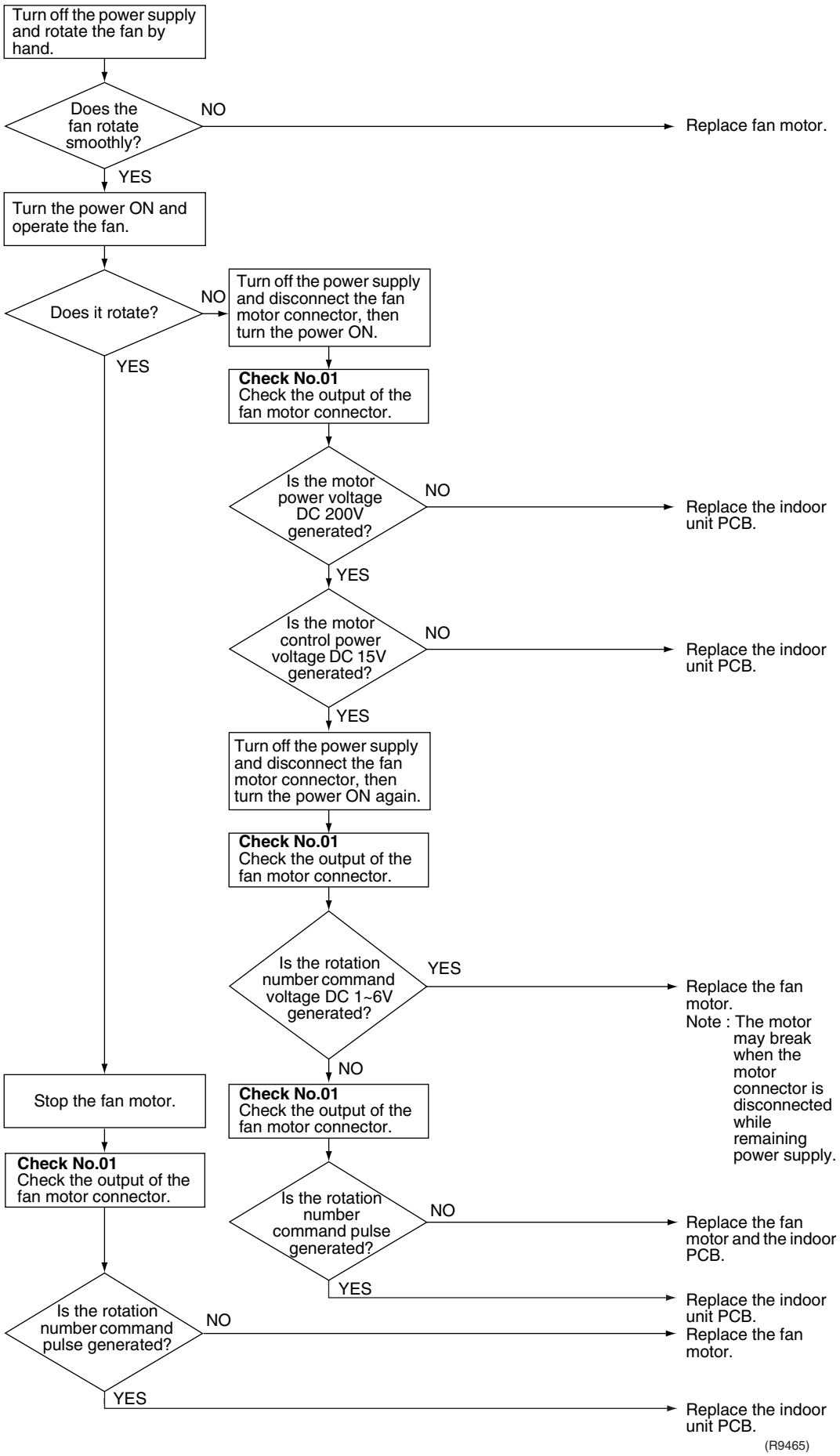

# 2.10 Thermistor or Related Abnormality (Indoor Unit)

**Remote Controller Display**

C4, C9

**Method of Malfunction Detection**

The temperatures detected by the thermistors are used to determine thermistor errors.

**Malfunction Decision Conditions**

When the thermistor input is more than 4.96 V or less than 0.04 V during compressor operation∗.
∗ (reference)
When above about 212°C (less than 120 Ω) or below about –50°C (more than 1,860 kΩ).

**Note:** The values vary slightly in some models.

**Supposed Causes**

- Faulty connector connection
- Faulty thermistor
- Faulty PCB

**Troubleshooting**

**Check No.02**
**Refer to P.169**

**Caution** Be sure to turn off power switch before connect or disconnect connector, or parts damage may be occurred.

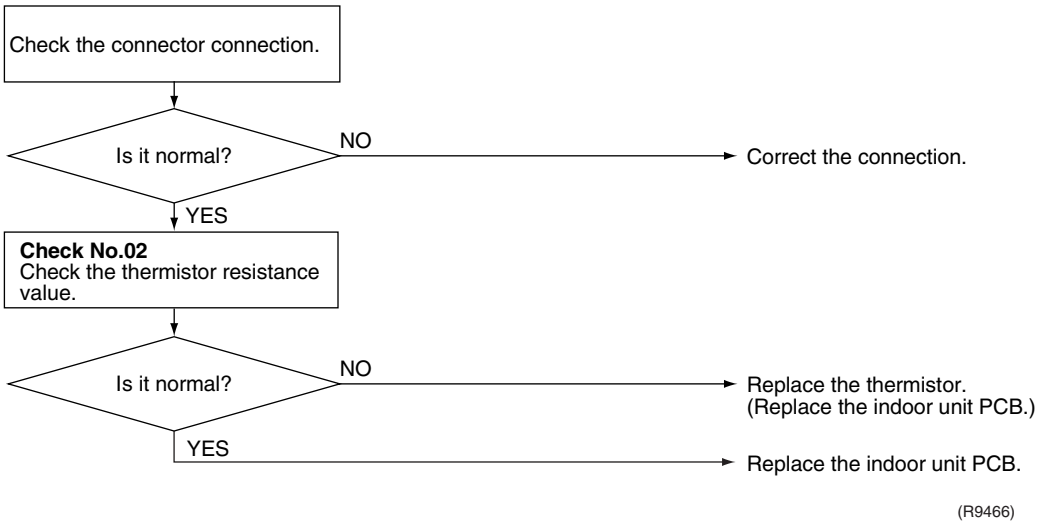


C4 : Heat exchanger thermistor
C9 : Room temperature thermistor

# 2.11 Humidity Sensor Abnormality

**Remote Controller Display**

CC

**Method of Malfunction Detection**

Sensor abnormality is detected by input value.

**Malfunction Decision Conditions**

When the input from a temperature sensor is 4.96 V or more or 0.04 V or less*

**Supposed Causes**

- Improper connector connection
- Defective indoor control PCB
- Defective humidity sensor PCB

**Troubleshooting**

**Caution** Be sure to turn off power switch before connect or disconnect connector, or parts damage may be occurred.

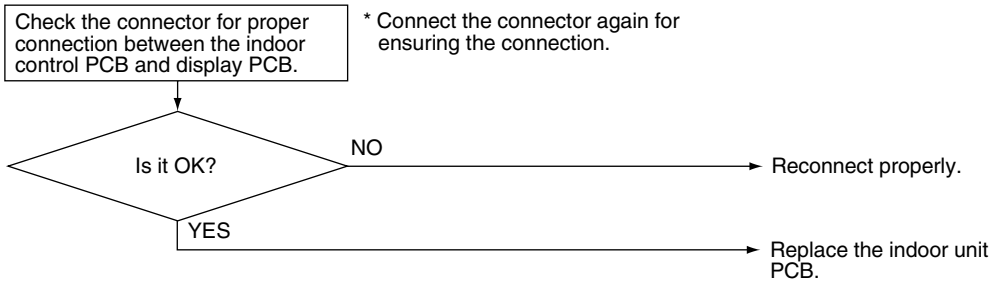


CC : Humidity sensor

(R9422)

## 2.12 Signal Transmission Error (Indoor Unit - Outdoor Unit)

| | |
|---|---|
| **Remote Controller Display** | U4 |
| **Method of Malfunction Detection** | The data sent from the outdoor unit is checked for problem. |
| **Malfunction Decision Conditions** | When the data sent from the outdoor unit can not be received without error, or when the disable status of signal transmission continues for 15 seconds. |
| **Supposed Causes** | ■ Defective outdoor unit PCB<br>■ Defective indoor unit PCB<br>■ Signal transmission error between indoor and outdoor unit due to improper wiring<br>■ Signal transmission error between indoor and outdoor unit due to breakage of relay wire (transmission wire) |

## Troubleshooting

**Caution** Be sure to turn off power switch before connect or disconnect connector, or parts damage may be occurred.

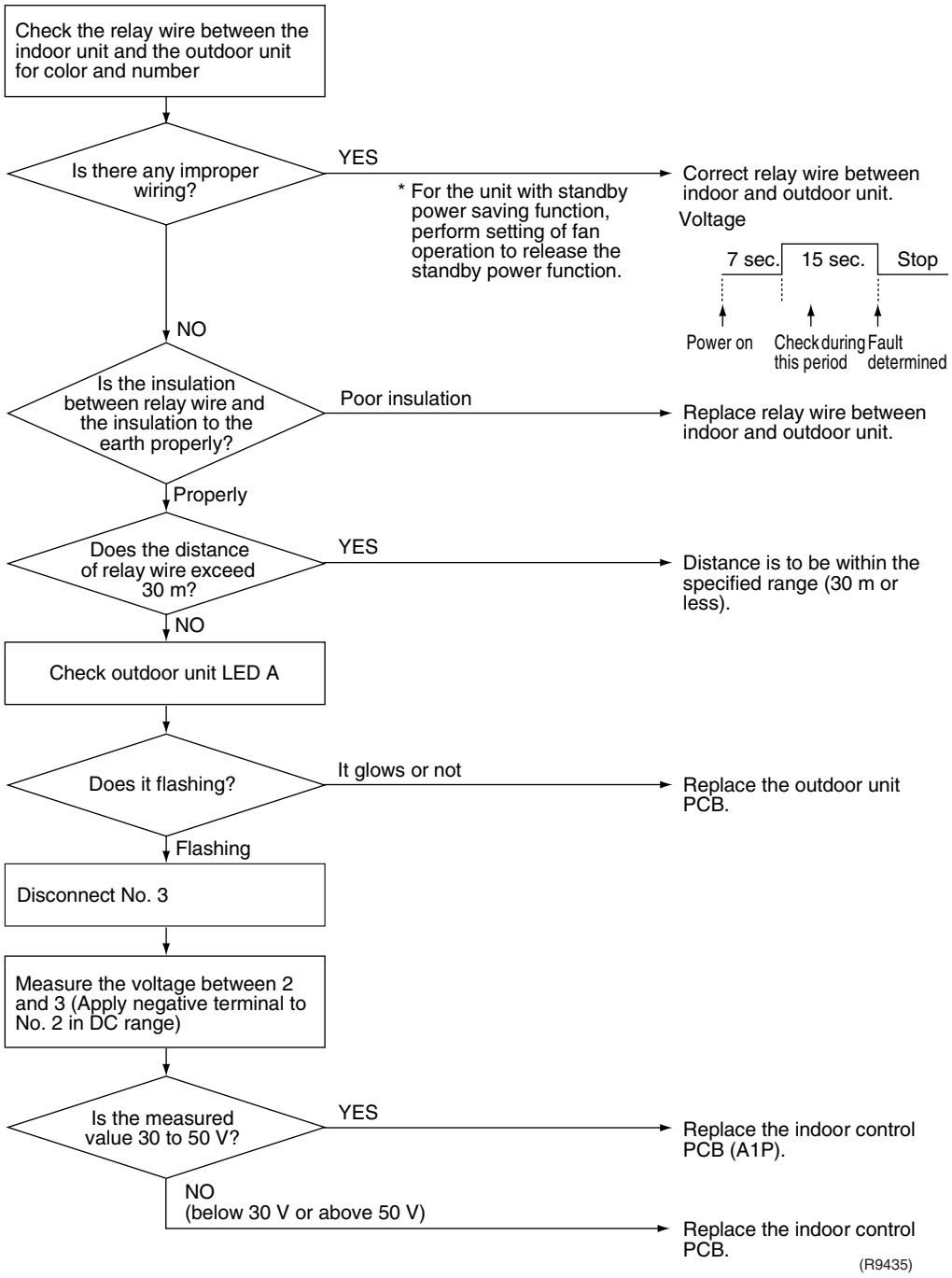

# 2.13 Incompatible Power Supply between Indoor Unit and Outdoor Unit

**Remote Controller Display**

UP

**Method of Malfunction Detection**

Check the incompatible power supply between indoor unit and outdoor unit by using signal transmission.

**Method of Malfunction Detection**

In case that the indoor intake model is connected to outdoor intake model.

**Supposed Causes**

- Connected to wrong model
- Mounted improper indoor unit PCB
- Defective indoor unit PCB
- Mounted improper outdoor unit PCB or defective PCB

**Troubleshooting**

**Caution** Be sure to turn off power switch before connect or disconnect connector, or parts damage may be occurred.

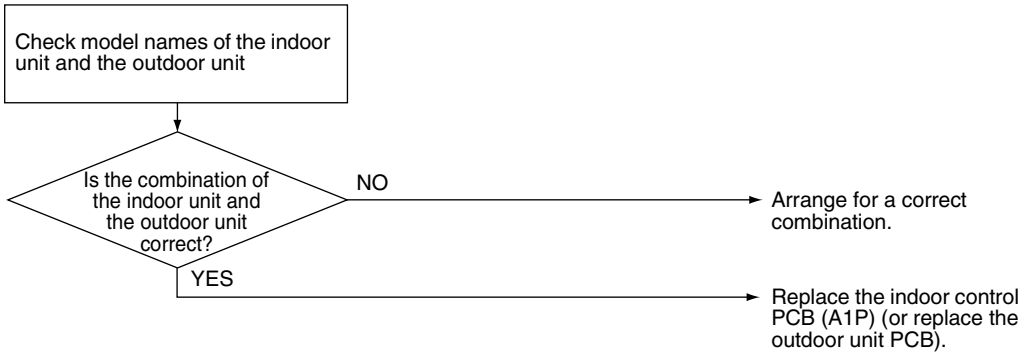


(R9436)

# 2.14 Incomplete Setting for Hose Length

**Remote Controller Display**

UA

**Method of Malfunction Detection**

This fault occurs when the humidification hose length is not stored in the EEPROMs of the indoor unit and the outdoor unit.
(Hose length is not stored at initial power on.)

**Malfunction Decision Conditions**

- When the humidification hose length is not stored in EEPROMs of the indoor unit and the outdoor unit.

**Supposed Causes**

Hose length is not set.
Hose length is erased by replacement of the indoor unit PCB or the outdoor unit PCB. (When both the indoor unit and the outdoor unit PCBs are replaced simultaneously, the set value is erased.)

**Troubleshooting**

**Caution** Be sure to turn off power switch before connect or disconnect connector, or parts damage may be occurred.

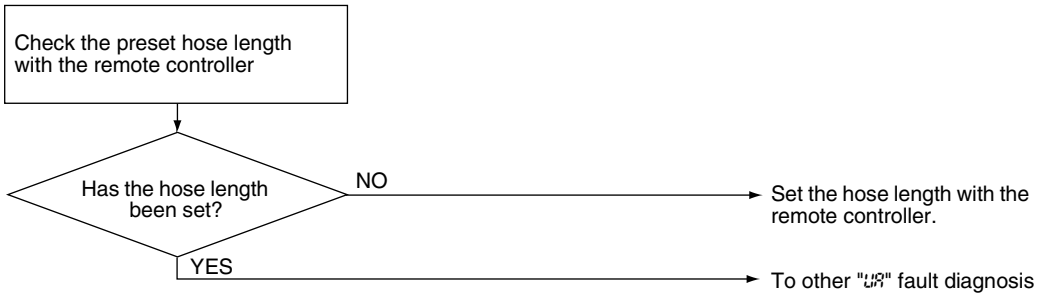


(R9423)

**How to check the preset hose length**

1) Press the 3 buttons (TEMP ▲, ▼, MODE) simultaneously.
SC is displayed. (A)

A

2) Press the TEMP ▲ or ▼ button and select PC. (B)

B

3) Press the MODE button to enter the pipe check mode. (C)

C

4) Press the TEMP ▲ or ▼ button to change the display of the hose length. (D)

D
(Set point; long beep)

5) Long beep sound means that the display shows the preset hose length.
If you hear the long beep when the display is (E), the hose length is not set.

E

# 2.15 Freeze-up Protection in Other Rooms / Unspecified Voltage (between Indoor and Outdoor Units)

**Remote Controller Display**

UA, UH

**Method of Malfunction Detection**

A wrong connection is detected by checking the combination of indoor and outdoor units on the microcomputer.

**Malfunction Decision Conditions**

- Operation halt due to the freeze-up protection in other rooms
- Operation halt due to unspecified voltage between indoor and outdoor units

**Supposed Causes**

- Operation halt due to the freeze-up protection in other rooms
- Wrong connections at the indoor unit
- PCB wrongly connected

**Troubleshooting**

**Caution** Be sure to turn off power switch before connect or disconnect connector, or parts damage may be occurred.

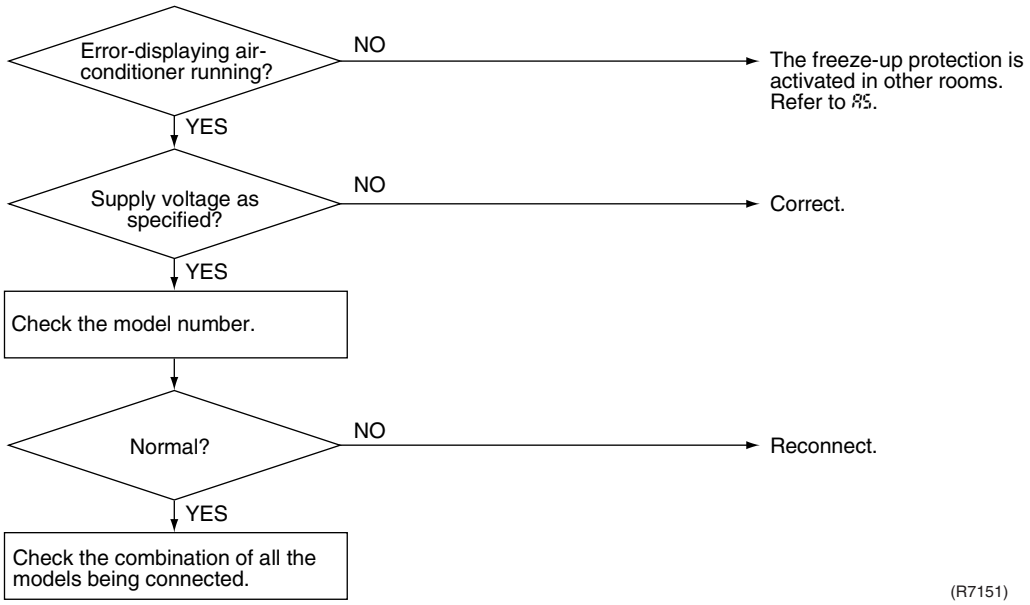

# 2.16 Outdoor Unit PCB Abnormality

**Remote Controller Display**

E1

**Method of Malfunction Detection**

- Detect within the program of the microcomputer that the program is in good running order.
- Detect input of zero-cross signal.

**Malfunction Decision Conditions**

- When the program of the microcomputer is in bad running order.
- Zero-cross signal can not be detected.

**Supposed Causes**

- Out of control of microcomputer caused by external factors
  - Noise
  - Momentary fall of voltage
  - Momentary power loss
- Defective outdoor unit PCB
- Breakage of harness between PCBs

**Troubleshooting**

**Caution** Be sure to turn off power switch before connect or disconnect connector, or parts damage may be occurred.

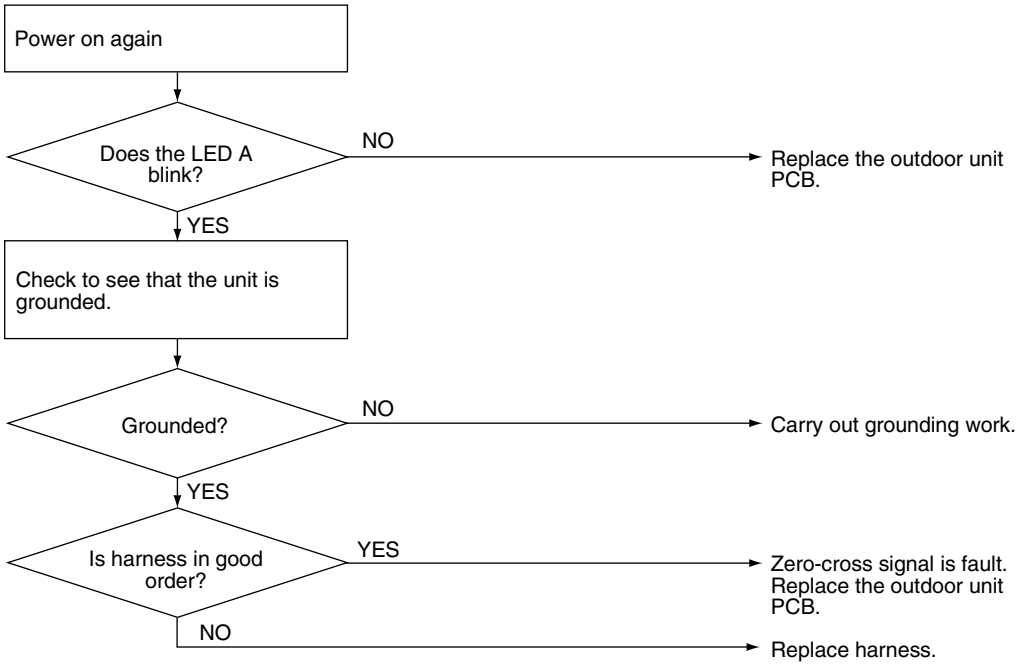


(R9437)

# 2.17 OL Activation (Compressor Overload)

**Remote Controller Display**

E5

**Method of Malfunction Detection**

A compressor overload is detected through compressor OL.

**Malfunction Decision Conditions**

- If the compressor OL is activated twice, the system is shut down.
- The error counter resets itself if this or any other error does not occur during the following 60-minute compressor running time (total time).

∗ The operating temperature condition is not specified.

**Supposed Causes**

- Refrigerant shortage
- Four way valve malfunctioning
- Outdoor unit PCB defective
- Water mixed in the local piping
- Electronic expansion valve defective
- Stop valve defective

**Troubleshooting**

**Caution** Be sure to turn off power switch before connect or disconnect connector, or parts damage may be occurred.

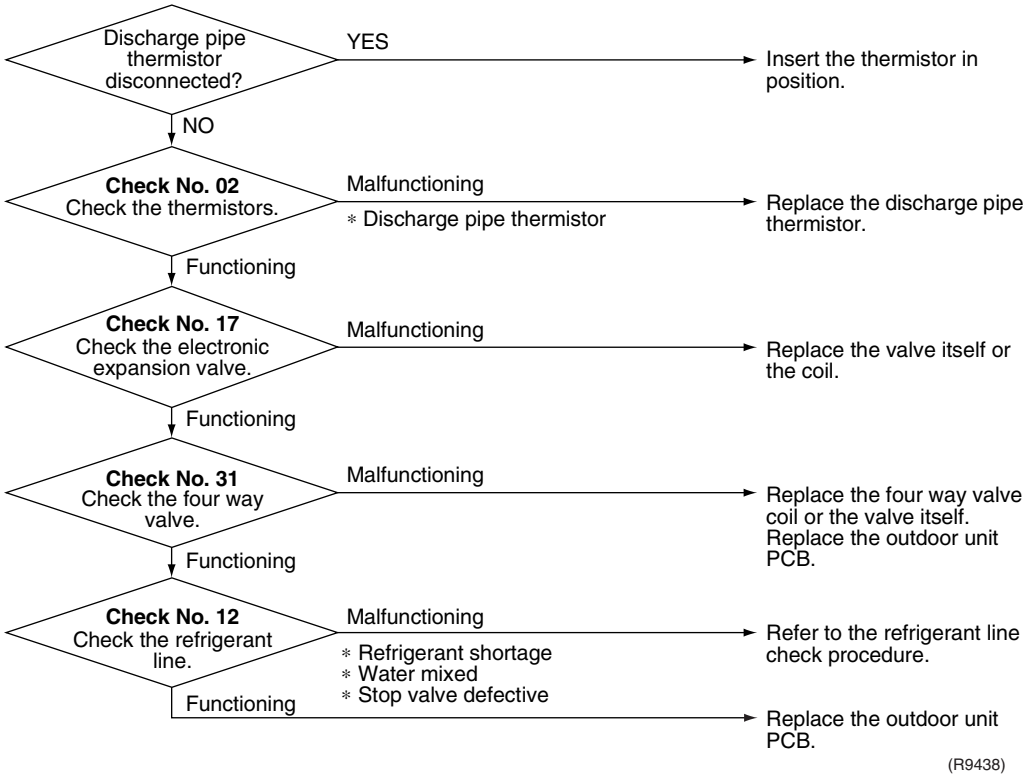

# 2.18 Compressor Lock

**Remote Controller Display**

E6

**Method of Malfunction Detection**

Judging from current waveform generated when high-frequency voltage is applied to the compressor.

**Malfunction Decision Conditions**

- The system is shut down when the fault count reaches 16 times.
- Clear condition: Continuous operation for 11 minutes (without fault)

**Supposed Causes**

- Compressor lock
- Disconnection of compressor harness

**Troubleshooting**

**Check No.14**
**Refer to P.173**

**Caution** Be sure to turn off power switch before connect or disconnect connector, or parts damage may be occurred.

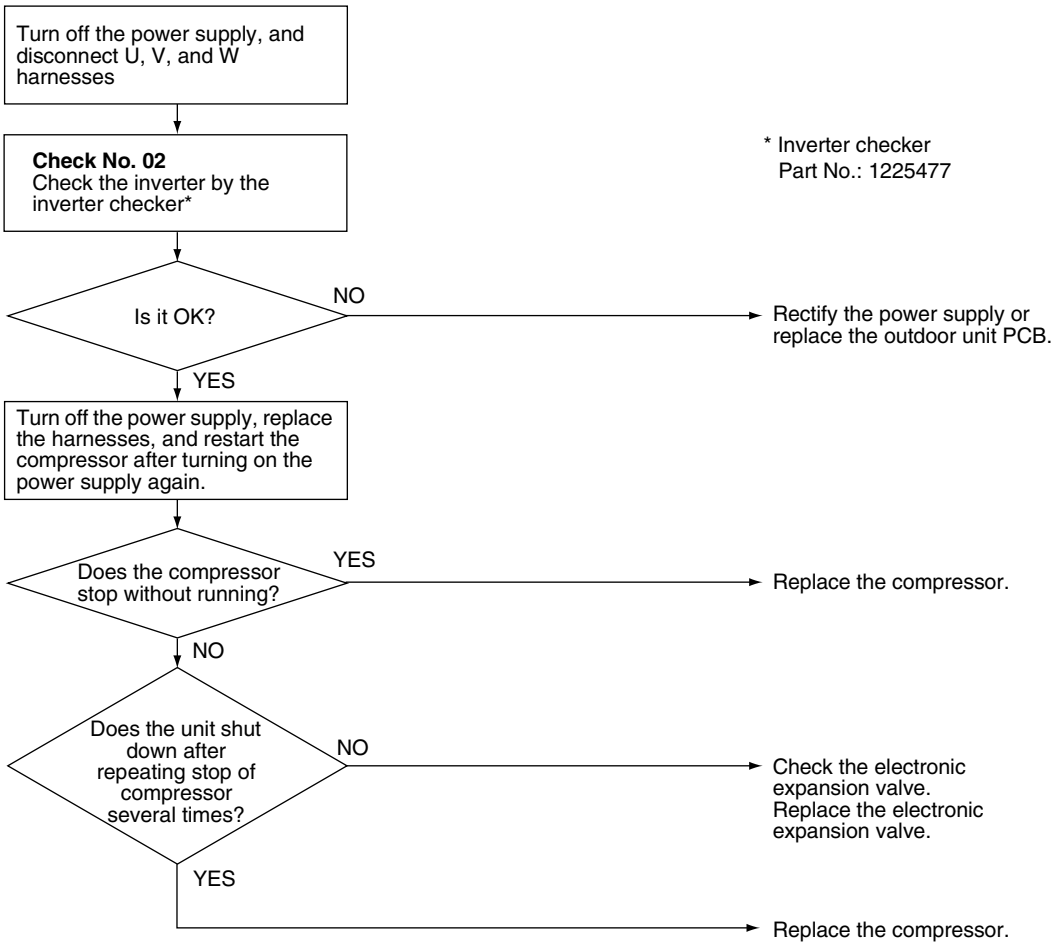


(R9439)

# 2.19 DC Fan Lock

**Remote Controller Display**

E7

**Method of Malfunction Detection**

Identify the fan motor system fault based on fan speed detected by Hall IC during high pressure fan motor running.

**Malfunction Decision Conditions**

- When the fan motor is running, the fan does not rotate for 150 seconds or more.
- Shut down when the error repeats 16 times
- Clear condition: The fan continuously rotates for 11 minutes. (without fault)

**Supposed Causes**

- Failure in fan motor
- Disconnection or improper connection of harness/connector between fan motor and PCB
- The fan does not rotate because it gets caught in foreign matter

**Troubleshooting**

**Check No.23**
**Refer to P.177**

**Caution** Be sure to turn off power switch before connect or disconnect connector, or parts damage may be occurred.

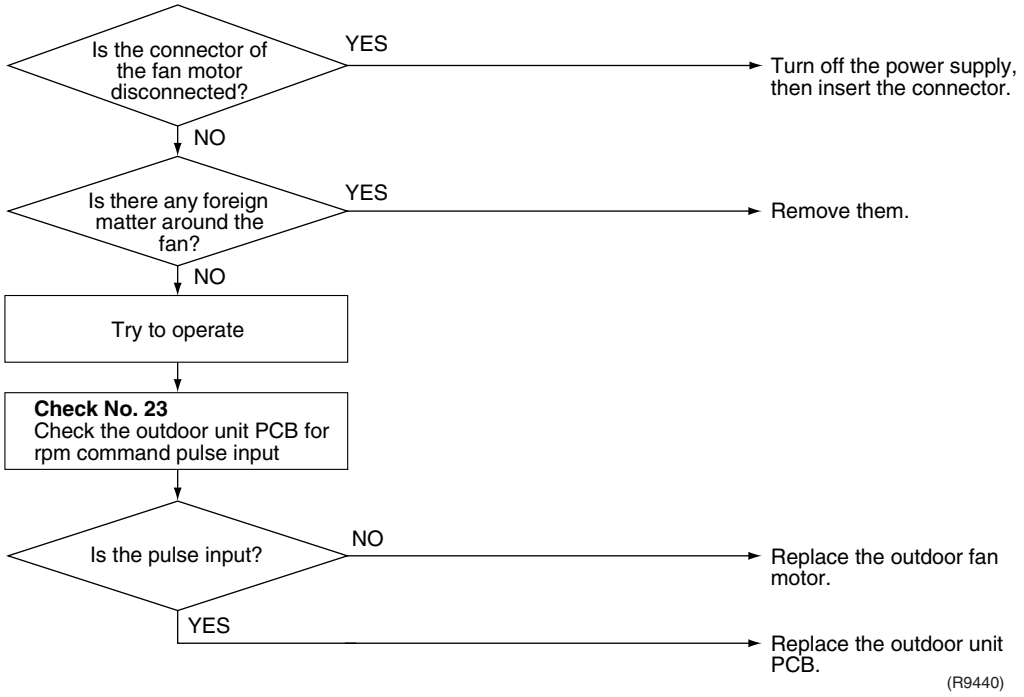

# 2.20 Input Overcurrent Detection

**Remote Controller Display**

E8

**Method of Malfunction Detection**

Detect an input overcurrent by checking the inverter power consumption or the input current detected by CT with the compressor running.

**Malfunction Decision Conditions**

- When Ⓐ or more of CT input continues for 2.5 seconds.
- The compressor stops if the error occurs, and restarts automatically after 3 minutes standby.

| | Ⓐ |
|---|---|
| 40 class | 11.0 A |
| 50 class | 12.5 A |

**Supposed Causes**

- Overcurrent due to defective compressor
- Overcurrent due to defective power transistor
- Overcurrent due to defective electrolytic capacitor of inverter main circuit
- Overcurrent due to defective outdoor unit PCB
- Detection error due to defective outdoor unit PCB
- Overcurrent due to short circuit

## Troubleshooting

Check No.03
Refer to P.170

Check No.11
Refer to P.171

Check No.14
Refer to P.173

Check No.16
Refer to P.175

**Caution** Be sure to turn off power switch before connect or disconnect connector, or parts damage may be occurred.

* Input over current may be caused by improper wiring inside the unit. If the unit stops due to input over current after connecting or disconnecting wires to replace part, check wiring for proper connection.

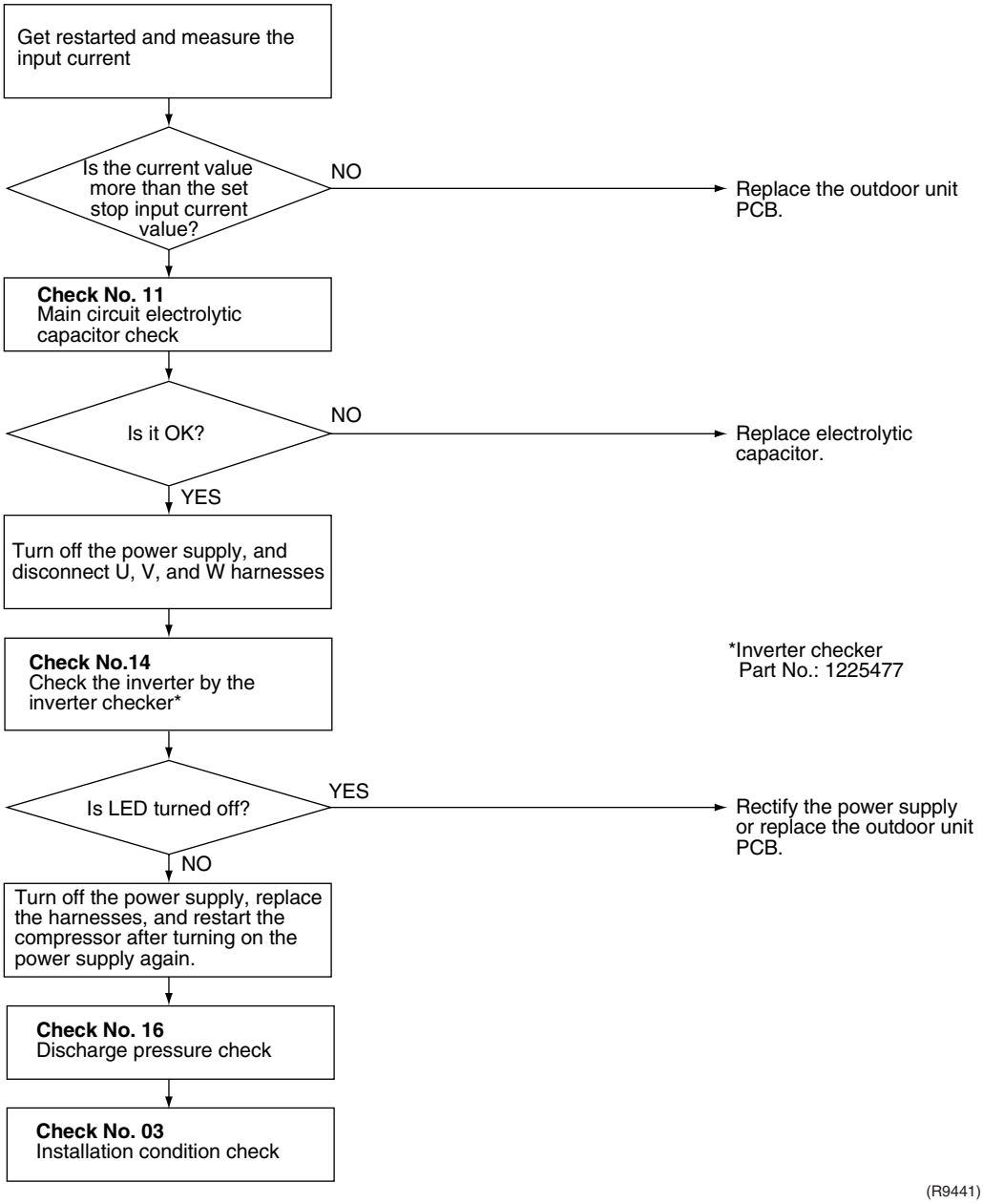


(R9441)

# 2.21 Discharge Pipe Temperature Control

**Remote Controller Display**

F3

**Method of Malfunction Detection**

Discharge pipe temperature control (stop, frequency attenuation, etc.) is executed based on the temperature detected by the discharge pipe thermistor.

**Malfunction Decision Conditions**

If the temperature being detected by the discharge pipe thermistor rises, the compressor stops. The temperature at which the compressor halts varies according to the frequency.
(1) 110°C when the frequency is above 30Hz on ascending or above 25Hz on descending.
(2) 108°C when the frequency is below 30Hz on ascending or below 25Hz on descending.

- The error is cleared when the temperature has dropped below 95°C.
- If the compressor stops 4 times successively due to abnormal discharge pipe temperature, the system is shut down.
- The error counter resets itself if this or any other error does not occur during the following 60-minute compressor running time (total time).

**Supposed Causes**

- Refrigerant shortage
- Faulty operation of four way valve
- Defective discharge pipe thermistor
  (Defective heat exchanger thermistor or outdoor air thermistor)
- Defective outdoor unit PCB
- Water mixed in the field piping
- Defective electronic expansion valve
- Defective stop valve

**Troubleshooting**

**Check No.02**
**Refer to P.169**

**Check No.12**
**Refer to P.172**

**Check No.17**
**Refer to P.176**

**Caution** Be sure to turn off power switch before connect or disconnect connector, or parts damage may be occurred.

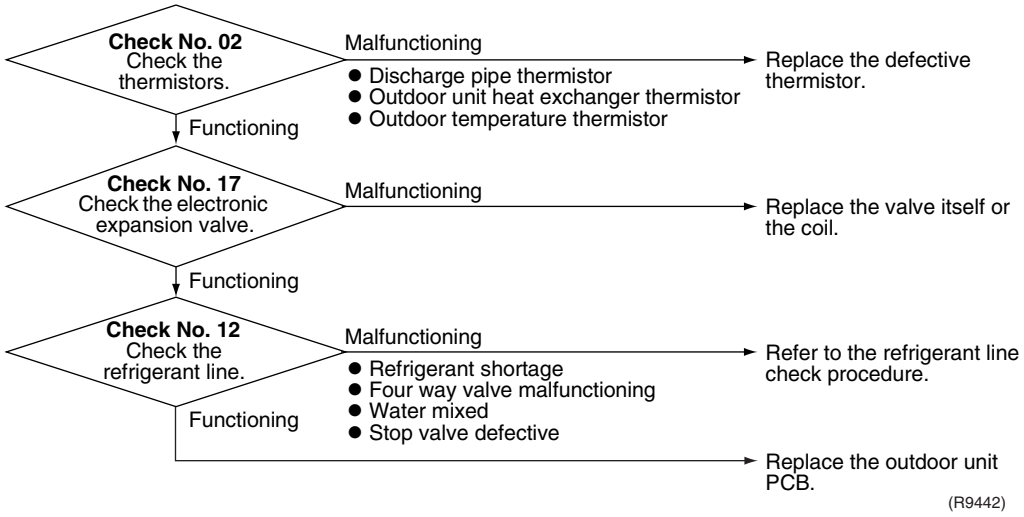

# 2.22 High Pressure Control in Cooling

| | |
|---|---|
| **Remote Controller Display** | F6 |
| **Method of Malfunction Detection** | During cooling, high pressure control (stop, frequency attenuation, etc.) is executed according to the temperature detected by the heat exchanger thermistor. |
| **Malfunction Decision Conditions** | ■ Activated when the temperature being sensed by the heat exchanger thermistor rises above 65°C.<br>■ Deactivated when the temperature drops below 53°C. |
| **Supposed Causes** | ■ Insufficient installation space<br>■ Defective outdoor fan<br>■ Defective electronic expansion valve<br>■ Defective heat exchanger thermistor<br>■ Defective outdoor unit PCB<br>■ Defective stop valve |

## Troubleshooting

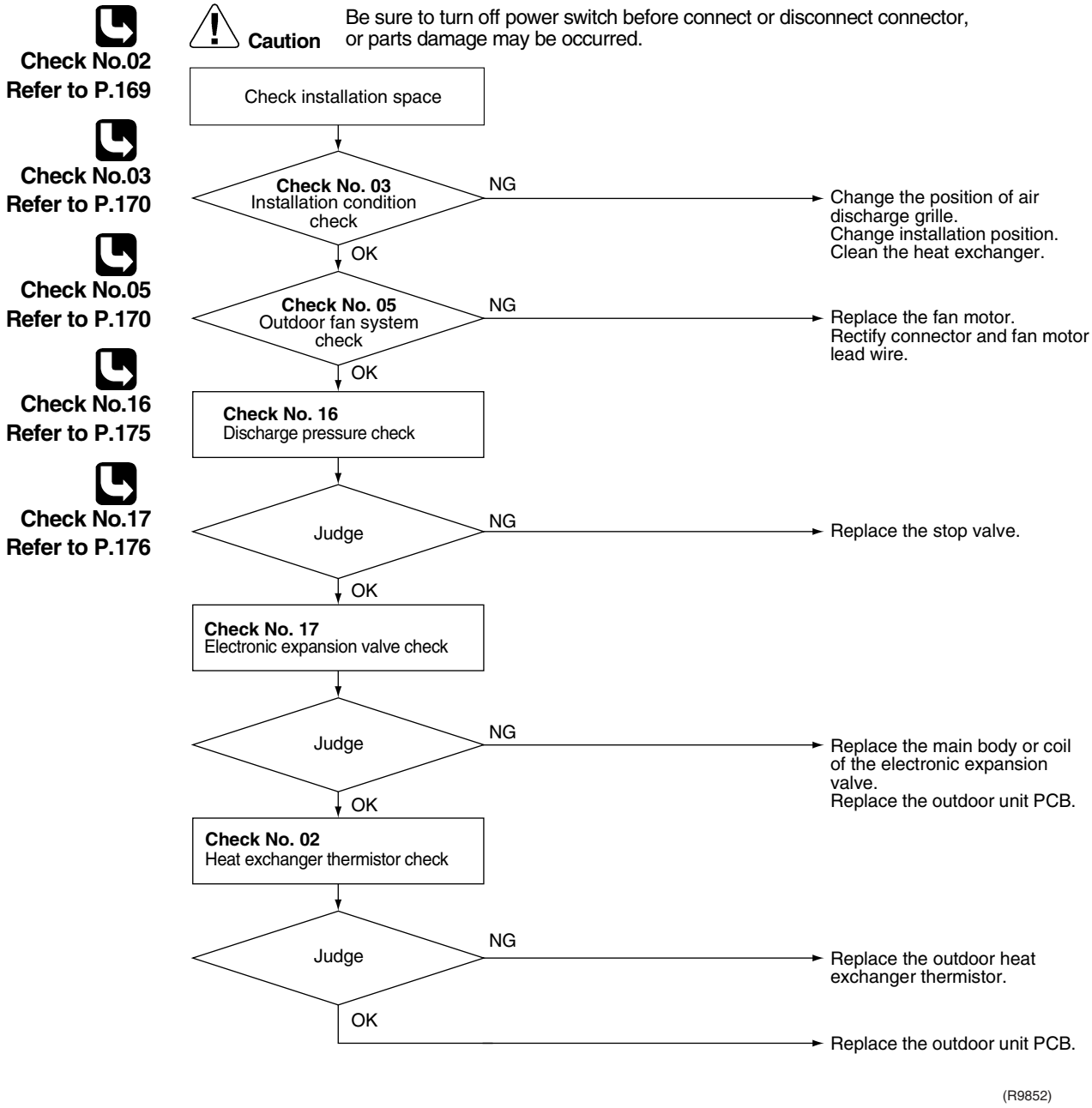

# 2.23 Compressor Sensor System Abnormality

**Remote Controller Display**

H0

**Method of Malfunction Detection**

Fault condition is identified by DC current which is detected before compressor startup.

**Malfunction Decision Conditions**

- When the DC voltage is 50 V or less.

**Supposed Causes**

- Defective PCB
- Harness disconnection / defective connection

**Troubleshooting**

**Caution** Be sure to turn off power switch before connect or disconnect connector, or parts damage may be occurred.

**Replace the outdoor unit PCB.**

# 2.24 Damper Abnormality

**Remote Controller Display**

H1

**Method of Malfunction Detection**

Detected by the limit switch (LS) in the humidifier unit.

**Malfunction Decision Conditions**

- Limit switch does not turn on or off when the operation of humidifier unit starts or finishes. For example, when turning on the power supply, when humidification operation (including air supply ventilation) starts.

**Supposed Causes**

- Faulty damper operation due to frost
- Faulty damper operation due to foreign material
- Limit switch fault (including improper connection)
- Defective motor for damper

**Troubleshooting**

**Caution** Be sure to turn off power switch before connect or disconnect connector, or parts damage may be occurred.

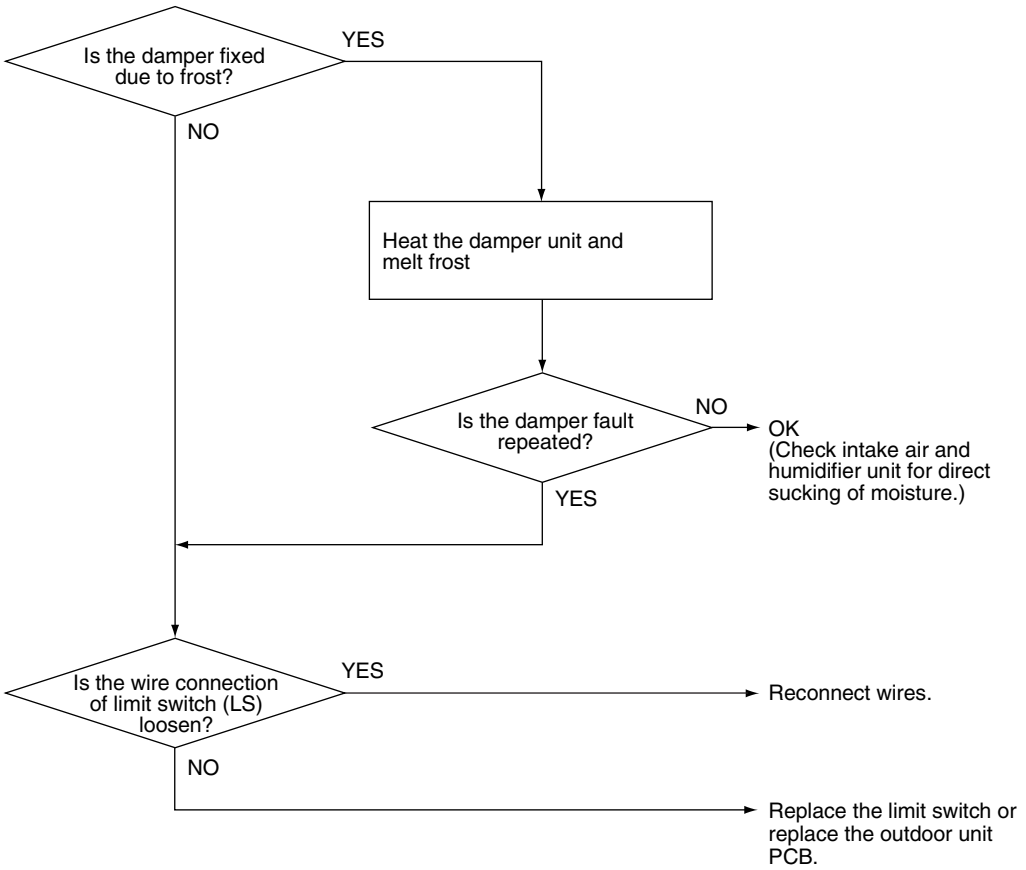


(R10339)

# 2.25 Position Sensor Abnormality

| | |
|---|---|
| **Remote Controller Display** | H6 |
| **Method of Malfunction Detection** | Startup failure of the compressor is identified by rpm information of the compressor and by electric component position detector. |
| **Malfunction Decision Conditions** | ■ When the compressor does not run for 15 seconds after receiving operation start command<br>■ The unit shuts down if the fault occurs 16 times<br>■ Clear condition: The compressor continuously runs for 11 minutes without fault |
| **Supposed Causes** | ■ Detection error due to disconnection of compressor harness<br>■ Startup failure due to defective compressor<br>■ Startup failure due to defective outdoor unit PCB<br>■ Startup failure due to closed stop valve<br>■ Input voltage fault |

## Troubleshooting

Check No.14
Refer to P.173

Check No.16
Refer to P.175

Check No.29
Refer to P.179

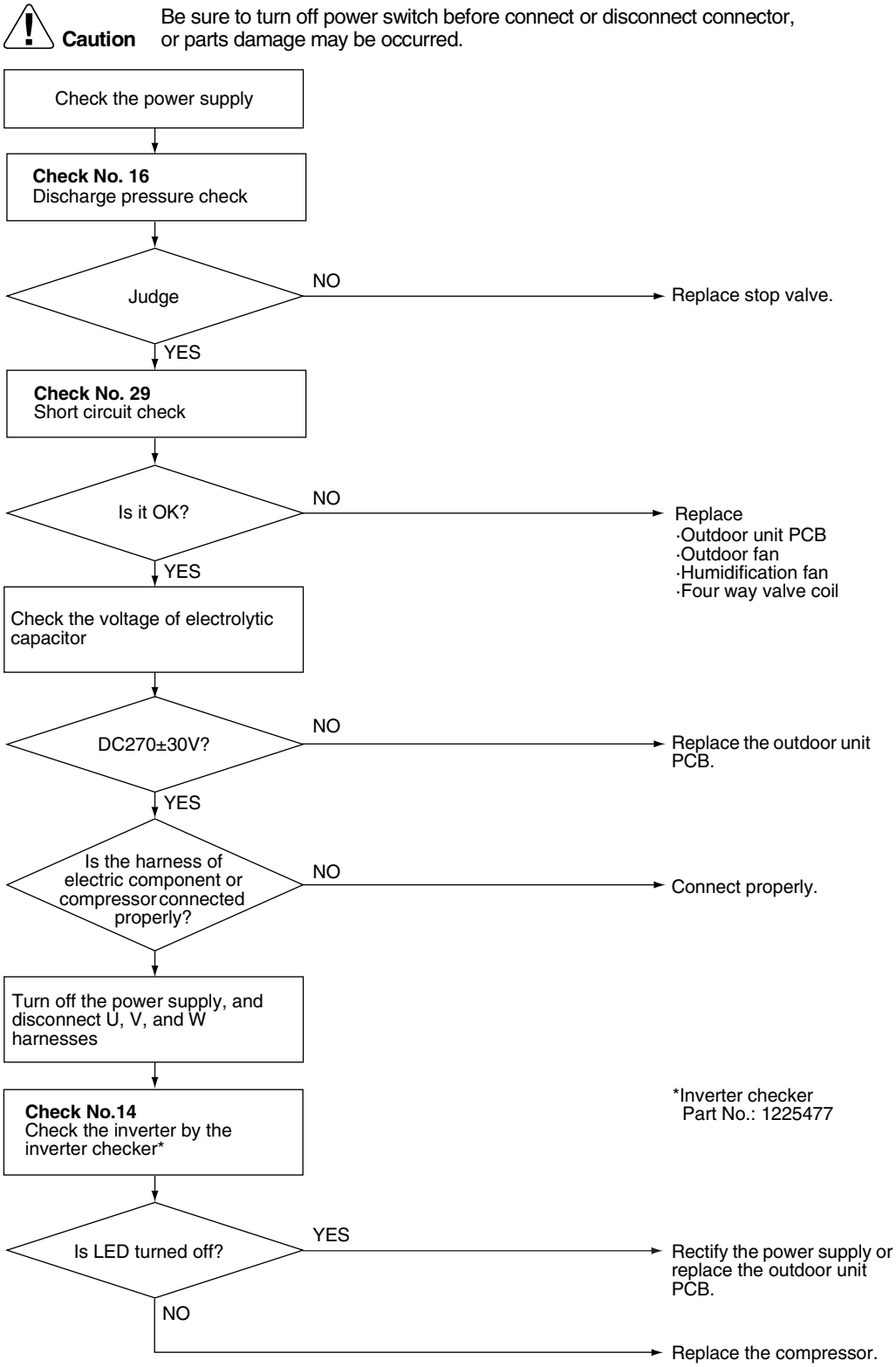


(R9445)

# 2.26 DC Voltage / DC Current Sensor Abnormality

**Remote Controller Display**

H8

**Method of Malfunction Detection**

DC voltage or DC current sensor system abnormality is identified based on the compressor operation frequency and the input current detected by the product of DC current and DC voltage.

**Malfunction Decision Conditions**

When the compressor operation frequency is more than 56 Hz (40 class) or 40 Hz (50 class), and when the input current is less than 0.25 A
(Input current is below 0.5 A)

- The unit shuts down when the fault occurs 4 times.
- Fault counter is reset to zero if the unit does not stop during accumulated compressor operation time of 60 minutes after restored from fault conditions.

**Supposed Causes**

- Defective outdoor unit PCB
- Defective current transformer

**Troubleshooting**

**Caution** Be sure to turn off power switch before connect or disconnect connector, or parts damage may be occurred.

**Replace the outdoor unit PCB.**

# 2.27 Thermistor or Related Abnormality (Outdoor Unit)

| | |
|---|---|
| **Remote Controller Display** | P4, J3, J6, J8, J9, H9 |
| **Method of Malfunction Detection** | This fault is identified based on the thermistor input voltage to the microcomputer.<br>A thermistor fault is identified based on the temperature detected by each thermistor. |
| **Malfunction Decision Conditions** | When power is supplied and the thermistor input is 4.98 V or more<br>or when the thermistor input is 0.02 V or less for 5 seconds continuously<br><br>For J3,<br>“Discharge pipe thermistor < heat exchanger thermistor” is taken into consideration to identify the fault.<br>For J8 or J9, although the system of the corresponding room is shut down, the outdoor unit can operate. |
| **Supposed Causes** | ■ Improper connection of connector<br>■ Defective thermistor<br>■ Defective indoor unit PCB<br>■ For J3, defective heat exchanger thermistor<br>(Cooling: outdoor heat exchanger thermistor, heating: indoor heat exchanger thermistor) |

## Troubleshooting

**Check No.02**
**Refer to P.169**

**Caution** Be sure to turn off power switch before connect or disconnect connector, or parts damage may be occurred.

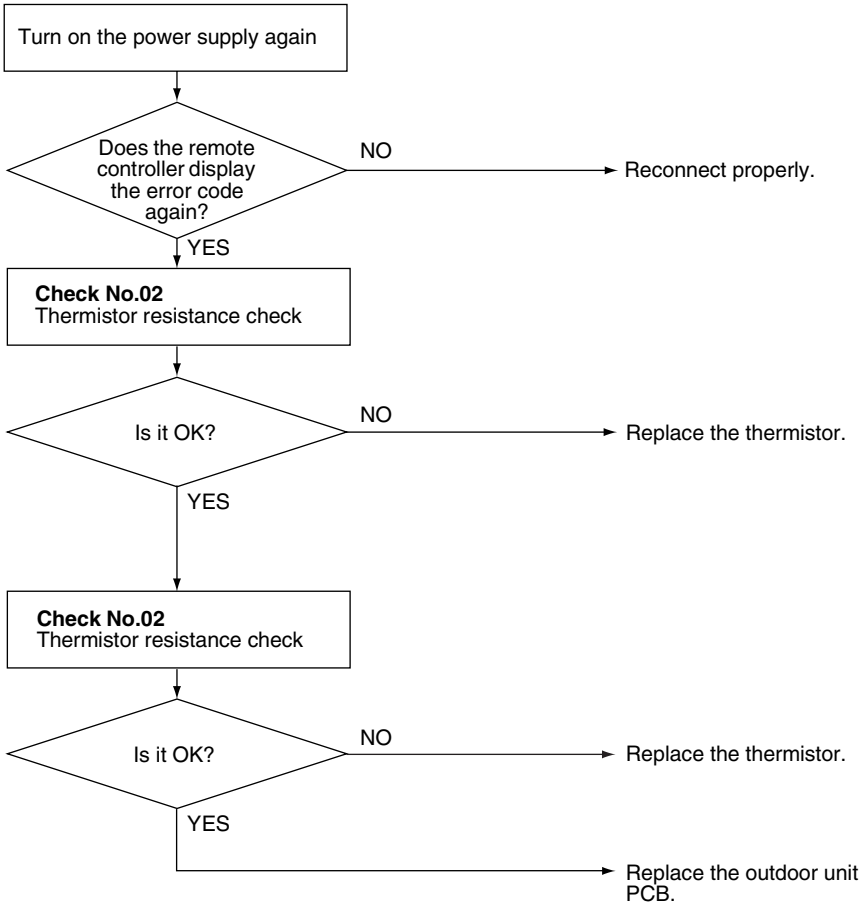


(R9446)

P4 : Radiation fin thermistor
J3 : Discharge pipe thermistor
J6 : Outdoor heat exchanger thermistor
J8 : Liquid pipe thermistor
J9 : Gas pipe thermistor
H9 : Outdoor air thermistor

# 2.28 Abnormal Temperature in Electrical Box

**Remote Controller Display**

L3

**Method of Malfunction Detection**

Temperature rise in the electrical box is identified based on the temperature of the radiation fin detected by the fin thermistor with the compressor off.

**Malfunction Decision Conditions**

- With the compressor off, the radiation fin temperature is above 80°C.
- The error is cleared when the temperature drops below 70°C.

**Supposed Causes**

- Fin temperature rise due to defective outdoor fan
- Fin temperature rise due to short circuit
- Detection error due to defective fin thermistor
- Detection error due to improper connection of connector
- Detection error due to defective outdoor unit PCB

## Troubleshooting

Check No.02
Refer to P.169

Check No.03
Refer to P.170

Check No.05
Refer to P.170

**Caution** Be sure to turn off power switch before connect or disconnect connector, or parts damage may be occurred.

(Note on resetting power supply)
To reset the unit, power off status need to continue at least 30 seconds

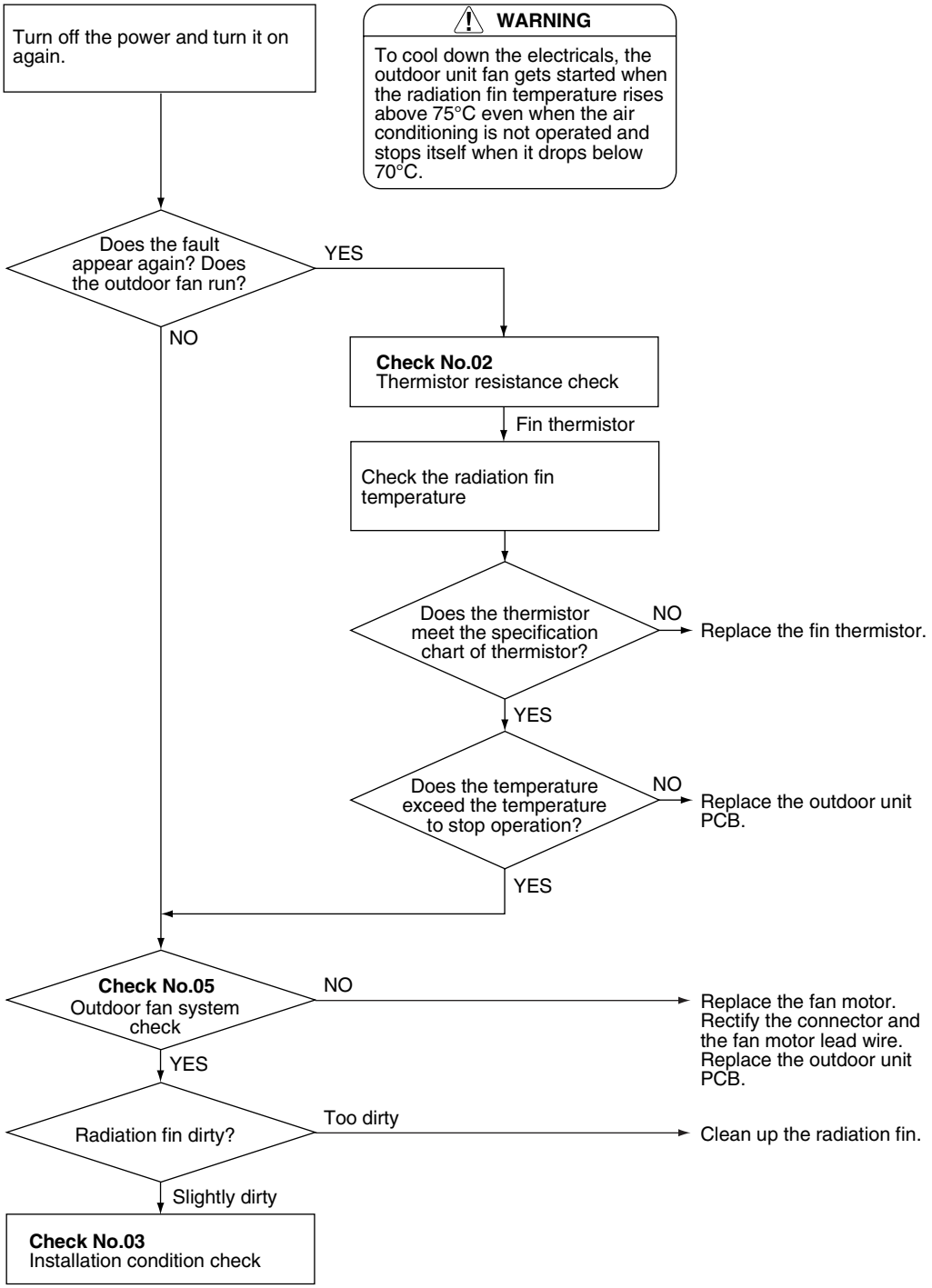


(R9447)

# 2.29 Temperature Rise in Radiation Fin

**Remote Controller Display**

L4

**Method of Malfunction Detection**

Temperature rise in the radiation fin is identified based on the temperature of the radiation fin detected by the fin thermistor with the compressor on.

**Malfunction Decision Conditions**

- The compressor stops when the radiation fin temperature is 86 °C or more. (Fault condition is cleared when the radiation fin temperature is below 72 °C.)
- Shut down when the error occurs repeatedly
- Clear condition : Continuous operation for 60 minutes

**Supposed Causes**

- Fin temperature rise due to defective outdoor fan
- Fin temperature rise due to short circuit
- Detection error due to defective fin thermistor
- Detection error due to improper connection of connector
- Detection error due to defective outdoor unit PCB
- Silicon grease is not applied properly on the heat radiation fin after replacing outdoor unit PCB

## Troubleshooting

Check No.02
Refer to P.169

Check No.03
Refer to P.170

Check No.05
Refer to P.170

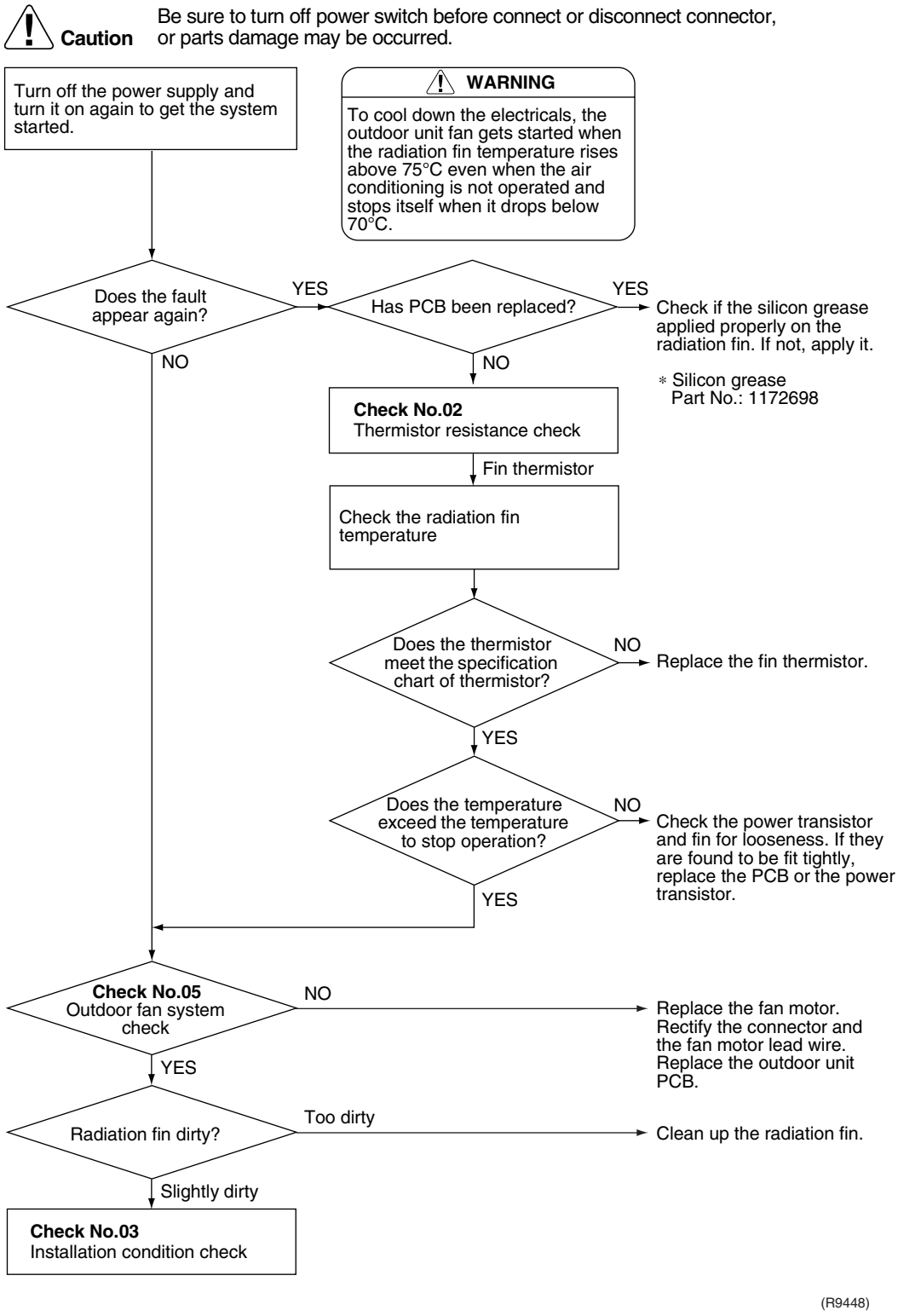


**Note:** Refer to “1.3 Application of silicon grease to a power transistor and a diode bridge” on P. 257.

# 2.30 Output Overcurrent

| | |
|---|---|
| **Remote Controller Display** | L5 |
| **Method of Malfunction Detection** | An output overcurrent is detected by checking the current that flows in the inverter DC section. |
| **Malfunction Decision Conditions** | ■ A position signal error occurs while the compressor is running.<br>■ A speed error occurs while the compressor is running.<br>■ The unit shuts down when the signal of output overcurrent is sent repeatedly from the output overcurrent detection circuit to the microcomputer.<br>■ Clear condition: The unit continuously runs for about 11 minutes. (without fault) |
| **Supposed Causes** | ■ Overcurrent due to defective power transistor<br>■ Overcurrent due to wrong internal wiring<br>■ Overcurrent due to abnormal supply voltage<br>■ Overcurrent due to defective PCB<br>■ Detection error due to defective PCB<br>■ Overcurrent due to closed stop valve<br>■ Overcurrent due to defective compressor<br>■ Overcurrent due to poor installation condition |

## Troubleshooting

Check No.03
Refer to P.170

Check No.14
Refer to P.173

Check No.15
Refer to P.174

Check No.16
Refer to P.175

**Caution** Be sure to turn off power switch before connect or disconnect connector, or parts damage may be occurred.

* Output overcurrent may caused by improper wiring inside the unit. If the unit stops due to output overcurrent after connecting or disconnecting wires to replace part, check wiring for proper connection.

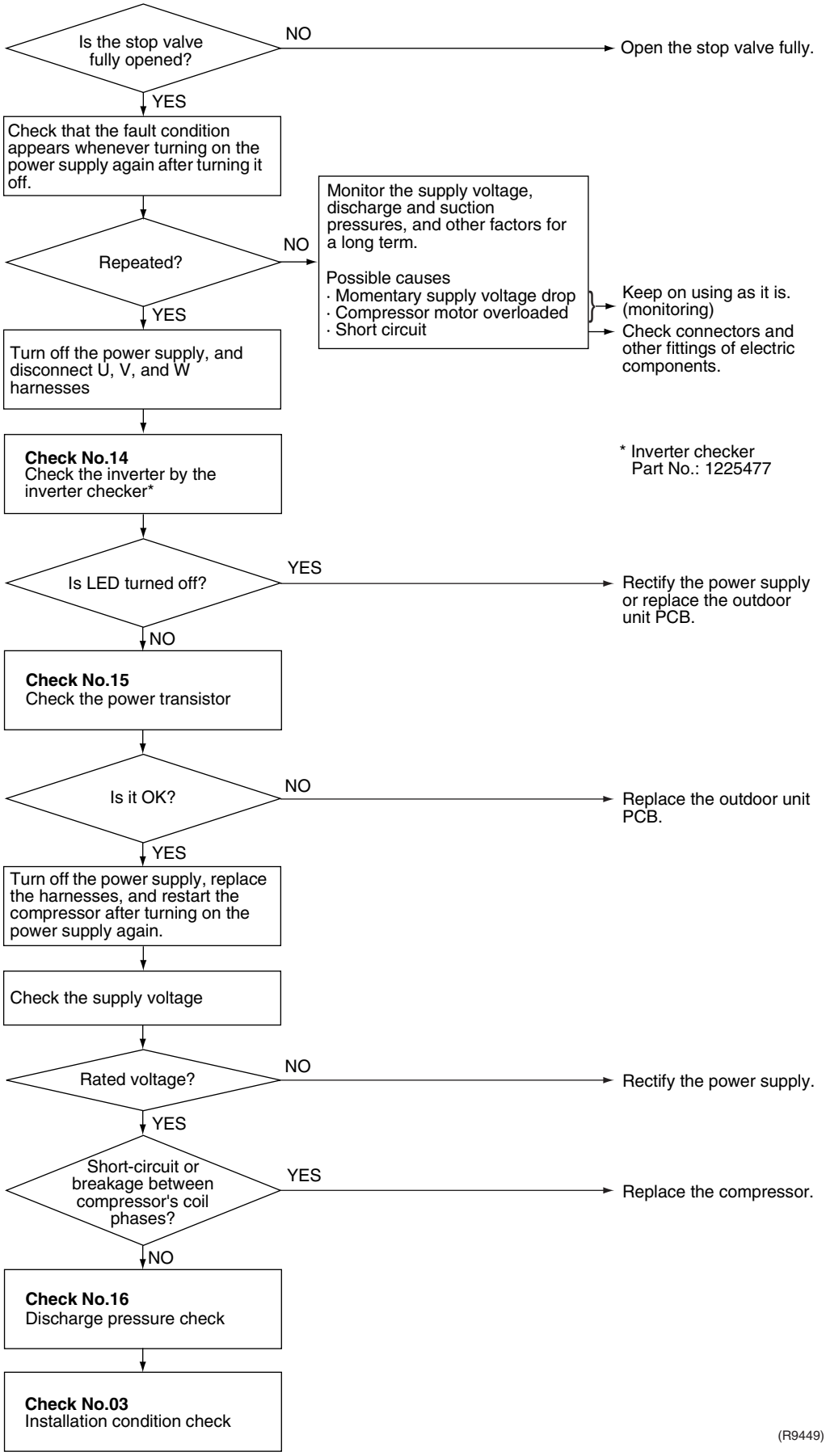

# 2.31 Refrigerant Shortage

**Remote Controller Display**

U0

**Method of Malfunction Detection**

**Refrigerant shortage detection I:**
Refrigerant shortage is detected by checking the input current value and the compressor running frequency. If the refrigerant is short, the input current is smaller than the normal value.

**Refrigerant shortage detection II:**
Refrigerant shortage is detected by checking the discharge pipe temperature and the opening of the electronic expansion valve. If the refrigerant is short, the discharge pipe temperature tends to rise.

**Malfunction Decision Conditions**

**Refrigerant shortage detection I:**
**40 class**
The following conditions continue for 7 minutes.
- Input current × input voltage ≤ 2111 / 256 × output frequency – 361 (W)
- Output frequency > 51 (Hz)

**50 class**
The following conditions continue for 7 minutes.
- Input current × input voltage ≤ 4628 / 256 × output frequency – 608 (W)
- Output frequency > 48 (Hz)

**Refrigerant shortage detection II:**
The following conditions continue for 80 seconds.
- Target opening of the electronic expansion valve ≥ 450 (pulse)
- Discharge pipe temperature > 128 / 128 × target discharge pipe temperature +20 (°C)

If a refrigerant shortage error takes place 4 times successively, the system is shut down. The error counter resets itself if this or any other error does not occur during the following 60-minute compressor running time (total time).

**Supposed Causes**

- Refrigerant shortage (refrigerant leakage)
- Refrigerant heat exchanger drift
- Poor compression performance of compressor
- Closed stop valve
- Defective electronic expansion valve

## Troubleshooting

**Check No.02**
**Refer to P.169**

**Check No.17**
**Refer to P.176**

**Caution** Be sure to turn off power switch before connect or disconnect connector, or parts damage may be occurred.

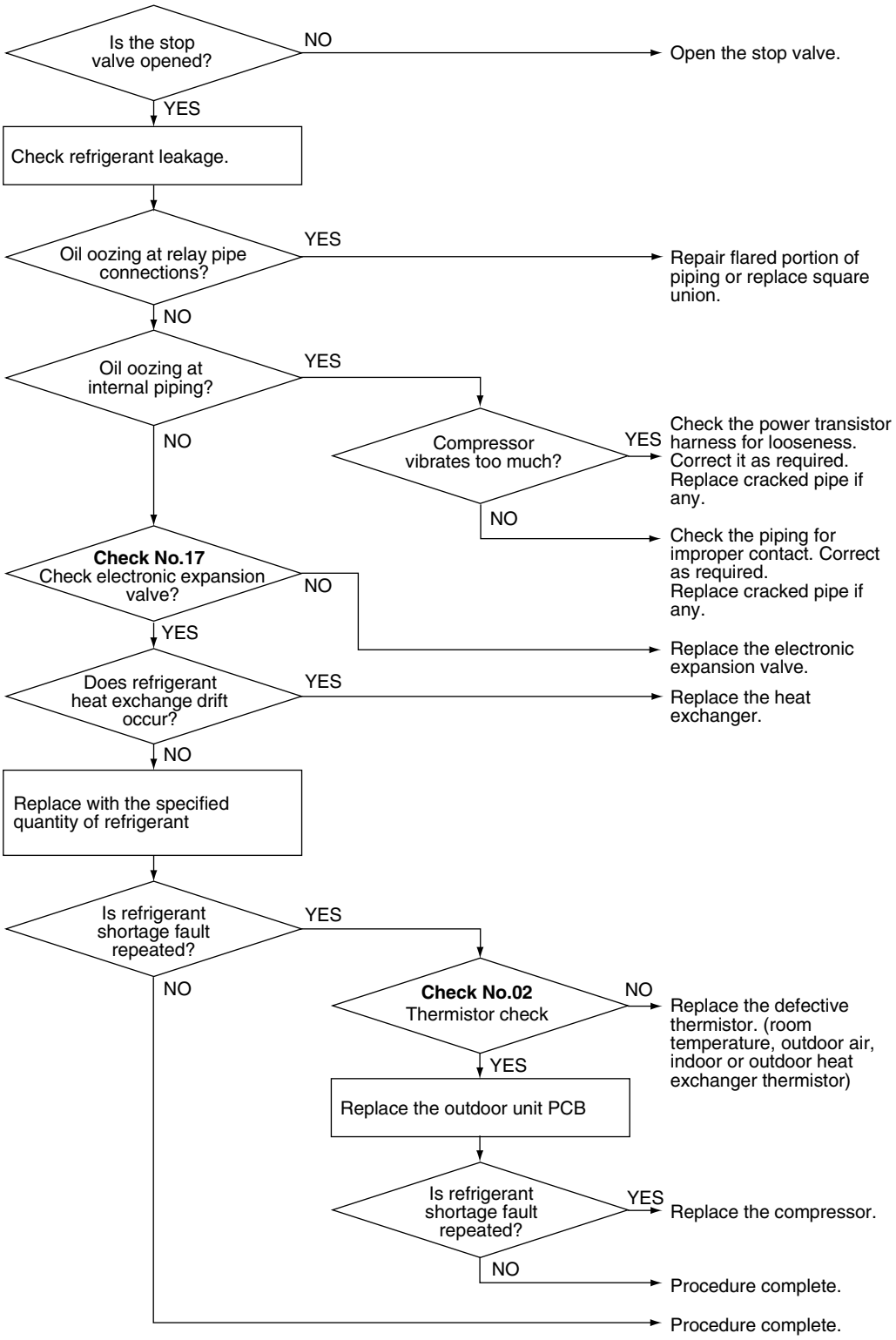


(R9450)

# 2.32 Over Voltage Protection / Low Voltage Protection

**Remote Controller Display**

UP

**Method of Malfunction Detection**

Detect an abnormal increase or drop of voltage by the over voltage detection circuit or DC voltage detection circuit.

**Malfunction Decision Conditions**

- When an over voltage signal is sent to the microcomputer from the over voltage detection circuit, or the voltage detected by DC voltage detection circuit is less than 150 V and that voltage continues for about 0.1 second.
- The unit shuts down if the fault conditions occurs repeatedly.
- Fault counter is reset when the unit continuously runs for 11 minutes without fault.

**Supposed Causes**

- Abnormal supply voltage, momentary power failure
- Defective over voltage detector or defective DC voltage detection circuit
- Failure in PAM controlled parts
- Short circuit inside the fan motor winding.

**Troubleshooting**

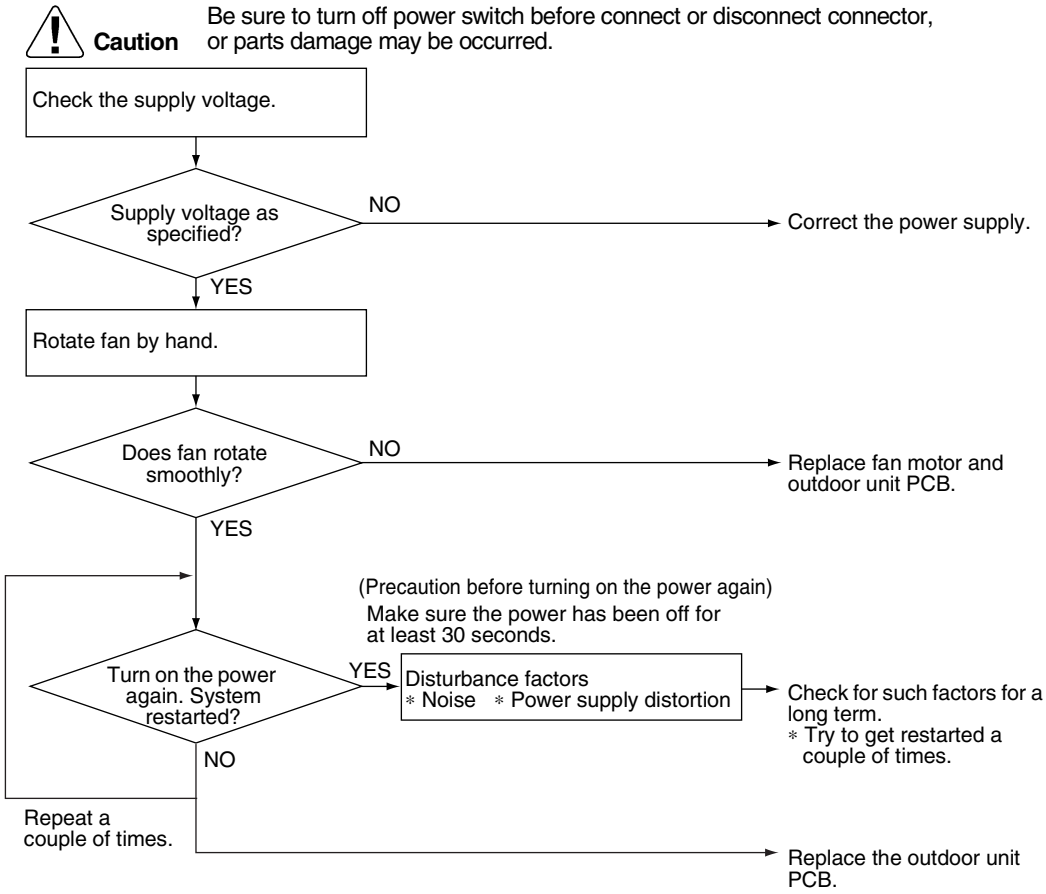

# 2.33 Outdoor Unit PCB Abnormality or Communication Circuit Abnormality

| | |
|---|---|
| **Remote Controller Display** | U4 |
| **Method of Malfunction Detection** | Detect within the program of the microcomputer that the program is in good running order. |
| **Malfunction Decision Conditions** | 1. When the program of the microcomputer is in bad running order.<br>2. When indoor-outdoor unit signal transmission can not be performed for more than 15 seconds.<br>3. When zero-cross signal can not be detected for more than 10 seconds. |
| **Supposed Causes** | ■ Display disabled due to power supply fault<br>■ Communication circuit fault in outdoor unit PCB<br>■ Out of control of microcomputer caused by external factors<br>● Noise<br>● Momentary voltage drop<br>● Momentary power loss<br>■ Defective outdoor unit PCB<br>■ Defective thermal fuse in outdoor terminal board |

## Troubleshooting

**Caution** Be sure to turn off power switch before connect or disconnect connector, or parts damage may be occurred.

Check indoor unit also, because a communication circuit fault may be caused by the problem related to the indoor unit.

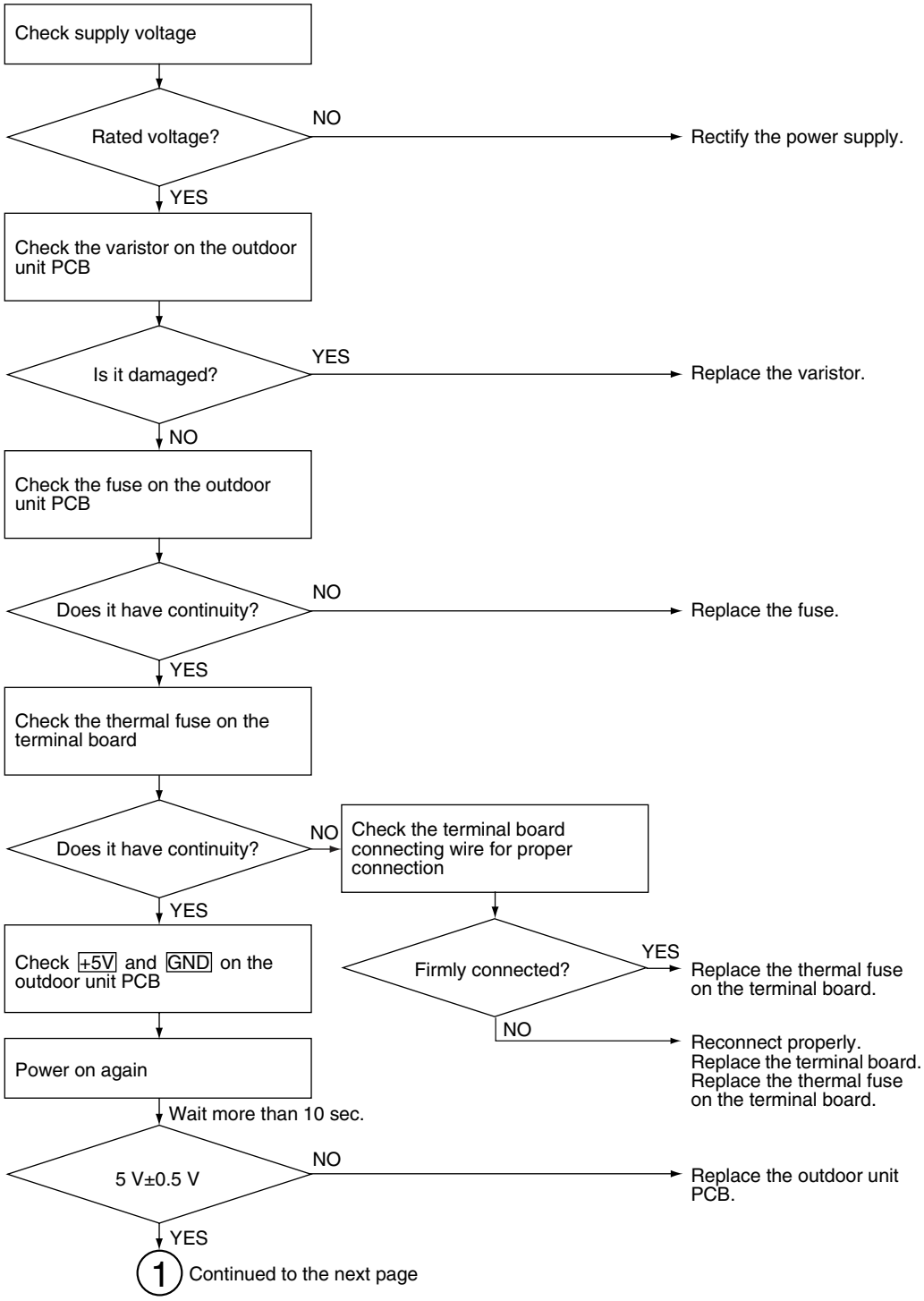


(R9452)

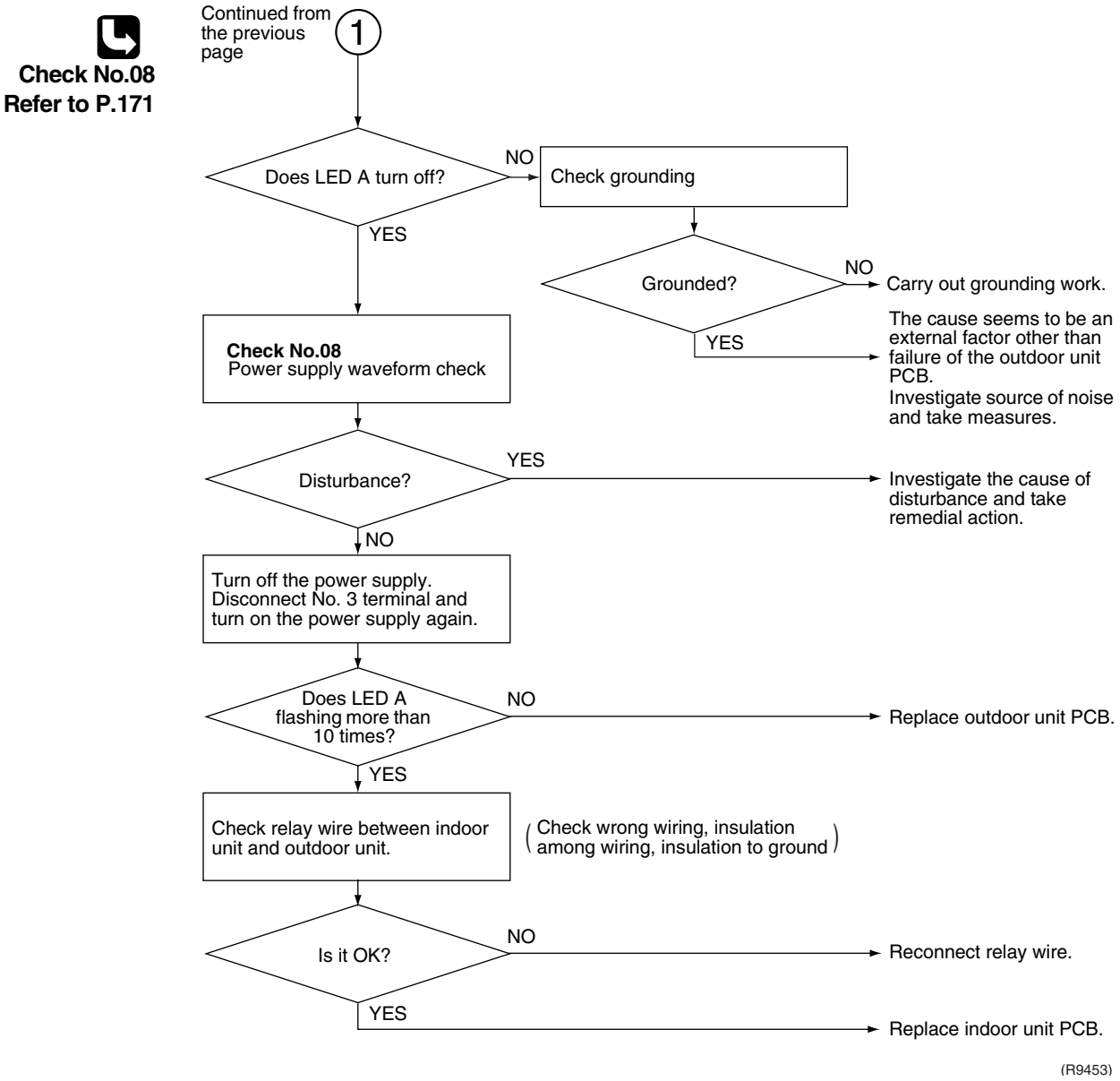
Check No.08
Refer to P.171
Continued from the previous page
1
Does LED A turn off?
NO
Check grounding
YES
Grounded?
NO
Carry out grounding work.
YES
The cause seems to be an external factor other than failure of the outdoor unit PCB.
Investigate source of noise and take measures.
Check No.08
Power supply waveform check
Disturbance?
YES
Investigate the cause of disturbance and take remedial action.
NO
Turn off the power supply.
Disconnect No. 3 terminal and turn on the power supply again.
Does LED A flashing more than 10 times?
NO
Replace outdoor unit PCB.
YES
Check relay wire between indoor unit and outdoor unit.
(Check wrong wiring, insulation among wiring, insulation to ground)
Is it OK?
NO
Reconnect relay wire.
YES
Replace indoor unit PCB.
(R9453)

# 2.34 Signal Transmission Error on Outdoor Unit PCB

| | |
|---|---|
| **Remote Controller Display** | U7 |
| **Method of Malfunction Detection** | Communication error between microcomputer mounted on the main body and inverter. |
| **Malfunction Decision Conditions** | ■ When the data sent from the microcomputer of the inverter can not be received successively for 9 seconds, the unit shuts down.<br>■ Fault counter is reset when the data from the microcomputer of the inverter can be successfully received. |
| **Supposed Causes** | ■ Defective outdoor unit PCB<br>■ Disconnection or breakage of harness between PCBs |

## Troubleshooting

**Caution** Be sure to turn off power switch before connect or disconnect connector, or parts damage may be occurred.

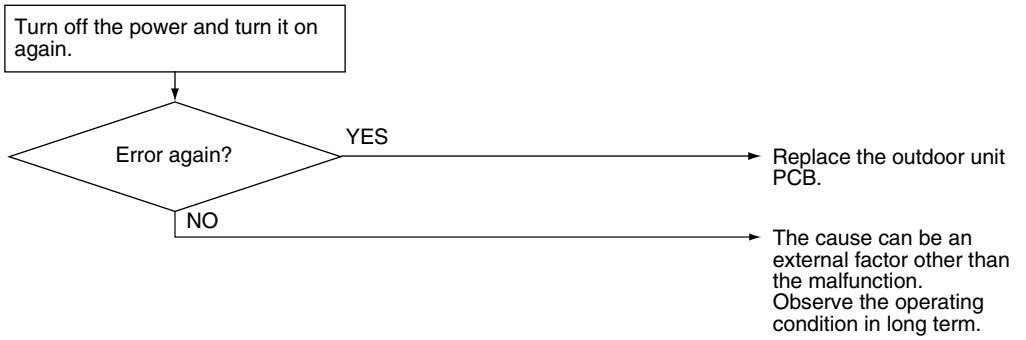


(R9454)

# 2.35 Fan Motor System Abnormality / Fan Lock

**Remote Controller Display**

P9

**Method of Malfunction Detection**

During humidifying fan motor running, fan motor system abnormality is identified based on the fan speed (rpm) detected by Hall IC.

**Malfunction Decision Conditions**

<Humidifying fan>
When fan speed does not reach 100 rpm within 12 seconds after fan motor start up.

**Supposed Causes**

<Humidifying fan>
- Defective motor (Hall IC) for humidifying fan
- Breakage of relay harness or loose connector
- Detection fault of fan speed due to defective outdoor unit PCB

**Troubleshooting**

**Check No.23**
**Refer to P.177**

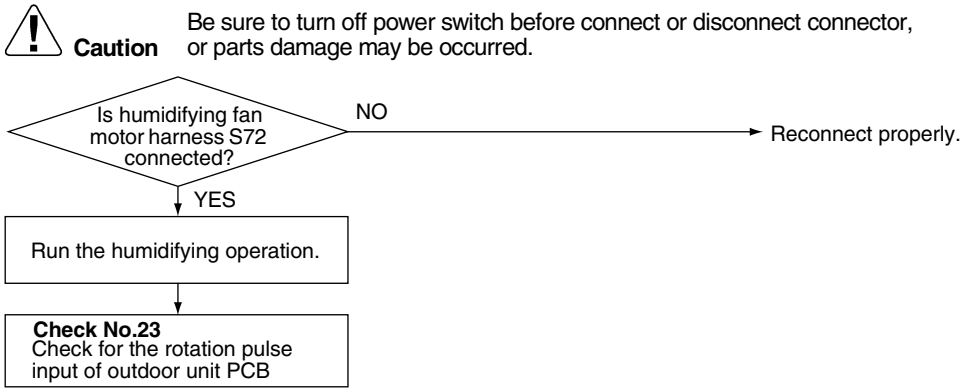


(R10340)

# 2.36 Heater Wire Abnormality

| | |
|---|---|
| **Remote Controller Display** | PA |
| **Method of Malfunction Detection** | A fault is identified when the outlet temperature of humidifying fan does not reach a certain temperature within a given time after the heater turned on. |
| **Malfunction Decision Conditions** | When the temperature detected by the thermistor is lower than the outdoor temperature (at heater turned off) + 5°C, and this condition continues for 30 minutes. |
| **Supposed Causes** | ■ Breakage of heater filament<br>■ Breakage of heater harness<br>■ Abnormal temperature detected by outdoor temperature thermistor<br>■ Abnormal temperature detected by humidification fan outlet thermistor<br>■ Damaged main relay<br>■ Blown thermal fuse<br>■ Damaged heater control part<br>■ Extremely low voltage |

## Troubleshooting

**Check No.02**
**Refer to P.169**

**Caution** Be sure to turn off power switch before connect or disconnect connector, or parts damage may be occurred.

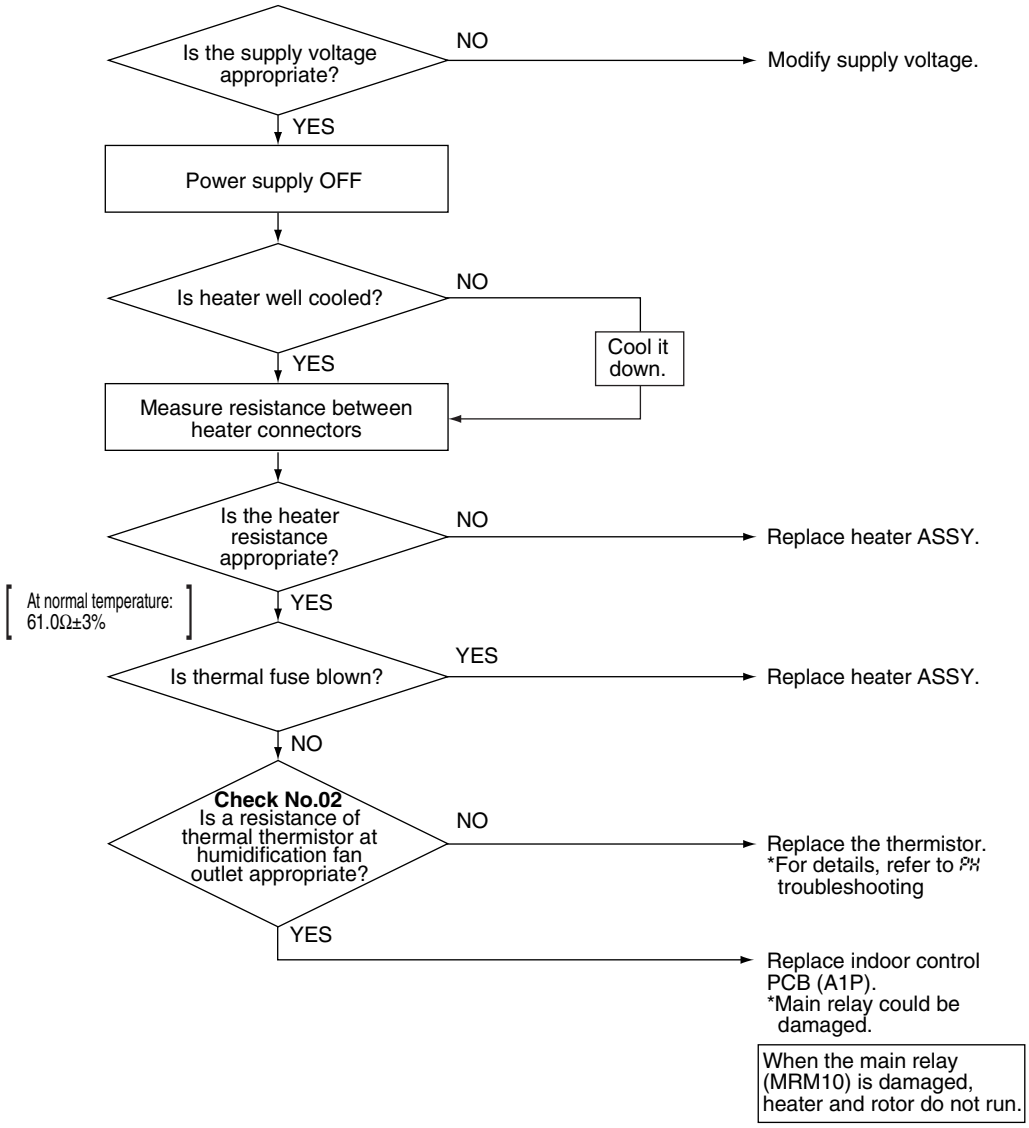


(R9456)

# 2.37 Humidifying Fan Outlet Thermistor Abnormality / Heater Temperature Abnormality

| | |
|---|---|
| **Remote Controller Display** | PH |
| **Method of Malfunction Detection** | Detect short circuit and wire breakage of humidification thermistor.<br>When humidifying fan outlet temperature becomes high, this condition is identified as an abnormal heater temperature fault. |
| **Malfunction Decision Conditions** | When power is supplied and the thermistor input is 4.92 V or more, or 0.06 V or less.<br>If the humidifying fan outlet temperature is more than 90°C, this condition is identified as abnormal heater temperature fault. |
| **Supposed Causes** | ■ Short circuit and wire breakage of humidifying thermistor<br>■ Disconnected connector<br>■ Heater has a high power<br>■ Thermistor temperature detection error<br>■ Defective rotor motor<br>■ Defective hygroscopic fan motor<br>■ Defective heater control part<br>■ Defective humidifying fan |

## Troubleshooting

Check No.02
Refer to P.169

Check No.05
Refer to P.170

**Caution** Be sure to turn off power switch before connect or disconnect connector, or parts damage may be occurred.

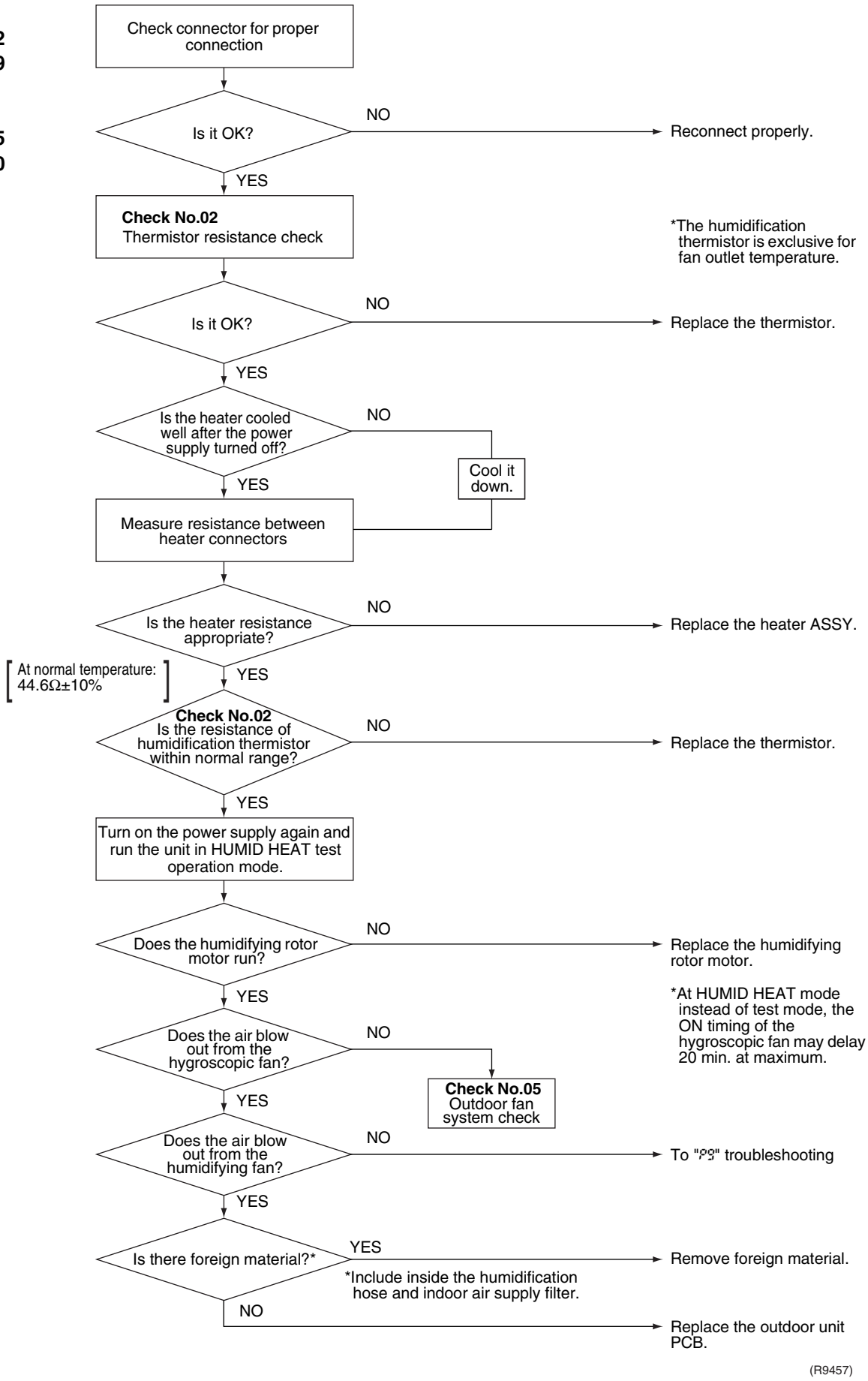

# 2.38 Lights-out of Microcomputer Status Lamp

**Remote Controller Display**

—

**Method of Malfunction Detection**

When a microcomputer fault is detected, LED A turns off.

**Malfunction Decision Conditions**

**Supposed Causes**

- Outdoor unit PCB is not power supplied
- Power supply failure due to noise

**Troubleshooting**

**Caution** Be sure to turn off power switch before connect or disconnect connector, or parts damage may be occurred.

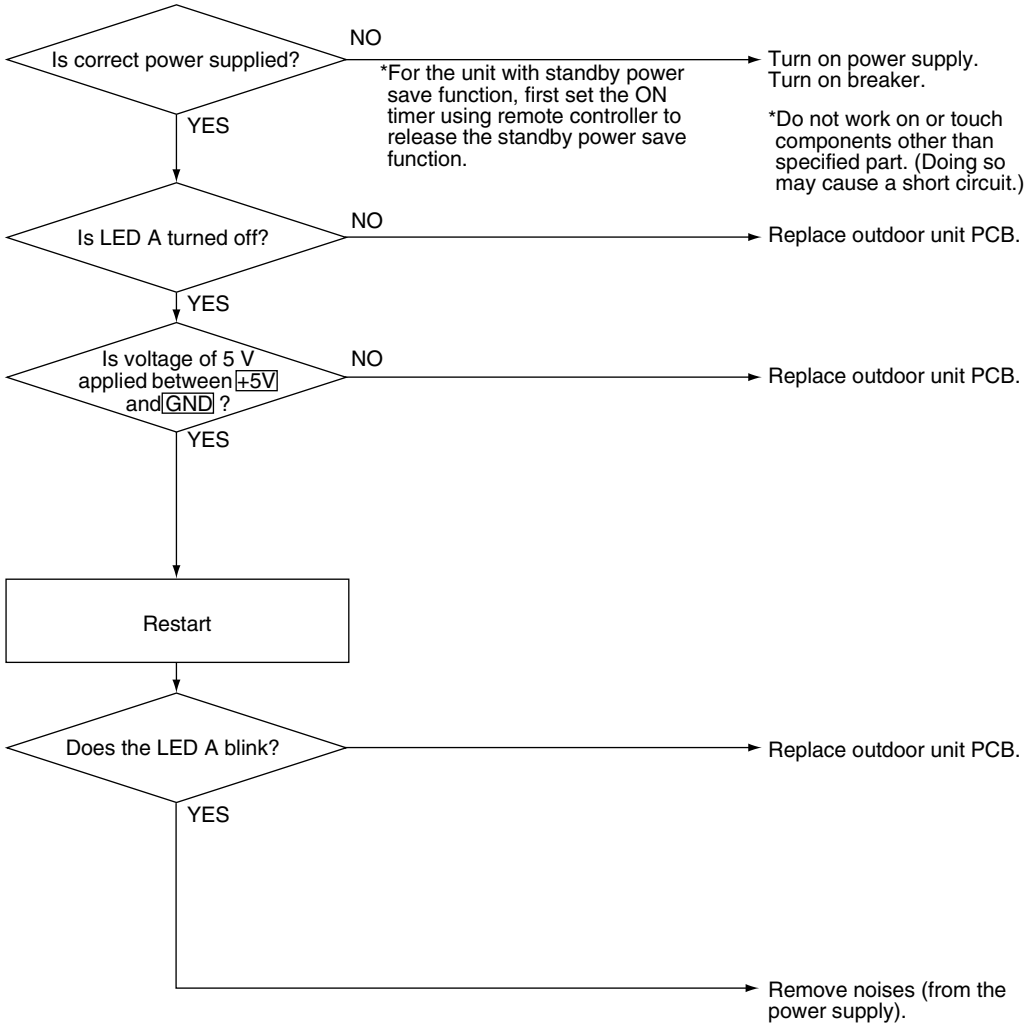


(R9458)

# 3. Check

## 3.1 Fan Motor Connector Output Check

**Check No.01**

1. Check connector connection.
2. Check motor power supply voltage output (pins 4-7).
3. Check motor control voltage (pins 4-3).
4. Check rotation command voltage output (pins 4-2).
5. Check rotation pulse input (pins 4-1).

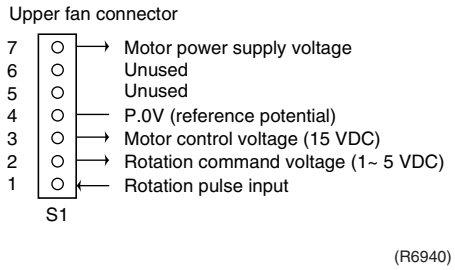

# 3.2 Thermistor Resistance Check

**Check No.02**

Remove the connectors of the thermistors on the PCB, and measure the resistance of each thermistor using tester.
The relationship between normal temperature and resistance is shown in the graph and the table below.

| Thermistor<br>Temperature (°C) | R25°C=20kΩ B=3950 |
|---|---|
| –20 | 211.0 (kΩ) |
| –15 | 150 |
| –10 | 116.5 |
| –5 | 88 |
| 0 | 67.2 |
| 5 | 51.9 |
| 10 | 40 |
| 15 | 31.8 |
| 20 | 25 |
| 25 | 20 |
| 30 | 16 |
| 35 | 13 |
| 40 | 10.6 |
| 45 | 8.7 |
| 50 | 7.2 |

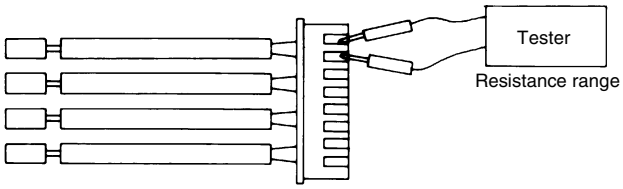


( R25=20kΩ, B=3950 )

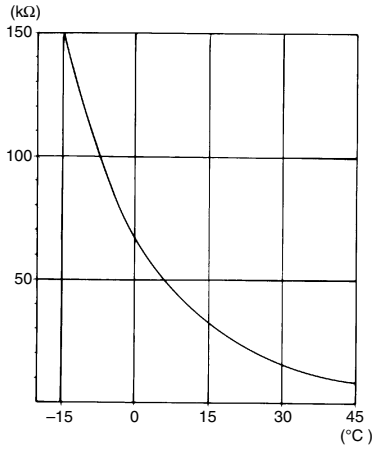


(R1437)

■ For the models in which the thermistor is directly mounted on the PCB.

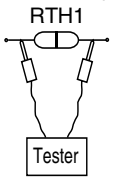


(R3460)

# 3.3 Installation Condition Check

**Check No.03**

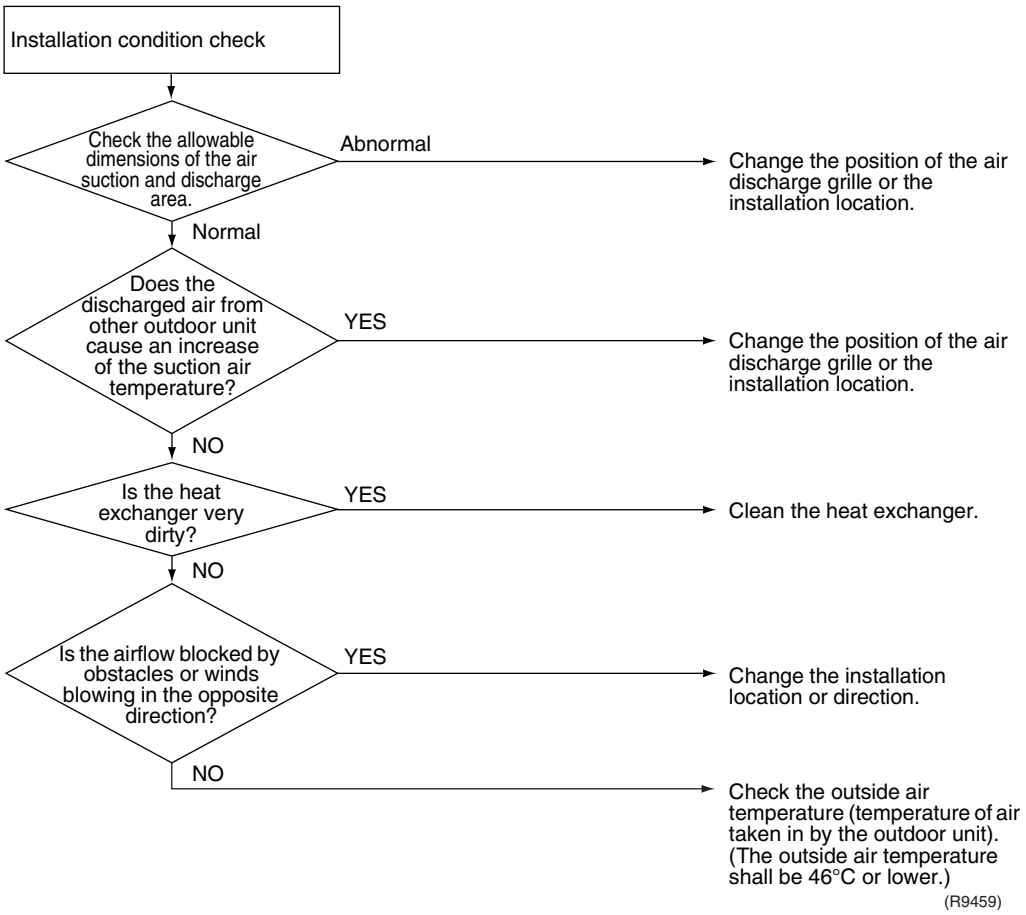


# 3.4 Outdoor Fan System Check (DC Motor)

**Check No.05**

**Check No.23**
**Refer to P.177**

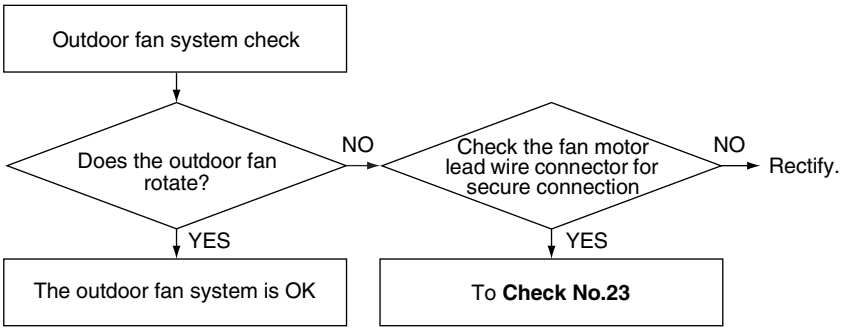


(R9460)

# 3.5 Power Supply Waveform Check

**Check No.08**

Check the voltage waveform between power supply terminals on the terminal board for disturbance using oscillo-tester.

- Check to see if the power supply waveform is a sine wave (Fig.1).
- Check to see if there is waveform disturbance near the zero cross (sections circled in Fig.2)

[Fig.1]

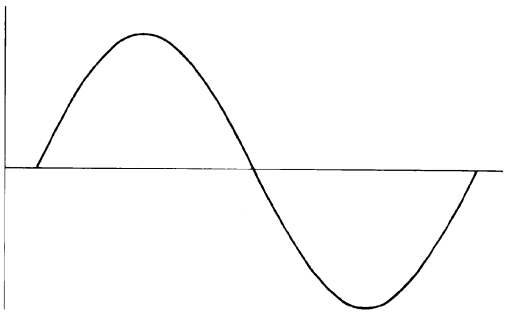

(R1736)

[Fig.2]

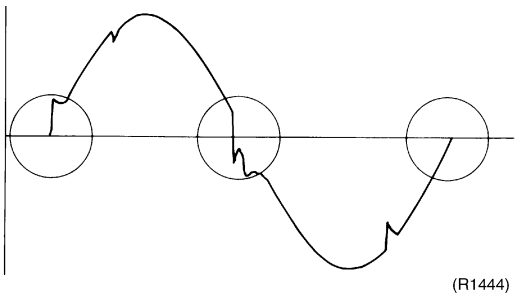

(R1444)

# 3.6 Main Circuit Electrolytic Capacitor Check

**Check No.11**

- Do not touch the live parts within 10 minutes after the breaker is turned off.
- Even after that, when you touch the parts, check that there is no DC voltage with a tester.
- Check the continuity with a tester. It is OK if the tester shows good continuity when pins are replaced.

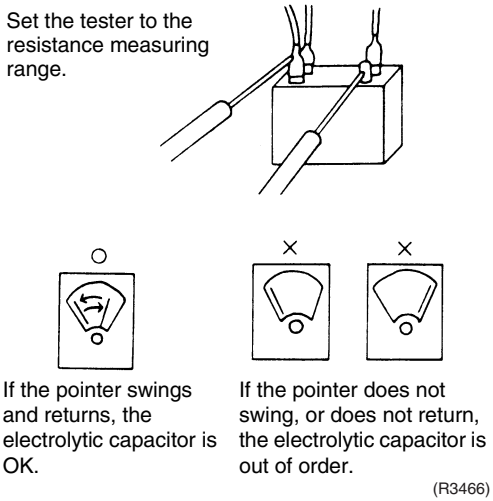

# 3.7 Refrigerant System Check

**Check No.12**

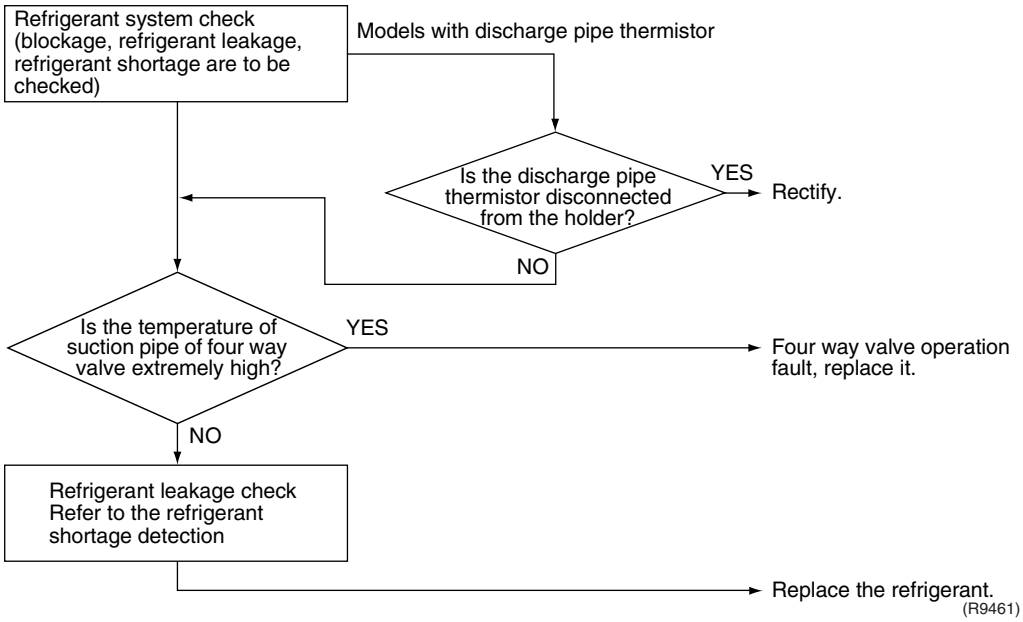

# 3.8 “Inverter Checker” Check

**Check No.14**

**1. Characteristics**

If abnormal stop occurs due to compressor startup failure or overcurrent output when using inverter unit, it is difficult to judge whether it is caused by the compressor failure or other failure (control PCB, power transistor, etc.). The inverter analyzer makes it possible to judge the cause of trouble easily and securely. (Connect this analyzer as a quasi-compressor instead of compressor and check the output of inverter)

**2. Operation Method**

1) Be sure to turn the power off.
2) Install the inverter analyzer instead of a compressor.

Note: Make sure the charged voltage of the built-in smoothing electrolytic capacitor drops to 10 VDC or below before carrying out the service work.

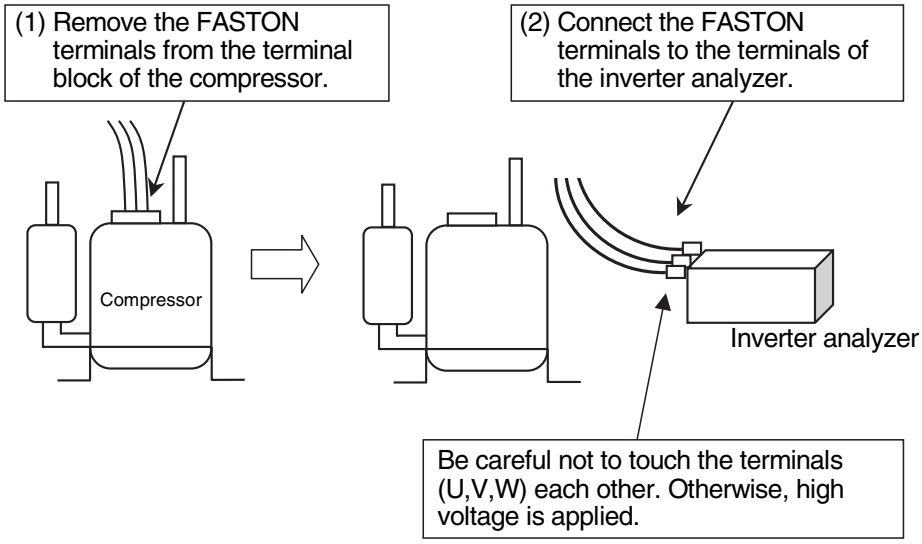


Reference

If the connector terminal of compressor is not a FASTON terminal (difficult to remove the wire on the terminal), it is possible to connect a wire available on site to the unit from output side of PCB. (Do not connect it to the compressor at the same time, otherwise it may result in incorrect detection.)

■ How to activate inverter test mode

1) Turn the power on.
2) Press the 3 buttons (TEMP▲, TEMP▼, MODE) on the remote controller simultaneously.
3) Press TEMP▲ or ▼ button and select 7.
4) Press the MODE button to enter the trial operation mode.
5) Press the MODE button and select FAN mode.
6) Press the ON/OFF button to start inverter test.

**3. Diagnose method (Diagnose can be made according to 6 LEDs lighting status as follows:)**

(1) When all LEDs are lit uniformly, → Compressor malfunction (to be replaced)

(2) When some of LEDs are not lit (LEDs are not lit or go off, etc.):
Check the individual power transistor. (Refer to check No.15)

∗ When the power transistor and control PCB are integrated :
→ Replace the control PCB.

∗ When the power transistor can be checked individually :
↓ Check the resistance value. (Refer to check No.15)

If NG : → The power transistor may have a failure. (Replace the power transistor).

If the power transistor is normal, check if there is any solder cracking on the filter PCB.

∗ If any solder cracking is found: → Replace the filter PCB (or repair the soldered section).

∗ If the filter PCB is normal: → Replace the control PCB.

**Caution**

① When the output frequency is low, the LED flashes slowly. As the frequency increases, the LED flashes quickly. (It looks like the LED is lit)

② If the operation is carried out with no load (the condition of the compressor is disconnected), some of units may stop operation with “CT system error” (due to no electric current) or “startup failure” (because the compressor does not turn). In this case, check if the LED is flashing during “operation” to “malfunction stop”. (Refer to the service manual of each air conditioner for checking whether the alarm LEDs for CT system, startup failure, etc. are provided or not.)

③ On completion of diagnose by this checker, be sure to re-crimp the FASTON terminal for resetting the system.
(Otherwise, the terminal may be burned due to loosening.)

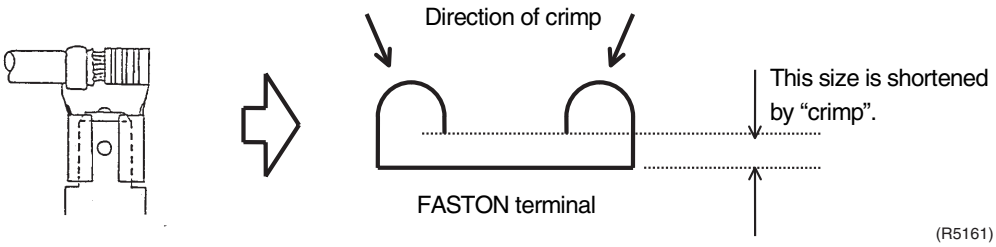


# 3.9 Power Transistor Check

**Check No.15**

- Do not touch the live parts within 10 minutes after the breaker is turned off.
- Even after that, when you touch the parts, check to see that supply voltage of the power transistor is less than 50 V with a tester.
- Measure resistance at connector terminal on PCB or at the relay connector.

| | | | | |
|---|---|---|---|---|
| (–) terminal of a tester | Power transistor (+) | UVW | Power transistor (–) | UVW |
| (+) terminal of a tester | UVW | Power transistor (+) | UVW | Power transistor (–) |
| Resistance in OK | several kΩ~several MΩ | | | |
| Resistance in NG | 0 or ∞ | | | |

# 3.10 Discharge Pressure Check

**Check No.16**

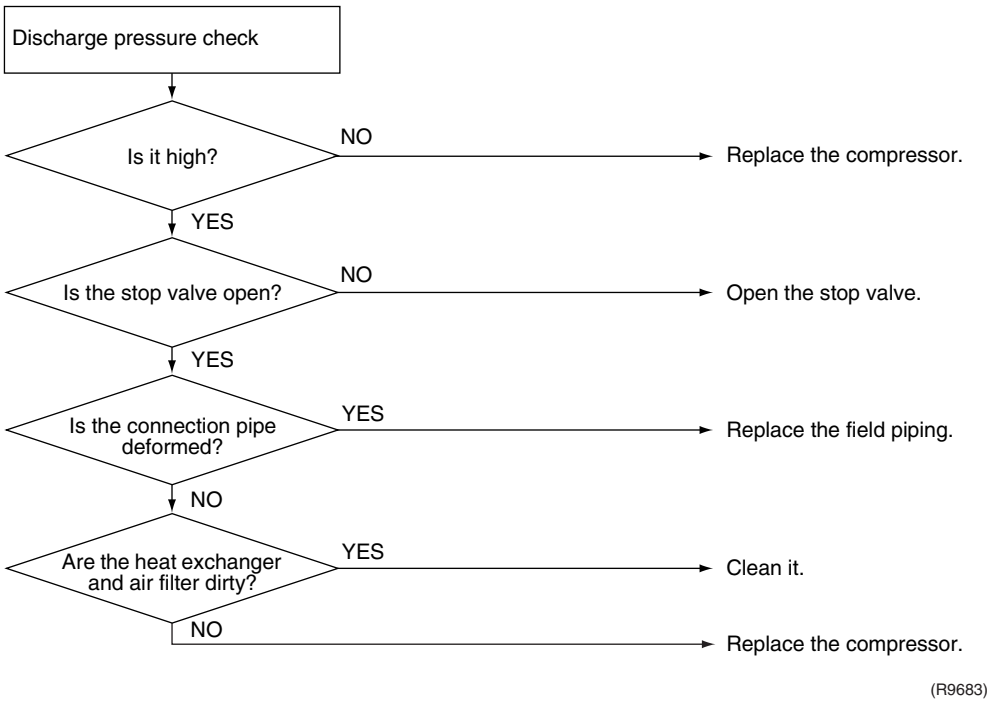

# 3.11 Electronic Expansion Valve Check

**Check No.17**

Check the electronic expansion valve (EV) as follows:

1. Check if the EV connector properly inserted into the control PCB. Collate the number of EV main body with that of the connector.
2. Check to see that clatter (latching sound) is heard from all of the EVs when turning on the power supply again after turning it off.
3. If there are EVs which do not sound clatter, disconnect the connectors of these EVs and check them for continuity.

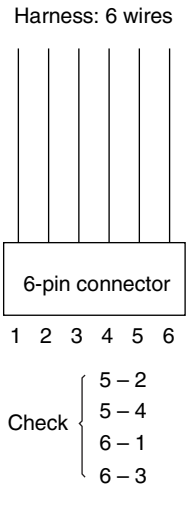


4. If there is no clatter (latching sound) on all of the EVs in step 2, the outdoor PCB is defective.
5. For EVs for which continuity is established in step 3, connect the coil which sounded clatter to the EV main body which did not sound, and make sure the latching sound be heard again.
   If latching sound is heard, outdoor unit PCB is defective.
   If there is no latching sound, the EV main body is defective.

**Note** Latching sound varies by each valve.

# 3.12 Rotating Pulse Input on Outdoor Unit PCB Check

**Check No.23**

**< For outdoor fan motor or humidifying fan motor>**

■ Outdoor fan motor

Make sure that the voltage of 270 ± 30 V is applied.

1. Set operation OFF and power OFF. Remove the connector S70.
2. Check that the voltage between the pins 4-7 is 270 VDC.
3. Check that the control voltage between the pins 3-4 is 15 VDC.
4. Check that the rotation command voltage between the pins 2-4 is 5 VDC.
5. Keep operation OFF and power OFF. Connect the connector S70.
6. Check whether 2 pulses (0 - 15 V) are output at the pins 1-4 when the fan motor is rotated 1 turn by hand.

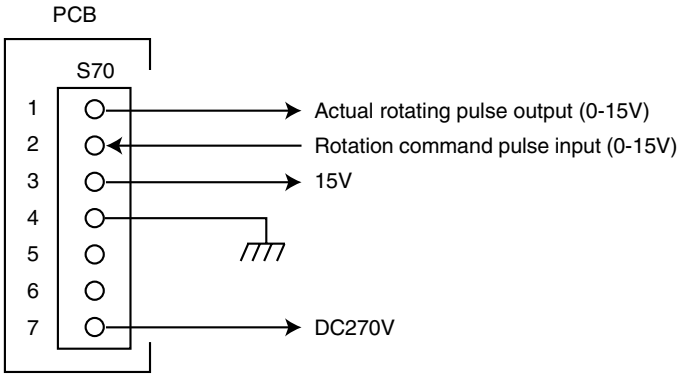


(R10759)

■ Humidifying fan motor

Make sure that the voltage of 270 ± 30 V is applied.

1. Set operation OFF and power OFF. Remove the connector S72.
2. Check that the voltage between the pins 5-8 is 270 VDC.
3. Check that the control voltage between the pins 4-5 is 15 VDC.
4. Check that the rotation command voltage between the pins 3-5 is 5 VDC.
5. Keep operation OFF and power OFF. Connect the connector S72.
6. Check whether 2 pulses (0 - 15 V) are output at the pins 2-5 when the fan motor is rotated 1 turn by hand.

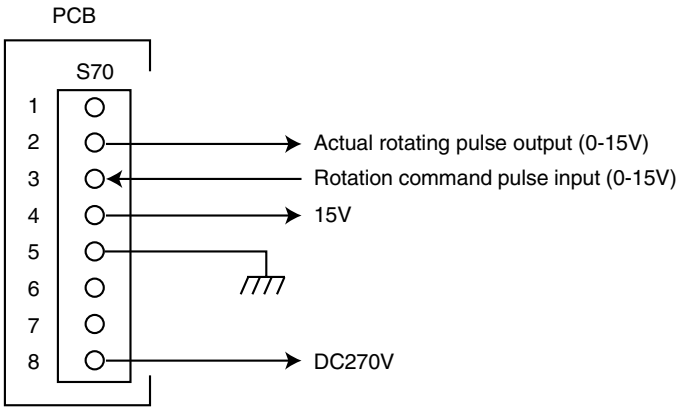


(R10760)

Fuses are commonly used as follows. Refer to the corresponding wiring diagram.

| | |
|---|---|
| FU1 | SW power supply<br>Hygroscopic fan motor |
| FU2 | Outdoor fan motor<br>Humidifying fan motor<br>Four way valve |

When the FU2 is melted, check the outdoor fan motor for proper function.

If NG in step 2 → Defective PCB → Replace the PCB.
If NG in step 4 → Defective Hall IC → Replace the outdoor fan motor.
If OK in both steps 2 and 4 → Replace the PCB.

**<For hygroscopic fan motor>**

Check that the connectors HK1, HK2, HK3 for proper connection.

1. Check that the power supply voltage is applied between HK1 and HK3.

2. If NG in step 1 → Defective PCB → Replace the PCB.

| | |
|---|---|
| FU1 | SW power supply<br>Hygroscopic fan motor |
| FU2 | Outdoor fan motor<br>Humidifying fan motor<br>Four way valve |

When the FU2 is melted, check the rotor motor for proper function.

# 3.13 Main Circuit Short Check

**Check No.29**

- Measure the resistance between pins at both ends of DB1.
- If the resistance is ∞ or less than 1 kΩ, the main circuit short.

| | | | | |
|---|---|---|---|---|
| (–) terminal of the tester (in case of digital, (+) terminal) | (~) | (+) | (~) | (–) |
| (+) terminal of the tester (in case of digital, (–) terminal) | (+) | (~) | (–) | (~) |
| Resistance in OK | several kΩ ~several MΩ | ∞ | ∞ | several kΩ ~several MΩ |
| Resistance in NG | 0 or ∞ | 0 | 0 | 0 or ∞ |

# 3.14 Four Way Valve Performance Check

## Check No.31

< Caution on resetting the power supply >
∗ Be sure to wait for 30 sec. or more after turning off the power supply.

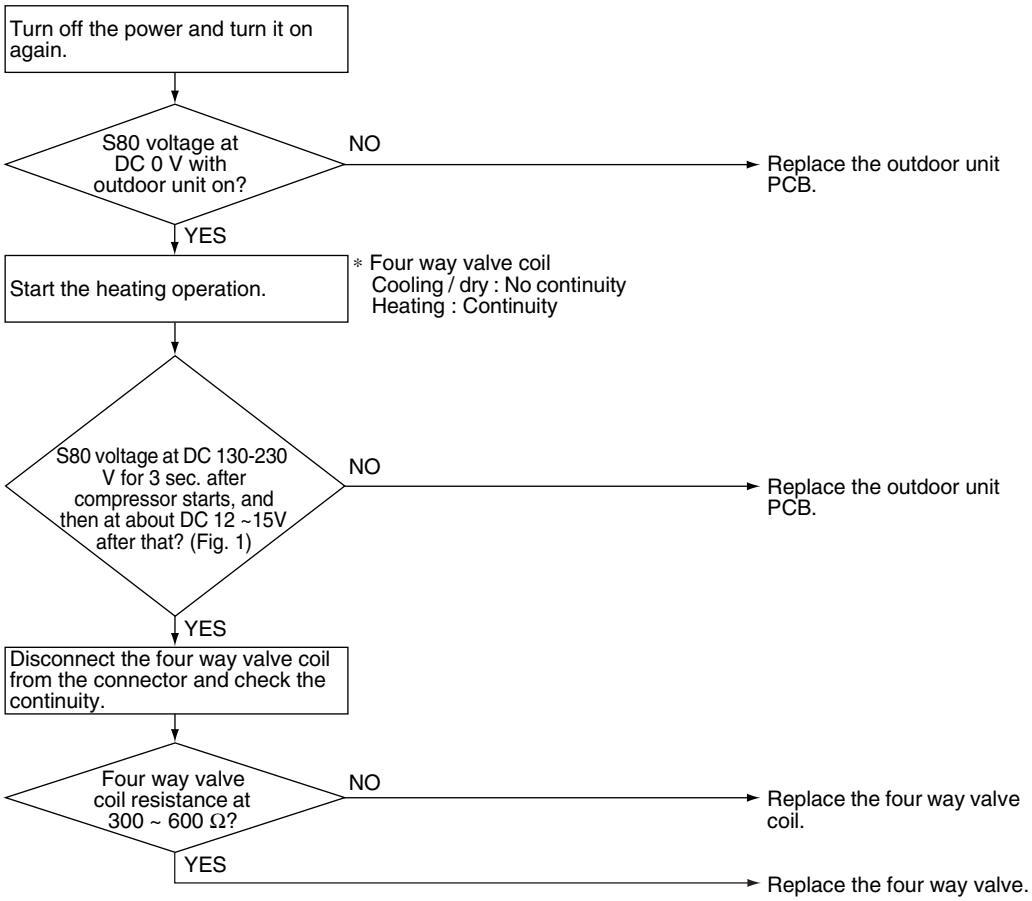


(Fig. 1)

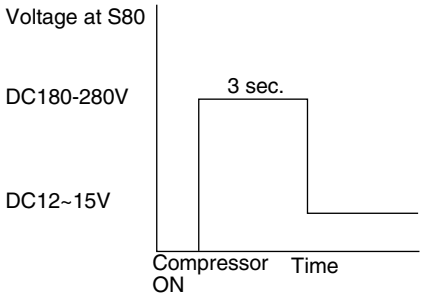


(R9462)

# Part 7
# Removal Procedure

1. Indoor Unit....182
1.1 Removal of Air filter....182
1.2 Removal of Front Panel....185
1.3 Removal of Front Grille....187
1.4 Removal of Horizontal Blades and Vertical Blades....190
1.5 Removal of Electrical Box....194
1.6 Removal of PCB....197
1.7 Removal of the Connecting Duct....202
1.8 Removal of Heat Exchanger....203
1.9 Removal of Swing Motor....206
1.10 Removal of Fan Rotor....210
2. Outdoor Unit....213
2.1 Removal of Humidifier Unit....213
2.2 Removal of Heater ASSY / Humidifying Rotor (Moisture Adsorption Element) / Humidifying Rotor Motor....216
2.3 Removal of Damper Motor....220
2.4 Removal of Limit Switch / Humidifying Thermistor....222
2.5 Removal of the Fan-valve-duct ASSY....225
2.6 Removal of Hygroscopic Fan Rotor / Hygroscopic Fan Motor....227
2.7 Removal of Panels and Plates....228
2.8 Removal of Electrical Box....231
2.9 Removal of PCB....236
2.10 Removal of Sound Blanket....242
2.11 Removal of the Propeller Fan / Fan Motor....245
2.12 Removal of Thermistors....248
2.13 Removal of Compressor....250
2.14 Removal of the Four Way Valve / Electronic Expansion Valve....252

# 1. Indoor Unit

## 1.1 Removal of Air filter

**Procedure**

**Warning** **Be sure to wait 10 minutes or more after turning off all power supplies before disassembling work.**

| Step | Procedure | Points |
|---|---|---|
| 1. Appearance feature | 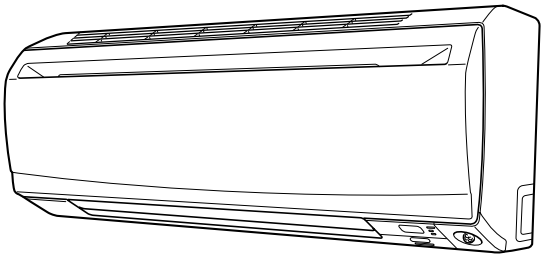 (R10277) 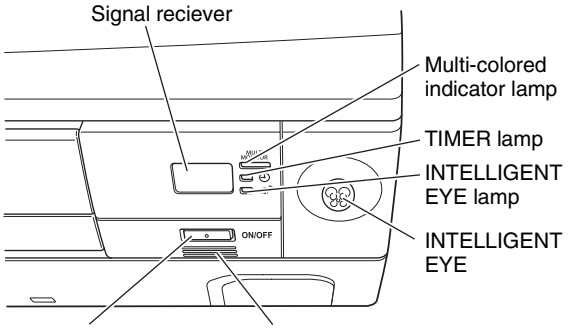  (R10278) | **Warning**<br>**Dangerous: High voltage**<br>**A high voltage is applied to all the electric circuits of this product including thermistors.**<br>■ When a signal from the remote controller is received, the receiving tone sounds and the operation lamp flickers immediately to confirm the signal reception.<br>■ When the ON/OFF switch is kept pressed for 5 seconds, the forced cooling operation is performed for about 15 minutes. |
| 2. Removing the air filter | | |
| 1 Hold the right and left projections of the front panel, and open the panel to the position where it stops. | 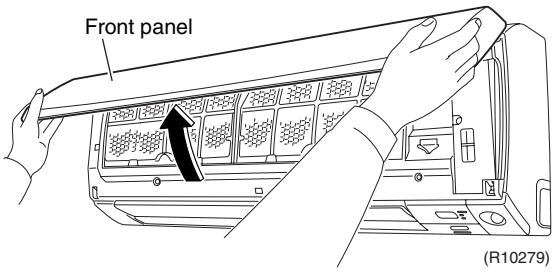  (R10279) | |
| 2 Slightly push up the knob at the center of the air filter and release the hook.<br>3 Pull out the air filter downwards and remove it. | 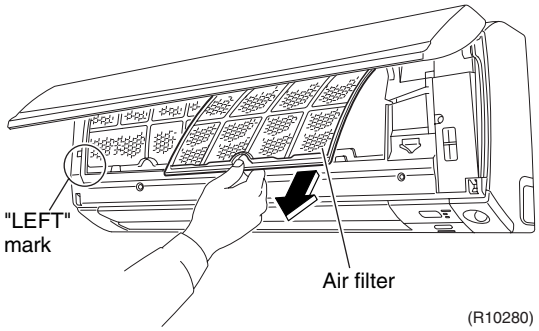  (R10280) | ■ The air filter is marked for difference between the right and left sides.<br>The left filter has the “LEFT” mark.<br>■ Insert the air filter with the "FRONT" mark faced up.<br>■ The air filter can be set easily by inserting it along the guides.<br>■ Be sure to insert the hooks (at 2 lower positions) when mounting the air filter. |

| Step | Procedure | | Points |
|---|---|---|---|
| 3. | Removing the titanium apatite photocatalytic air-purifying filter | | |
| 1 | The titanium apatite photocatalytic air-purifying filter is attached to the back of the air filter. | 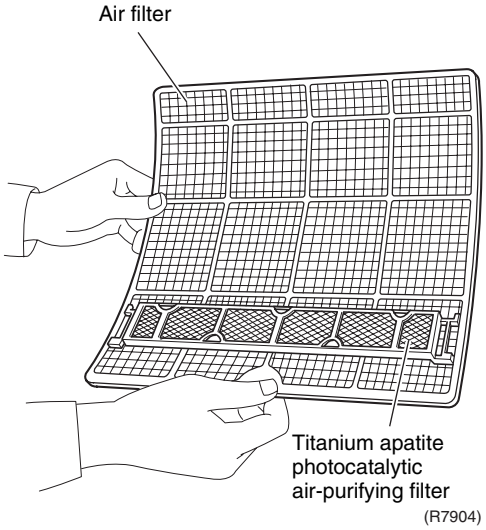 | ■ The titanium apatite photocatalytic air-purifying filter is not marked for difference between the right and left sides. |
| 2 | Remove the titanium apatite photocatalytic air-purifying filter frame by bending the air filter and unfastening the projections from the air filter frame. | 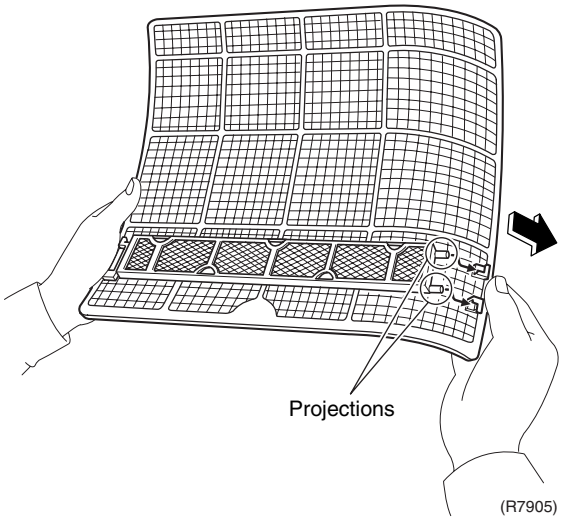 | |
| 3 | Remove the titanium apatite photocatalytic air-purifying filter from its frame (at 5 positions) by bending it. | 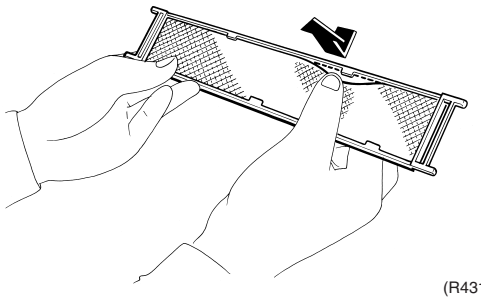 | |

| Step | Procedure | | Points |
|---|---|---|---|
| 4. Removing the air supply filter | | 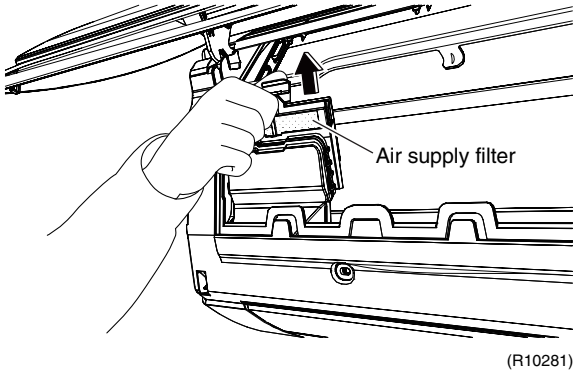 | ■ Insert the air supply filter along with the guide for easy installation.<br>■ Install the air supply filter correctly so that the front side mark comes front.<br>■ Humidifying operation without installing the air supply filter forms condensation inside the panel and it causes water leakage.<br>■ There are 4 hooks for the air supply filter. |
| 1 | Lift the air supply filter up to take out. | | |
| 2 | Undo the upper 2 hooks of the air supply filter and open the frame. | 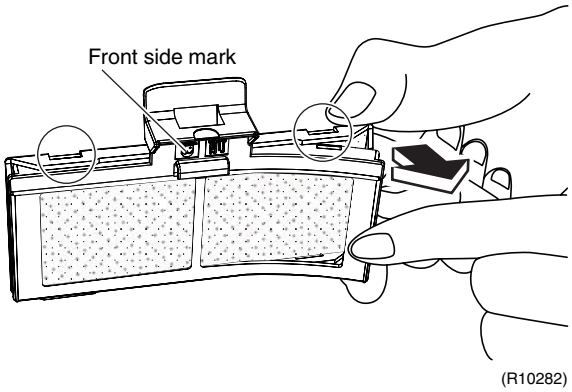 | |

# 1.2 Removal of Front Panel

**Procedure**

**Warning** **Be sure to wait 10 minutes or more after turning off all power supplies before disassembling work.**

| Step | Procedure | | Points |
|---|---|---|---|
| 1. Removing the front panel | | | |
| 1 | Hold the right and left projections of the front panel, and open the panel over the position where it stops. | 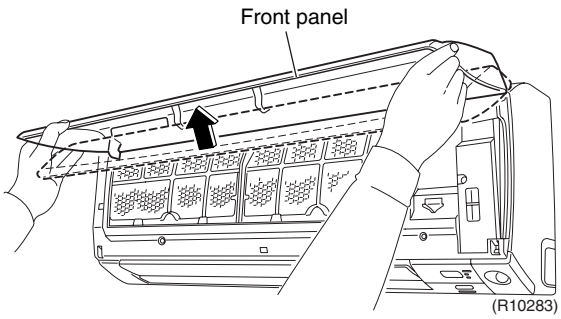 | |
| 2 | Slide the left rotary shaft to the right and release it. | 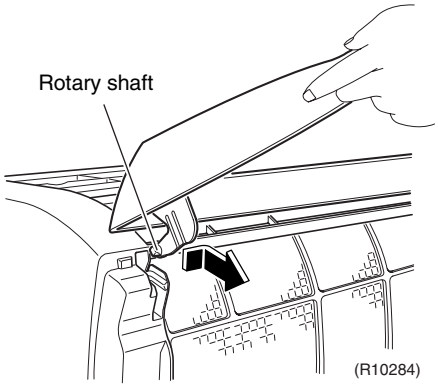 | |
| 3 | Slide the right rotary shaft to the left and release it. | 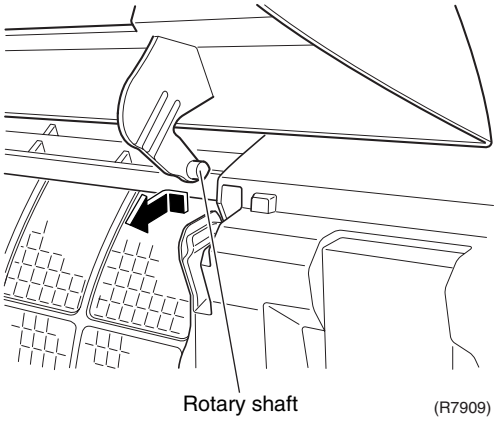 | |
| 4 | Remove the front panel. | 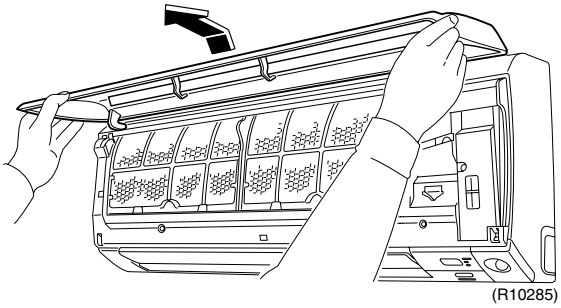 | |

| | | | |
|---|---|---|---|
| 5 | When mounting the front panel, make sure that the projection is fitted in the guide before closing the panel. | 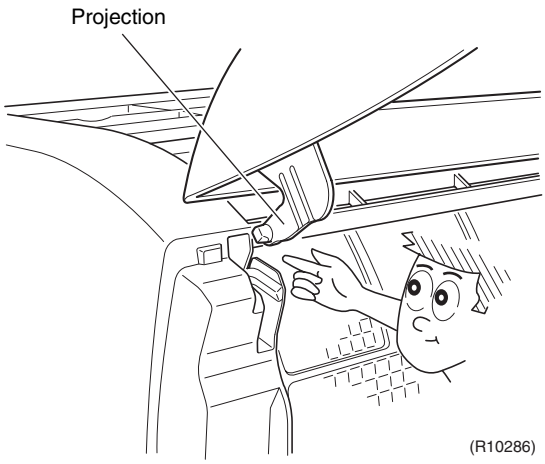 | **Caution on Mounting**<br>■ When mounting the front panel, fit the right and left rotary shafts one by one into the grooves and fully push them in position. |

# 1.3 Removal of Front Grille

**Procedure**

**Warning** **Be sure to wait 10 minutes or more after turning off all power supplies before disassembling work.**

| Step | Procedure | | Points |
|---|---|---|---|
| 1. Removing the service cover | | | |
| 1 | Remove the screw of the service cover. | 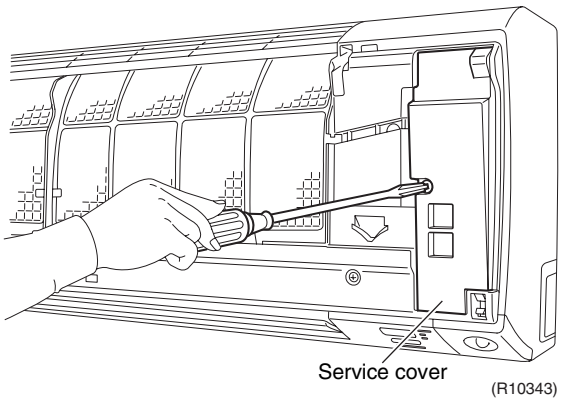 (R10343) | **Preparation**<br>■ Remove the front panel according to the “Removal of Front Panel”. |
| 2 | Pull out the service cover diagonally down in the direction of the arrow. | 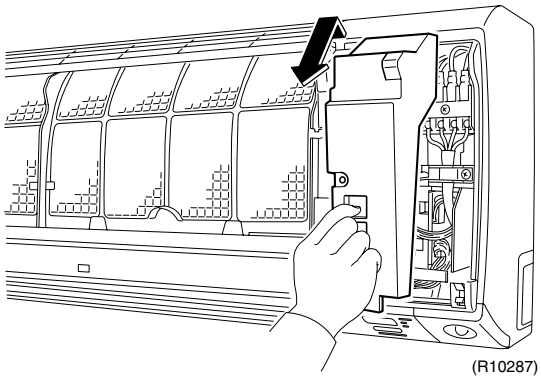 (R10287) | |
| 3 | The figure shows the appearance of the inside. | 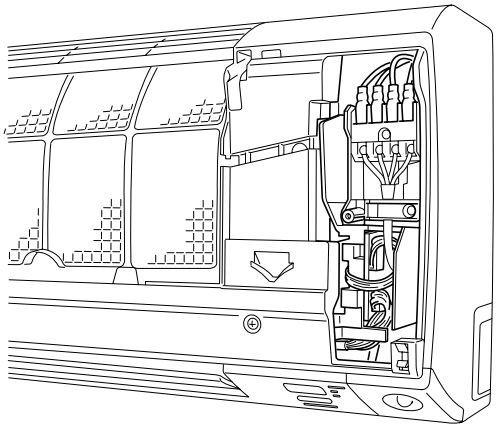 (R10288) | |
| 2. Removing the front grille | | | |
| 1 | Remove the screws (one each at the right and left). | 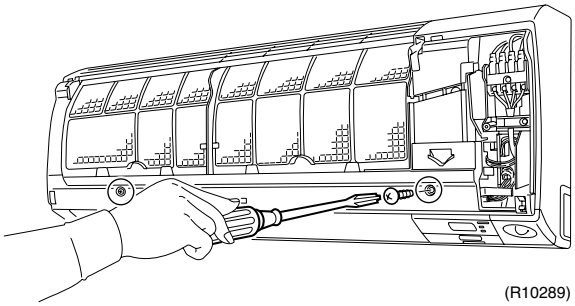 (R10289) | |

| Step | Procedure | | Points |
|---|---|---|---|
| 2 | Release the 3 hooks at the top. | 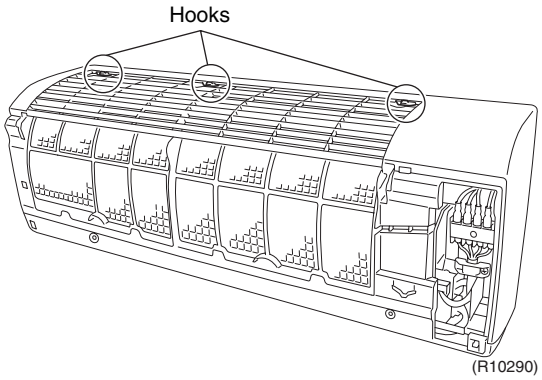 | |
| 3 | Put your fingers into the front grille and lift the grille up to unfasten the left hook. | 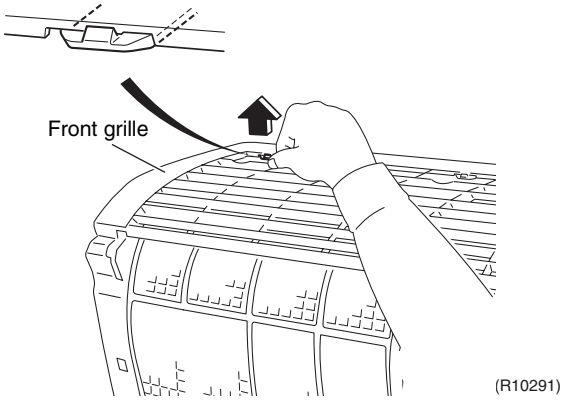 | |
| 4 | Put your fingers into the front grille and lift the grille up to unfasten the center hook. | 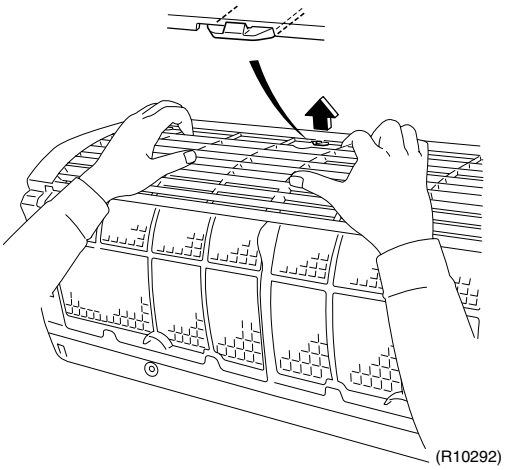 | |

| Step | Procedure | | Points |
|---|---|---|---|
| 5 | Unfasten the right hook also by putting your fingers into the grille and lifting it. | 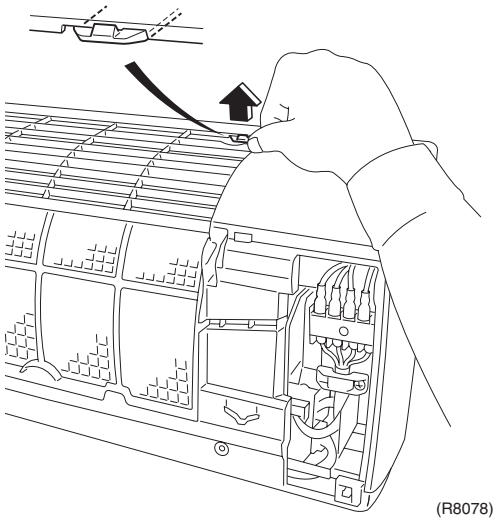 (R8078) | |
| 6 | Remove the front grille by tilting the upper part to the front (a) and lifting and pulling the lower part toward yourself (b). | 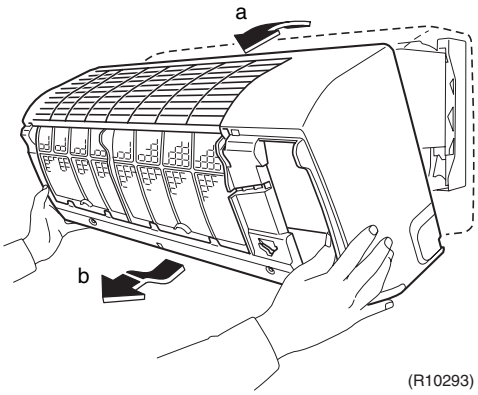  (R10293) | **Caution on Mounting**<br>■ When mounting the front grille, make sure that the 3 hooks are fastened as they were. |

# 1.4 Removal of Horizontal Blades and Vertical Blades

**Procedure** ⚠ **Warning** **Be sure to wait 10 minutes or more after turning off all power supplies before disassembling work.**

| Step | Procedure | | Points |
|---|---|---|---|
| 1. Removing the horizontal blade (large) | | | |
| 1 | Open the horizontal blade (large). | 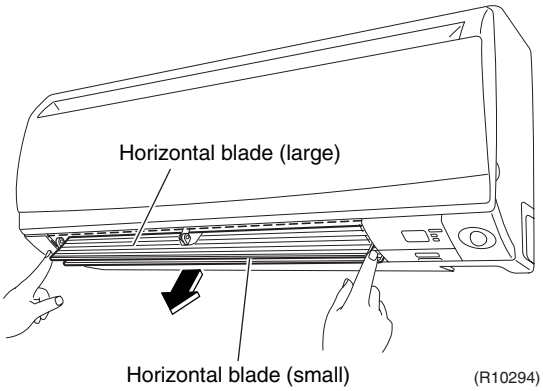 | **Cautions on Mounting**<br>■ Mount the large horizontal blade to the upper side and the small horizontal blade to the lower side.<br>Do not put them in the wrong place. |
| 2 | Unfasten the center fixing shaft while bending the horizontal blade slightly. | 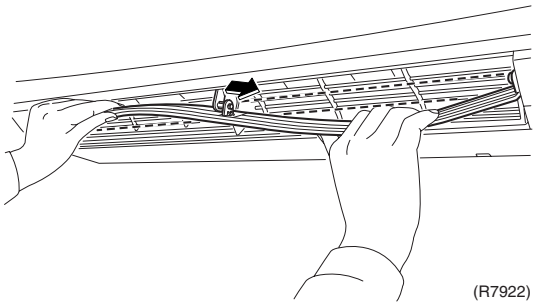 | ■ There is a key alignment mark at the right side. Insert the key first while turning. |
| 3 | Unfasten the left fixing shaft of the horizontal blade (large). | 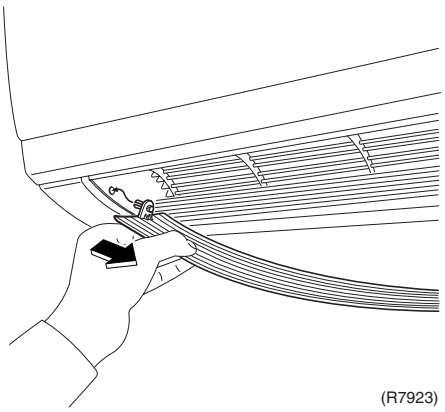 | ■ After key alignment at the right side, mount the flap first to the center fixing shaft and then to the left fixing shaft. |
| 4 | Unfasten the right fixing shaft of the horizontal blade (large). | 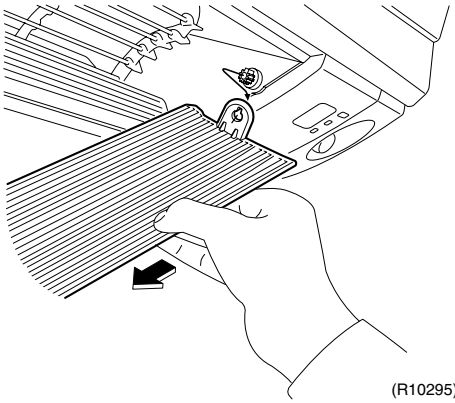 | |

| Step | Procedure | | Points |
|---|---|---|---|
| 2. Removing the horizontal blade (small) | | | |
| 1 | Remove the horizontal blade (small) while bending the fixed part at the center slightly. | 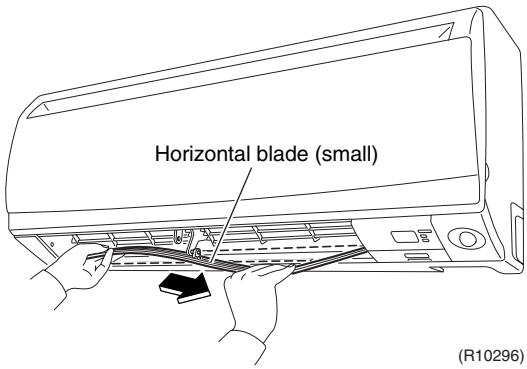 | |
| 2 | Unfasten the left side. | 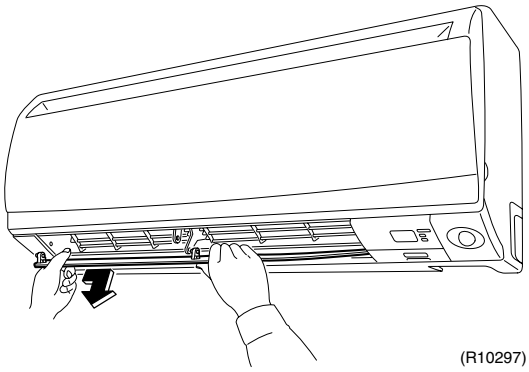 | |
| 3 | Unfasten the key type fixing shaft at the right side. | 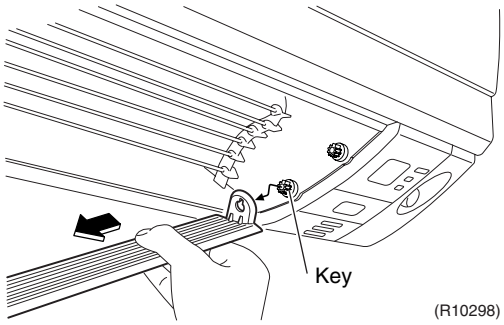 | |
| 3. Removing the fan guard | | | |
| 1 | Unfasten the hooks at the lower part of the fan guard with a flat screwdriver. | 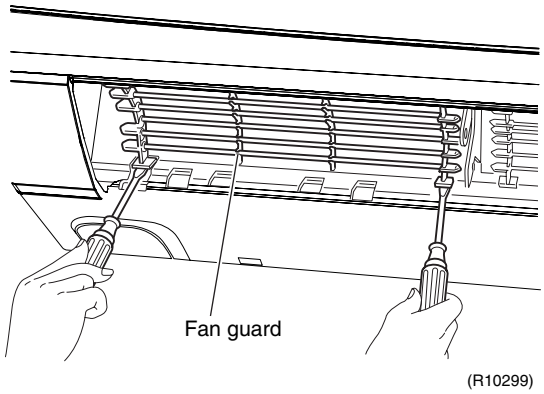 | |

| Step | Procedure | | Points |
|---|---|---|---|
| 2 | Remove the fan guard toward yourself. | 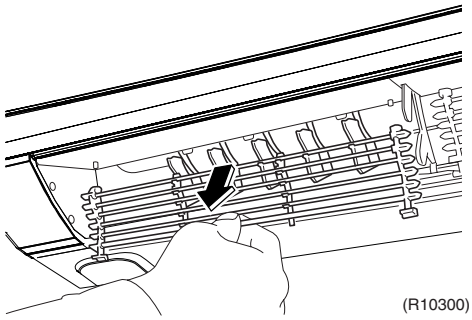 (R10300) | |
| 4. Removing the vertical blade | | | |
| 1 | Detach the pivot from the interlock shaft for vertical blades by a flat screwdriver. | 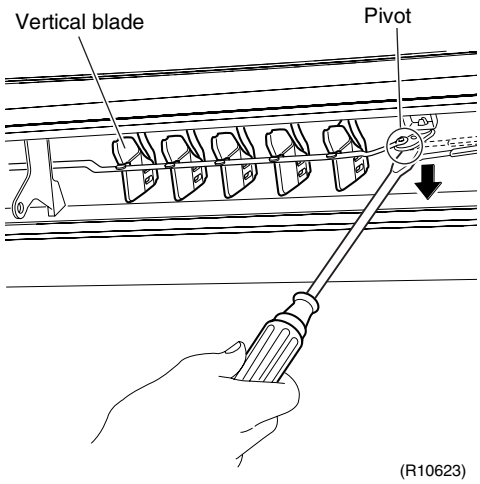  (R10623) | |
| 2 | Remove the interlock rod. | 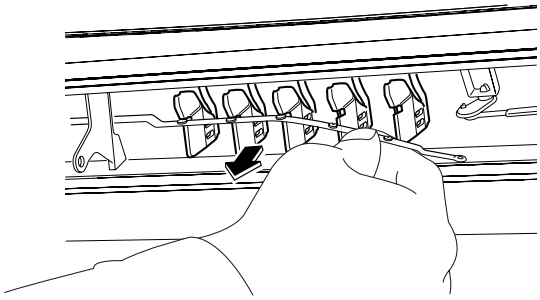 (R10302) | |
| 3 | Unfasten the hooks at the shaft mounting part by pressing them with a flat screwdriver. | 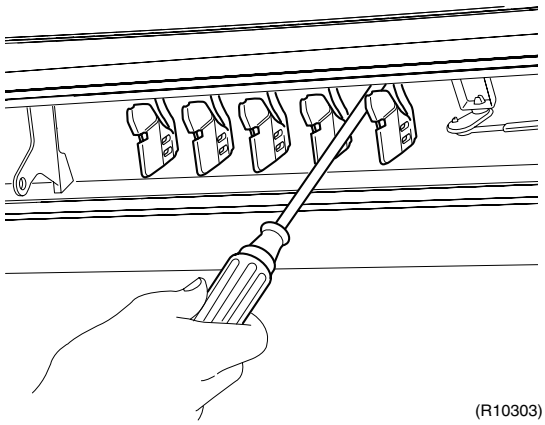 (R10303) | |

| Step | Procedure | | Points |
|---|---|---|---|
| 4<br><br>5 | Unfasten the hooks at the upper 2 positions.<br><br>Remove the vertical blade toward yourself. | 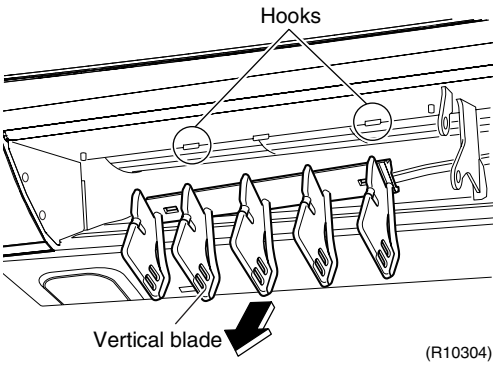 | ■ Five vertical blades are united as a set. (It is impossible to replace only one blade.)<br>■ The set of blades is not marked for difference between right and left. |

# 1.5 Removal of Electrical Box

**Procedure**

**Warning** **Be sure to wait 10 minutes or more after turning off all power supplies before disassembling work.**

| Step | Procedure | | Points |
|---|---|---|---|
| 1 | The figure shows the connections of wire harnesses. | 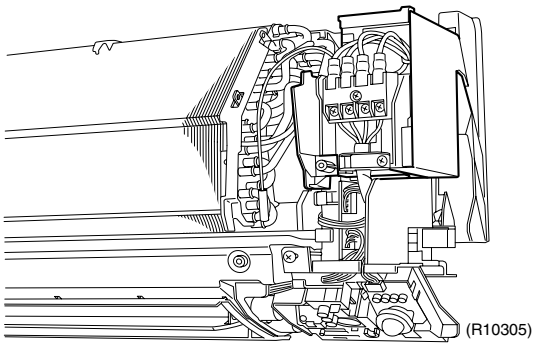 (R10305) | **Preparation**<br>■ Remove the front grille according to the “Removal of Front Grille”. |
| 2 | Remove the screw of the electric wire retaining plate to remove the plate. | 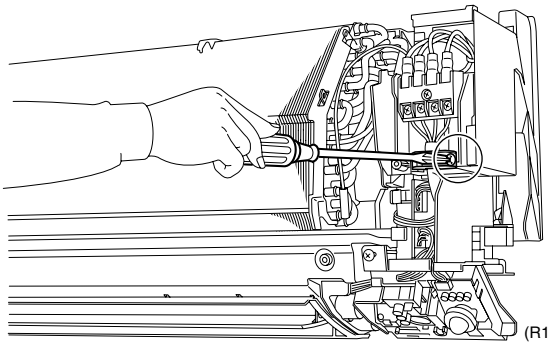 (R10306) | |
| 3 | Remove the screws of the terminal board and disconnect the connecting wires. | 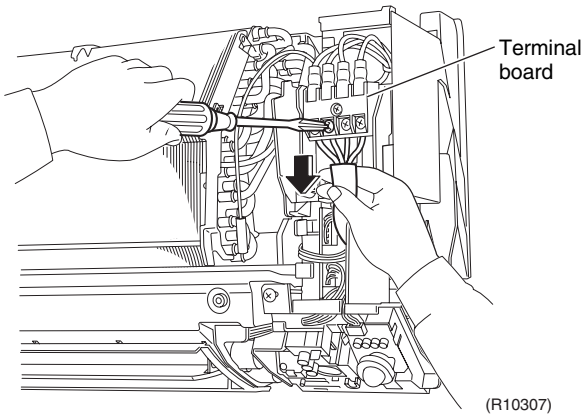  (R10307) | |
| 4 | Disconnect the connector of the fan motor [S1]. | 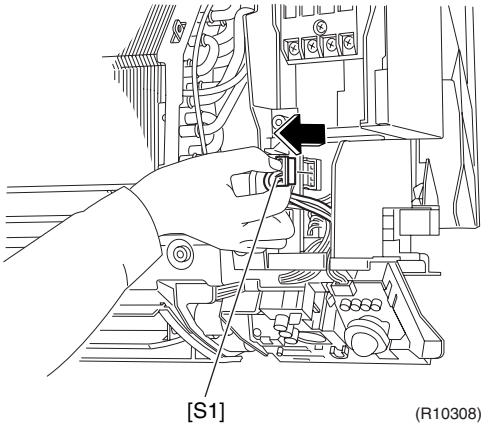  (R10308) | |

| Step | Procedure | | Points |
|---|---|---|---|
| 5 | Disconnect the connector of the swing motor [S41]. | 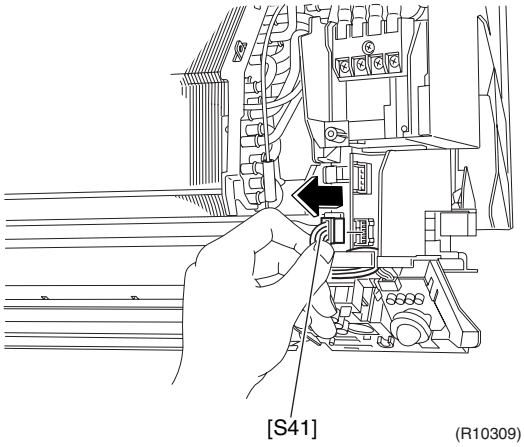 <br> 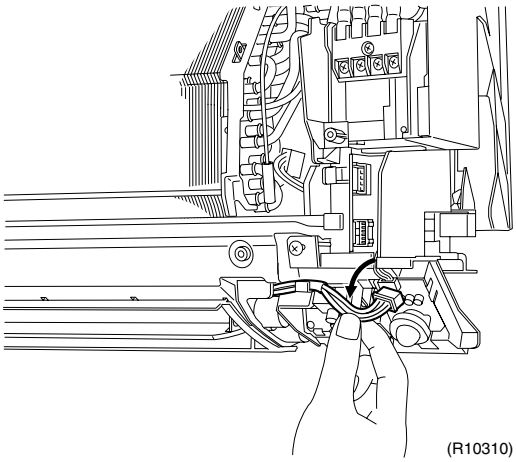 | ■ Put any excess wires behind the power supply lead wire. |
| 6 | Remove the heat exchanger thermistor. | 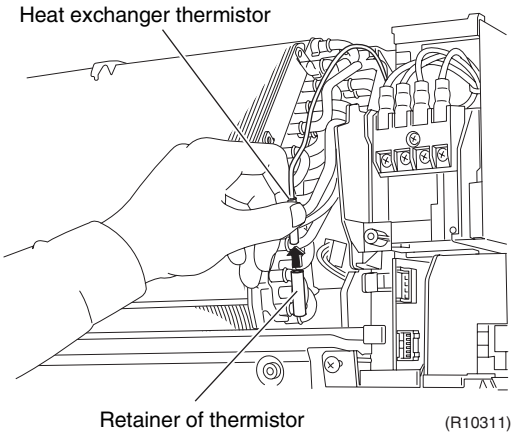 | ■ Use care not to lose the retainer of thermistor.<br> 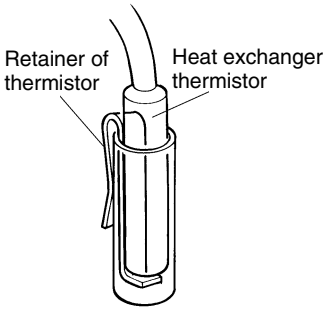 |
| 7 | Disconnect the earth wire by removing the screw. | 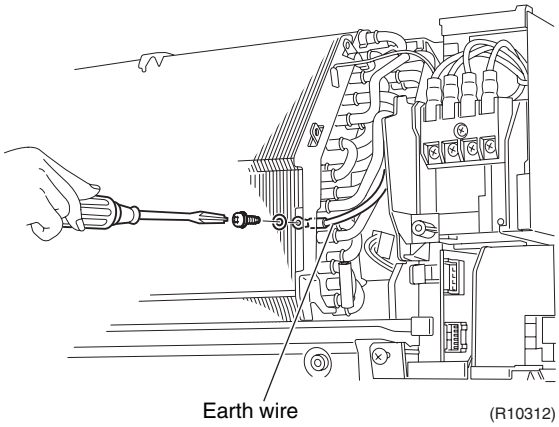 | |

| Step | Procedure | | Points |
|---|---|---|---|
| 8 | Remove the screw of the electrical box. | 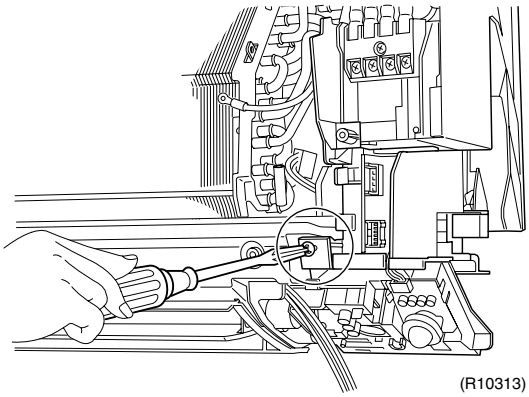 (R10313) | |
| 9 | Lift up the electrical box and pull it toward yourself. | 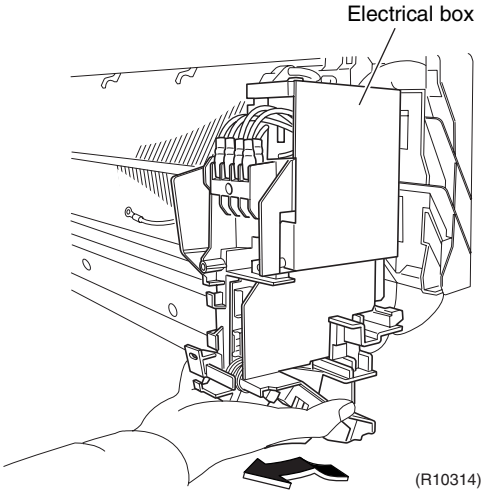  (R10314) | ■ When reassembling, make sure to fasten the upper hook at the back of the electrical box. Then, also fasten the lower hook at the back. |

# 1.6 Removal of PCB

**Procedure**

**Warning** **Be sure to wait 10 minutes or more after turning off all power supplies before disassembling work.**

| Step | Procedure | | Points |
|---|---|---|---|
| 1. Removing the shield plate | | | |
| 1 | The figure shows the appearance of the electrical box. | 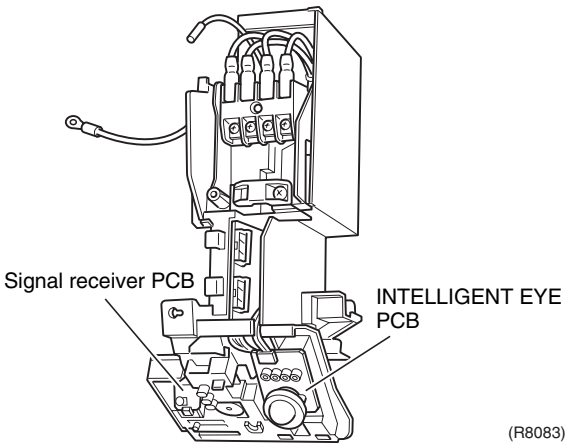 | **Preparation**<br>■ Remove the electrical box according to the “Removal of Electrical Box”. |
| 2 | Open the shield plate (at the top). | 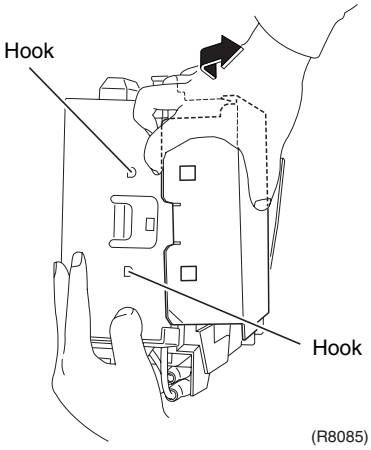 | |
| 3 | Unfasten the hook at the back of the shield plate. | 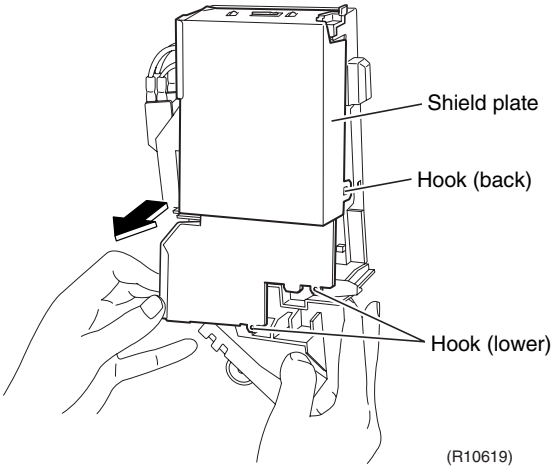 | |
| 4 | Lift up the shield plate to unfasten the hooks (lower) and remove it. | | |

| Step | | Procedure | Points |
|---|---|---|---|
| 2. Removing the terminal board | | 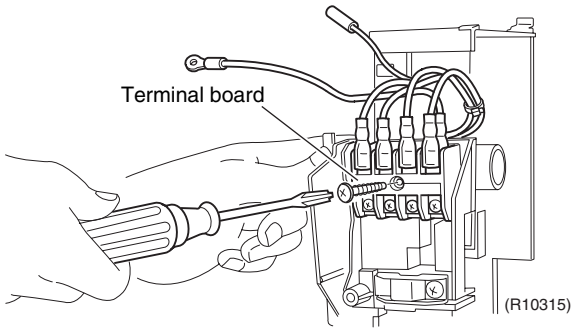 | |
| 1 | Dismount the terminal board by removing the screw. | | |
| 3. Removing the signal receiver unit | | 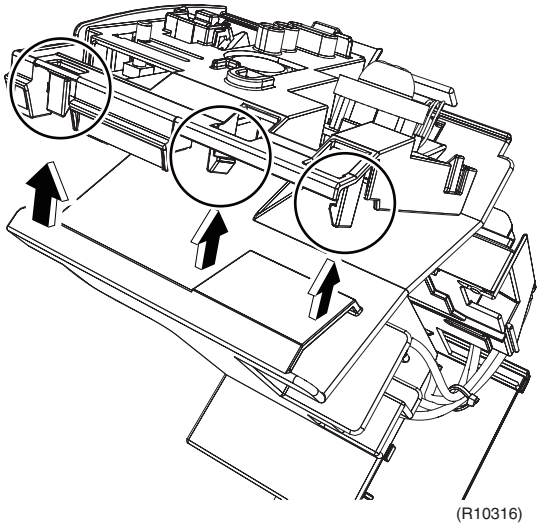 | |
| 1 | Release the 3 hooks. | | |
| 2 | Release the hook on the opposite side, and lift up the signal receiver unit. | 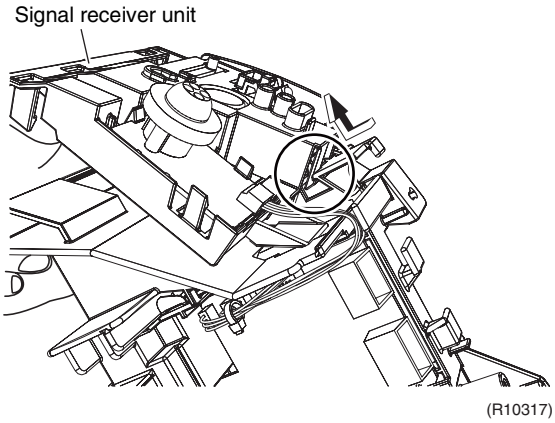 | |

| Step | Procedure | Points |
|---|---|---|
| 4. Removing the INTELLIGENT EYE PCB | | |
| 1 | Remove the INTELLIGENT EYE PCB by opening the 3 hooks. | |
| 2 | Disconnect the connector [S26] from the INTELLIGENT EYE PCB. | |
| 5. Removing the signal receiver PCB | | |
| 1 | Remove the signal receiver PCB by opening the hooks at 3 positions. | |
| 2 | Disconnect the connector [S48] from the signal receiver PCB. | |

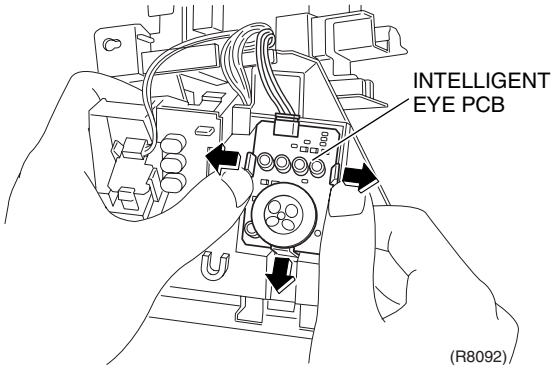


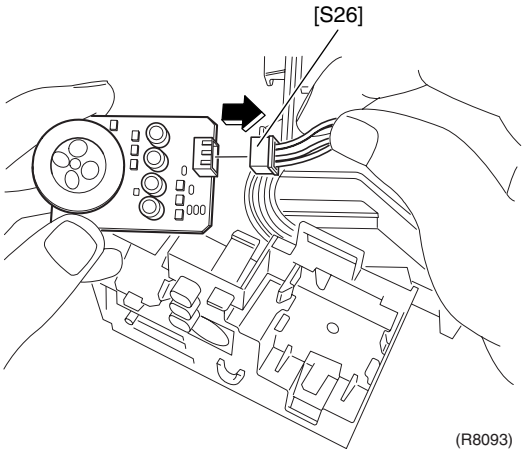


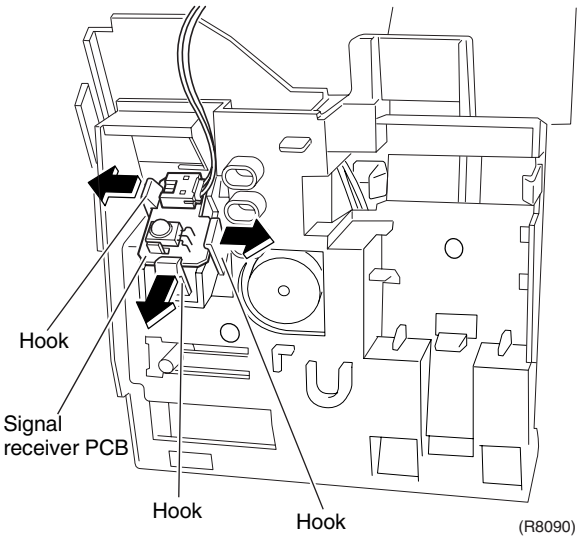


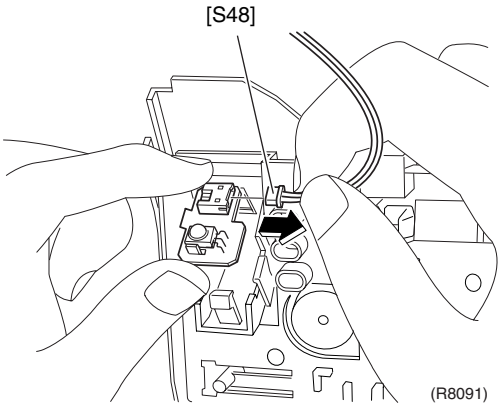

| Step | | Procedure | Points |
|---|---|---|---|
| 6. Removing the display PCB | | | ■ The display PCB is positioned on the rear side of the signal receiver. |
| 1 | The figure shows the connection of wire harness for the display PCB. | 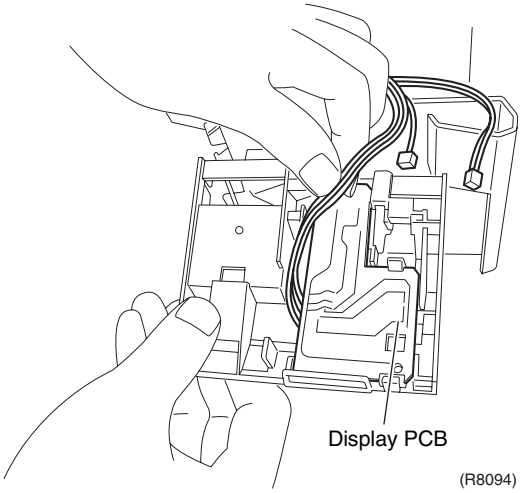 | |
| 2 | Remove the display PCB by unfastening the 4 hooks. | 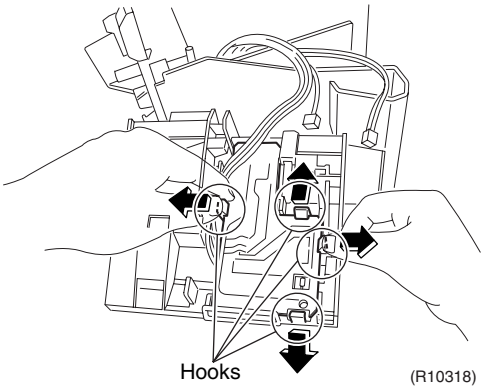 | |
| 3 | Disconnect the connector [S49] from the display PCB. | 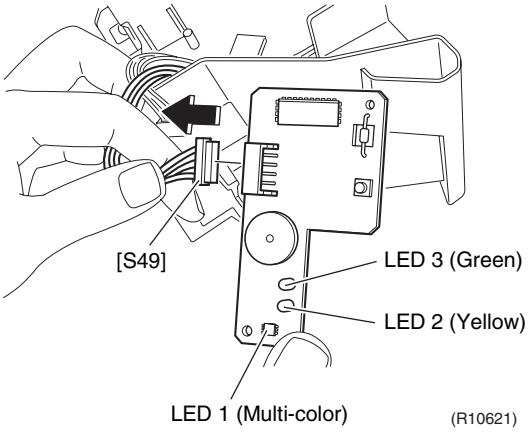 | |
| 7. Removing the control PCB | | | |
| 1 | Unfasten the 2 lower hooks of the control PCB. | 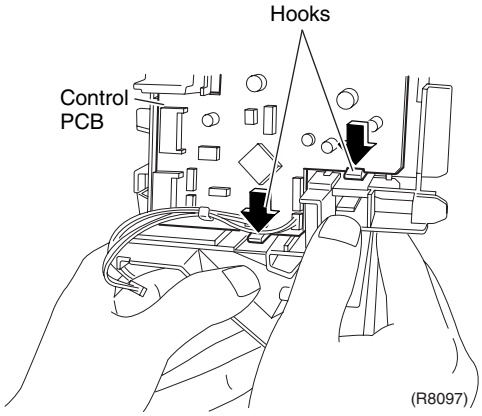 | |

| Step | Procedure | | Points |
|---|---|---|---|
| 2 | Lift up the bottom of the control PCB and pull it out. | 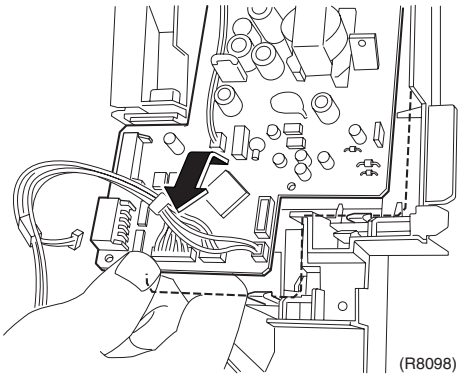 (R8098) | ■ When mounting the control PCB, make sure that it is fixed by 2 upper hooks. |
| 3 | The figures show the names of the PCB component parts. | 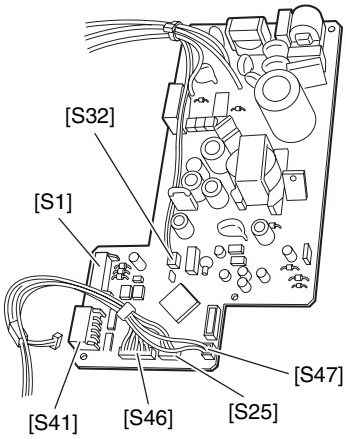  (R8099) 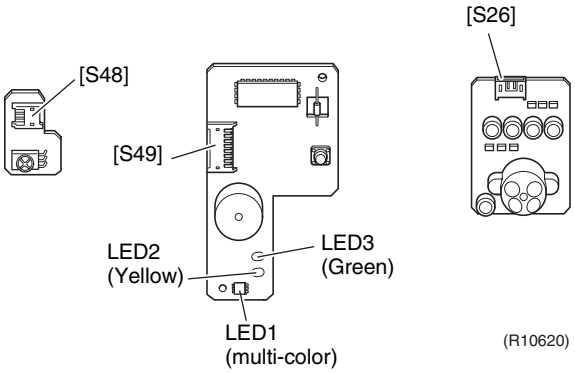  (R10620) | ■ Lead-free solder (PbF) is used for the PCB. When replacing the PCB, use the specific solder and soldering iron.<br><br>[S1] To DC fan motor<br>[S25] To INTELLIGENT EYE PCB<br>[S26] To control PCB<br>[S32] To heat exchanger thermistor<br>[S41] To swing motor<br>[S46] To display PCB<br>[S47] To signal receiver<br>[S48] To control PCB<br>[S49] To control PCB<br><br>■ See page 10 for detail |

# 1.7 Removal of the Connecting Duct

**Procedure**

**Warning** **Be sure to wait 10 minutes or more after turning off all power supplies before disassembling work.**

| Step | Procedure | | Points |
|---|---|---|---|
| 1. Remove the connecting duct for humidifying hose | | | **Preparation**<br>■ Remove the front grille according to "Removal of the Front Grille". |
| 1 | Detach the humidifying hose from the duct unit. | 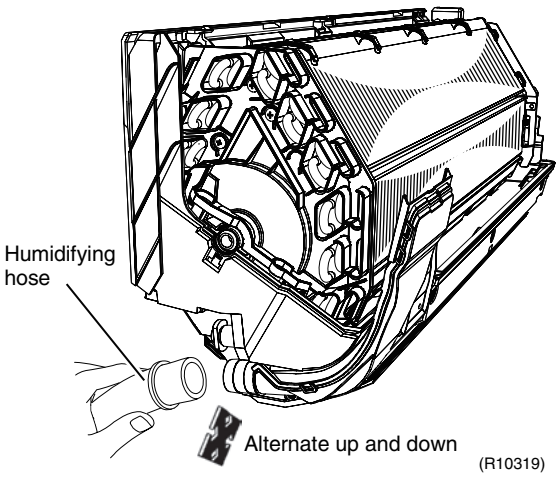 | ■ Since inside of the connecting duct has projection hooks, shake the hose up and down to remove.<br>■ Rotate in the same direction as when assembling for easy removal. |
| 2 | Remove the fixing screw for the duct unit. | 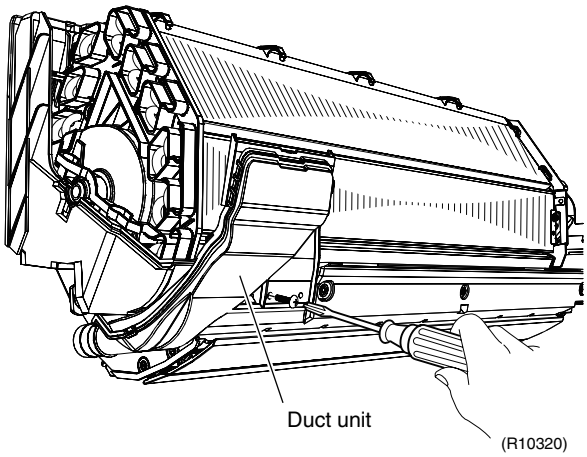 | |
| 3 | Lift the right side to undo the projection and slide to the left. | 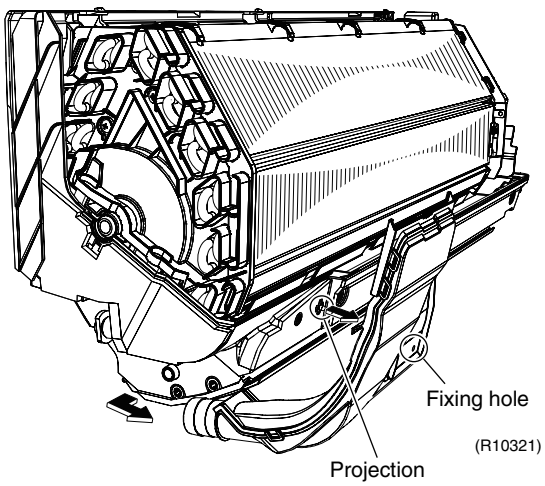 | ■ When assembling, make sure to insert the projection into the fixing hole on the duct unit. |

# 1.8 Removal of Heat Exchanger

**Procedure**

**Warning** **Be sure to turn off all power supplies at least 10 minutes before disassembling work.**

| Step | Procedure | | Points |
|---|---|---|---|
| 1. Disconnecting the refrigerant pipe | | | ■ When reassembling, make sure the drain hose is sloped downward. 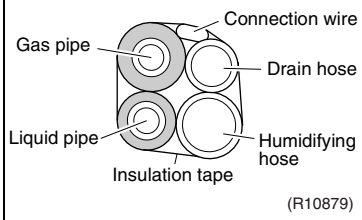  |
| 1 | Remove the screws which fix the heat exchanger to the installation plate. | 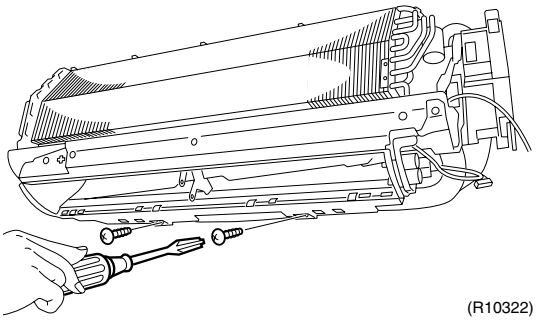  | |
| 2 | Release the 2 hooks at the bottom.<br>Lift the indoor unit by a wooden base. | 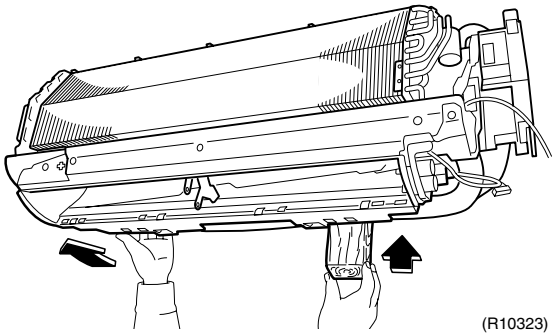  | **Caution**<br>**In pump-down work, be sure to stop the compressor before disconnecting the refrigerant pipe. If the refrigerant pipe is disconnected with the compressor being operated and the stop valve being open, air may be sucked in to generate an over-pressure in refrigeration cycle, thus resulting in pipe rupture or accidental injury.** |
| 3 | Lift up the indoor unit body slightly and pull out the drain hose. (In the case of left piping) | 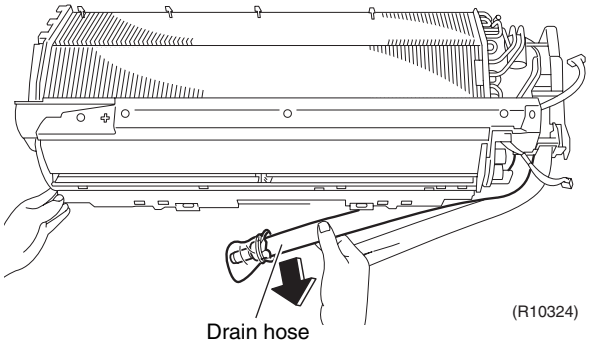  | ■ Place a plastic bag under the drain pan to prevent from wetting the floor with remaining drain.<br>■ If the drain hose is embedded in the wall, disconnect the drain hose beforehand. |
| 4 | Disconnect the pipe connection with 2 pair of spanners.<br><br>**Caution**<br>**From the point of view of environmental protection, be sure to use a vacuum pump for air purging.** | 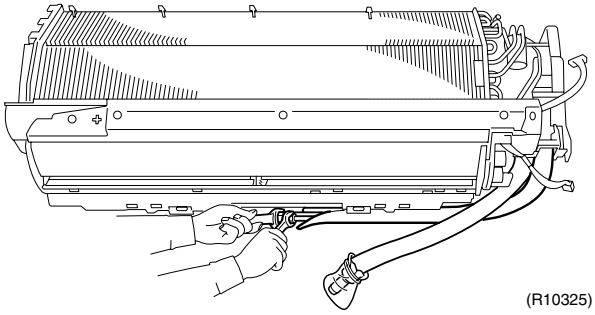  | ■ Carry out the removal works with 2 pair of spanners.<br>■ When the pipes are disconnected, protect the both openings of pipe side and unit side from entering of moisture. |

| Step | Procedure | | Points |
|---|---|---|---|
| 2. | Removing the heat exchanger | | **Preparation**<br>■ Remove the indoor unit from the installation plate. |
| 1 | Unfasten the hook of the pipe fixing plate at the back of the unit and pull out the pipe. | 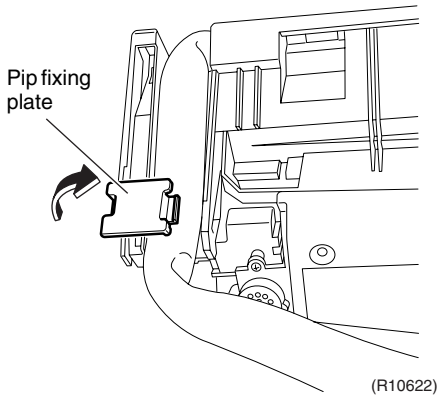 | |
| 2 | Widen the auxiliary pipe by about 10-20 degrees. | 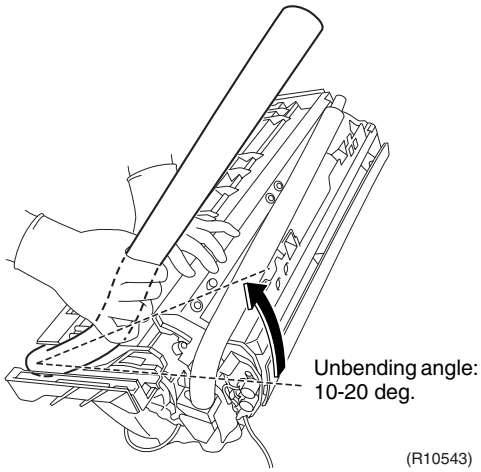 | **Caution**<br>**When dismounting or mounting the heat exchanger, be sure to wear gloves or wrap it with cloth before proceeding to the work. (You may be injured by the fins.)** |
| 3 | Remove the 2 screws on the left side of the unit. | 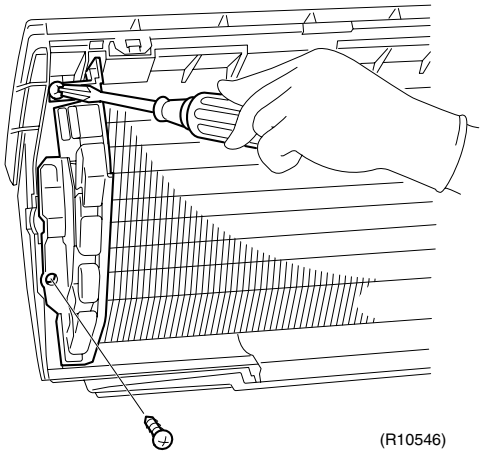 | |
| 4 | Unfasten the lower hook on the right side of the unit with a flat screwdriver. | 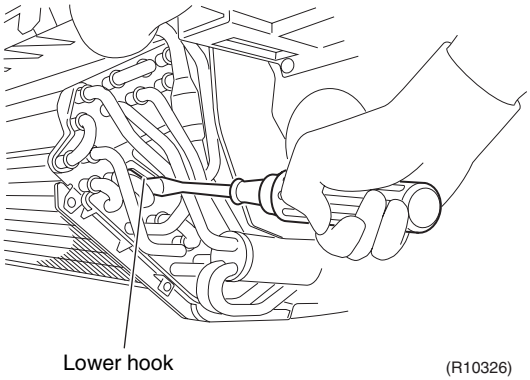 | |

| Step | Procedure | | Points |
|---|---|---|---|
| 5 | After unfastening the lower hooks, hold up the heat exchanger by its right side and lift it up. | 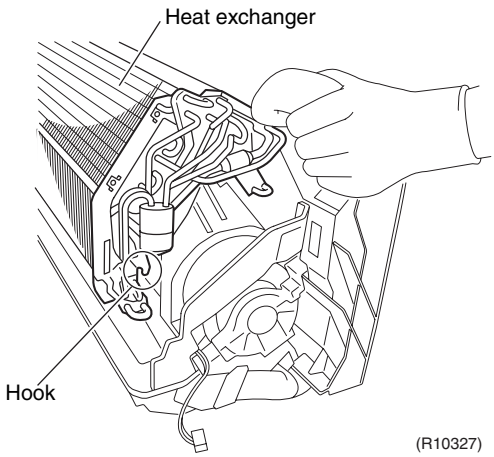 | ■ When mounting the heat exchanger, make sure that the hook (right) is fastened. |
| 6 | Remove the heat exchanger. | 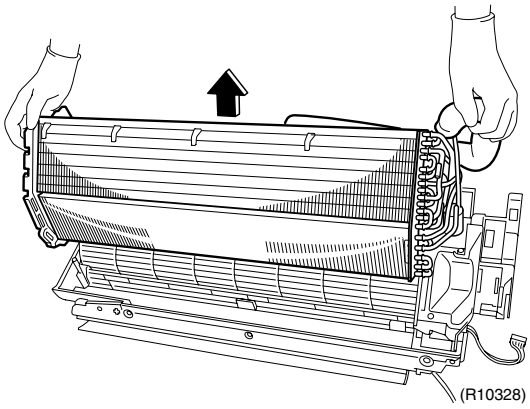 | |

# 1.9 Removal of Swing Motor

**Procedure**

**Warning** **Be sure to turn off all power supplies at least 10 minutes before disassembling work.**

| Step | Procedure | | Points |
|---|---|---|---|
| 1. Removing the swing motor for vertical blade | | | |
| 1 | Release the 2 hooks at the bottom.<br>Lift the indoor unit by a wooden base. | 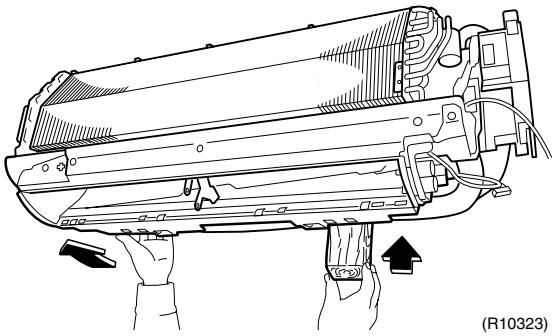 (R10323) | |
| 2 | Remove the screw behind the drain hose, and disconnect the drain hose. | 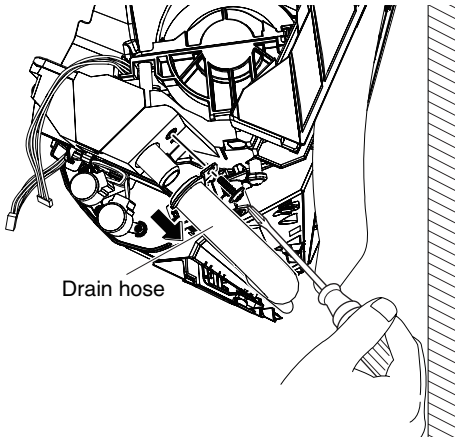  (R10329) | |
| 3 | Remove the screw at the rear, and the screws on the left and right side of swing motors. | 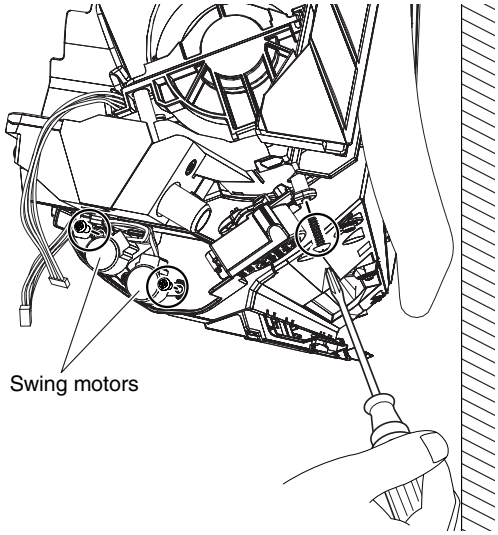  (R10330) | |

| Step | Procedure | | Points |
|---|---|---|---|
| 4 | Detach the pivot from the interlock shaft for vertical blades by a flat screwdriver. | 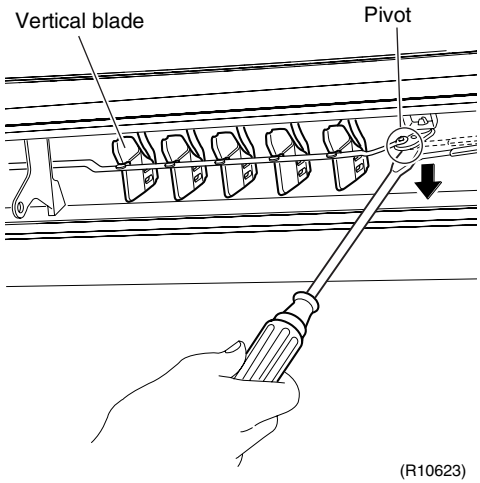 | |
| 5 | Remove the swing motor unit. | 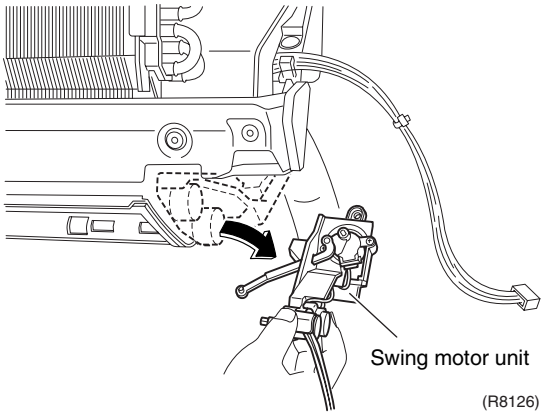 | |
| 6 | Detach the interlock shaft from the swing motor by a flat screw-driver. | 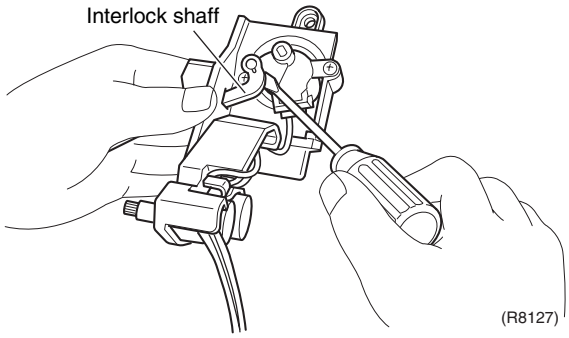 | |
| 7 | Remove the vertical blade interlock by a flat screwdriver. | 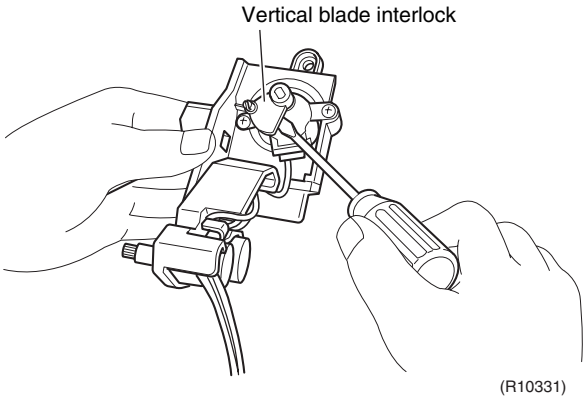 | |

| Step | Procedure | | Points |
|---|---|---|---|
| 8 | Remove the 2 screws. | 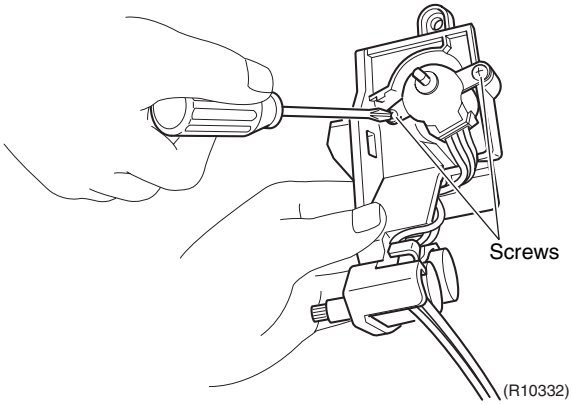 | |
| 9 | Remove the swing motor for vertical blade. | 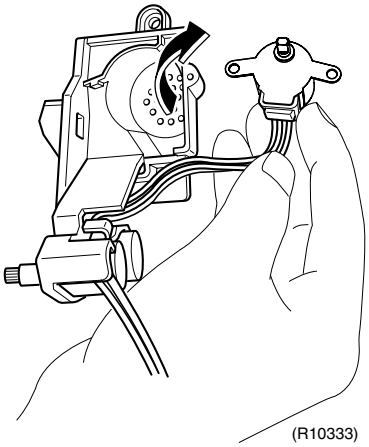 | |
| 10 | Disconnect the connector. | 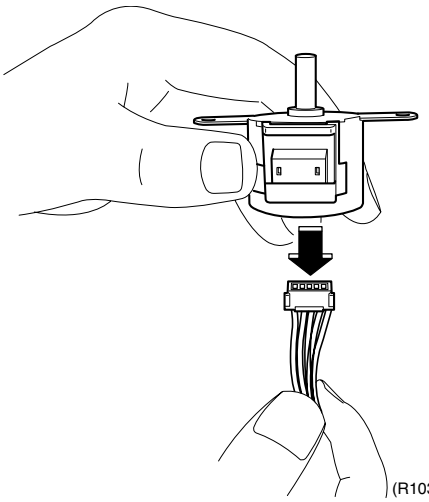 | ■ Connector : green |

| Step | Procedure | | Points |
|---|---|---|---|
| 2. Removing the swing motor for horizontal blade | | | ⚠ **Caution**<br>**When reassembling, do not confuse the installing order of the 2 motors and the colors of the connectors.**<br>**If you set the connectors or motors opposite, the horizontal blades do not move smoothly or the noise may be heard.**<br>① Set the motor for the upper blade first.<br>(connector: white)<br>② Then, set the motor for the lower blade.<br>(connector: red)<br>③ Fix the both motors with a screw. |
| 1 | Remove the screw to remove the swing motors for horizontal blades. | 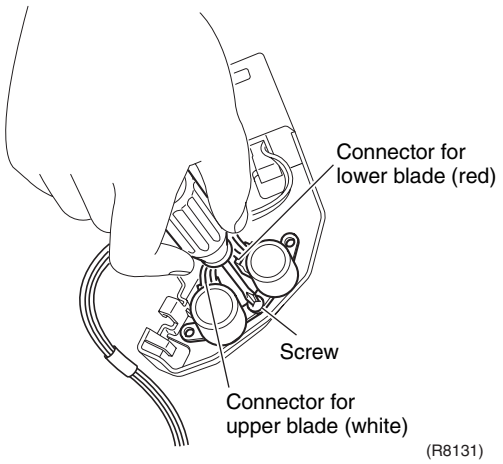 <br> 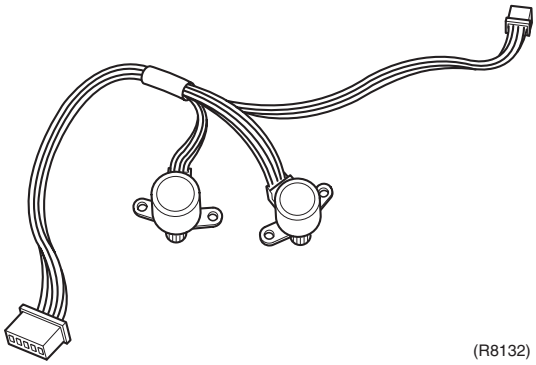 | |
| 2 | Disconnect the harnesses from the motors. | 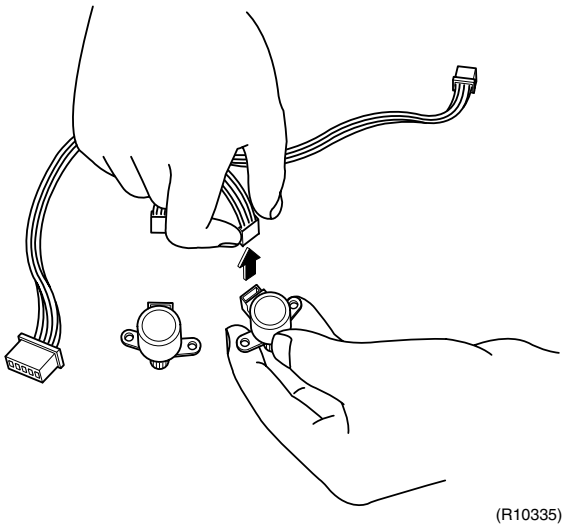 | |

# 1.10 Removal of Fan Rotor

**Procedure**

**Warning** **Be sure to turn off all power supplies at least 10 minutes before disassembling work.**

| Step | Procedure | | Points |
|---|---|---|---|
| 1. Removing the drip proof plate | | 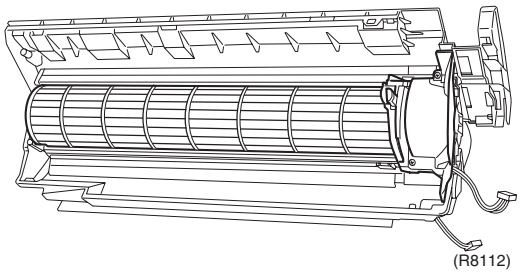 (R8112) | **Preparation**<br>■ Remove the heat exchanger according to the “Removal of Heat Exchanger”. |
| 1 | Dismount the drip proof plate (right) by removing the 2 screws. | 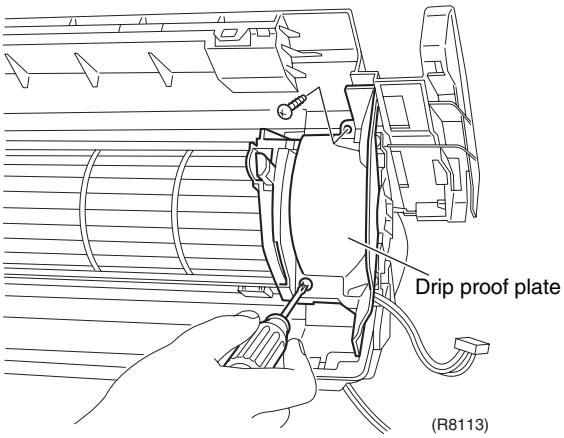  (R8113) | |
| 2 | Release the fan motor wire harness. | 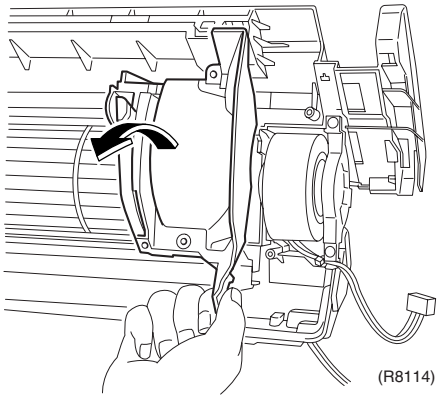 (R8114)<br> 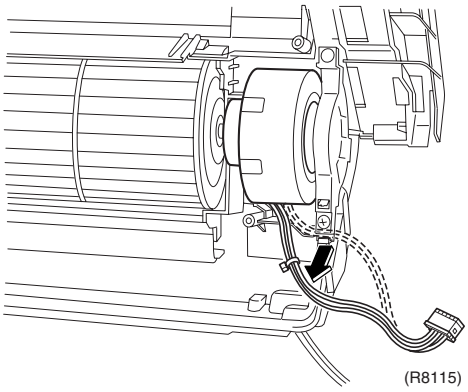 (R8115) | |

| Step | Procedure | | Points |
|---|---|---|---|
| 3 | Remove the 2 screws of the fan motor fixing plate. | 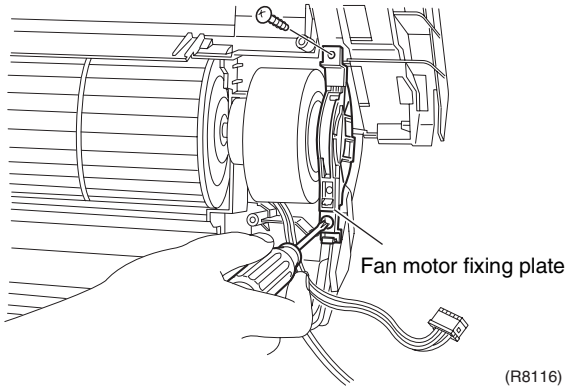 | |
| 4 | Unfasten the hook of the fan motor fixing plate and remove. | 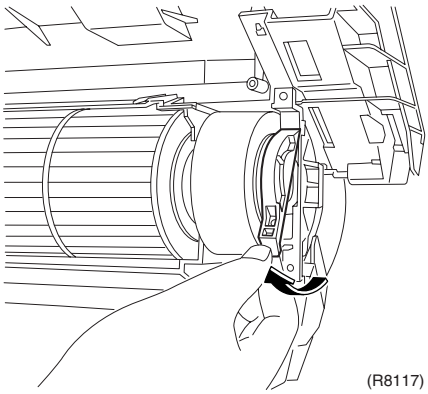 <br> 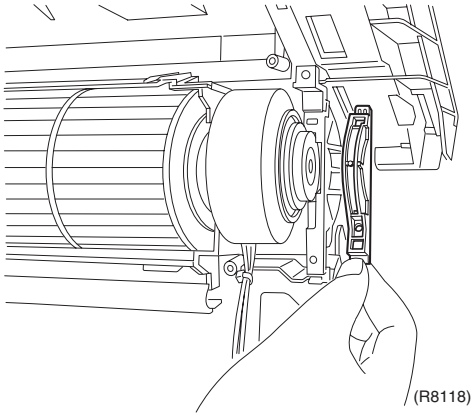 | |
| 2. Removing the fan rotor | | | |
| 1 | Dislocate the fan rotor by sliding it to the right. | 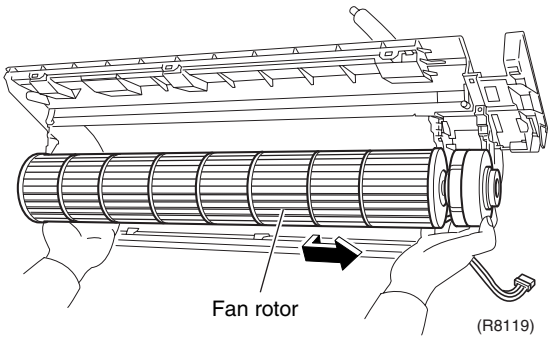 | |

| Step | Procedure | | Points |
|---|---|---|---|
| 2 | Remove the fan rotor by loosening the lock screw. | 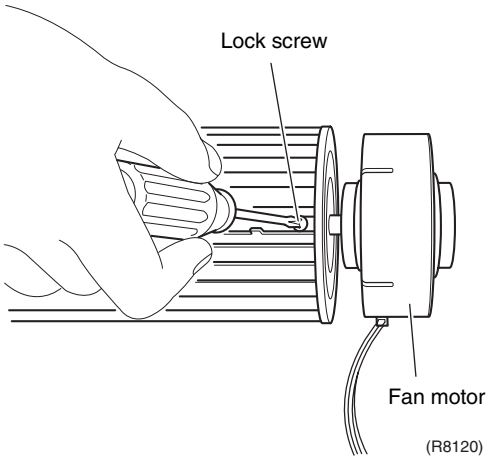 | ■ Reassembling the fan motor<br>When reassembling the fan rotor, provide as much as 5mm of play between the side face of the rotor and the bottom frame.<br> 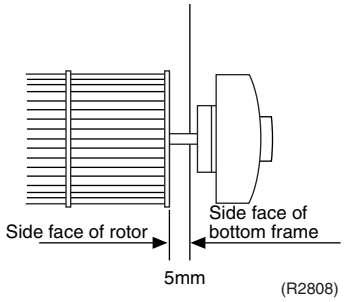 |
| 3 | Press the rubber-made bearing with force from outside. | 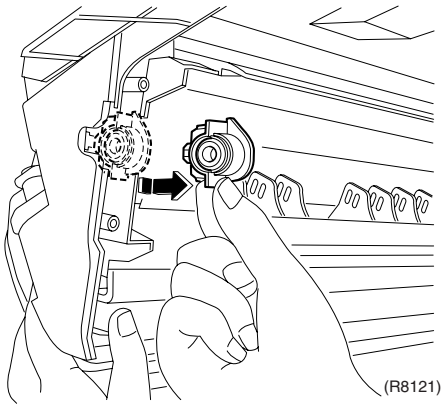 | 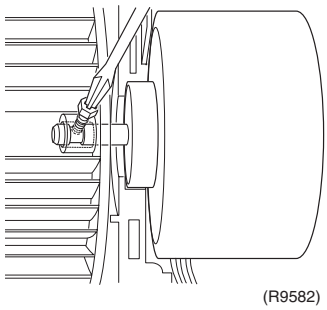 <br>① Insert the fan motor approx. 5mm<br>② Tighten the screw until it stops. Then turn the screw in one scroll.<br>③ Move the fan rotor and confirm the fan motor and the fan rotor are installed appropriately.<br>④ Tighten the screw completely if appropriate.<br>⑤ If not appropriate, go back to ①. |
| 4 | Remove the bearing. | 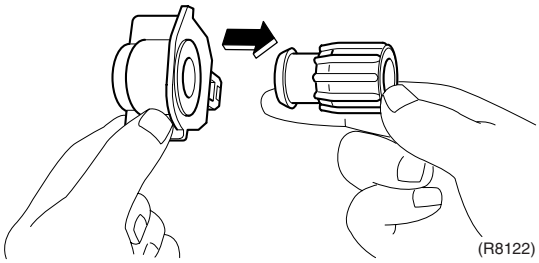 | |

# 2. Outdoor Unit

## 2.1 Removal of Humidifier Unit

**Procedure**

**Warning** **Be sure to wait 10 minutes or more after turning off all power supplies before disassembling work.**

| Step | | Procedure | Points |
|---|---|---|---|
| 1. External appearance | | 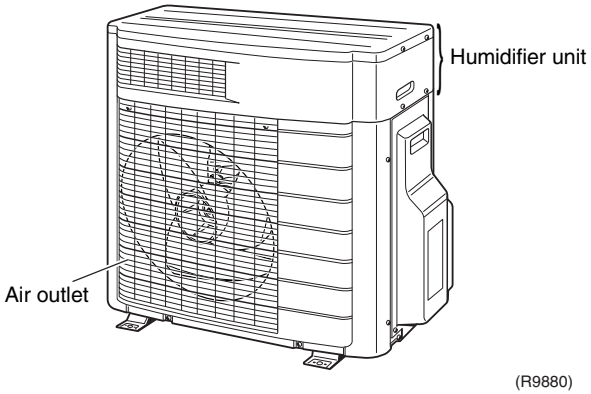 <br> 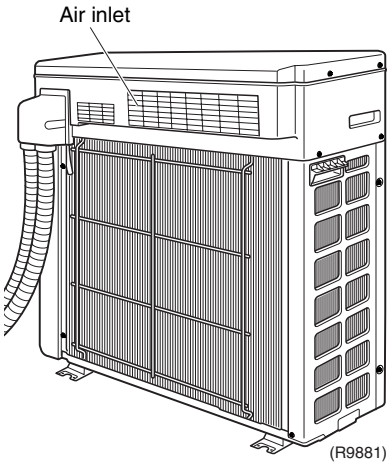 | |
| 2. Removal of the humidifier unit | | 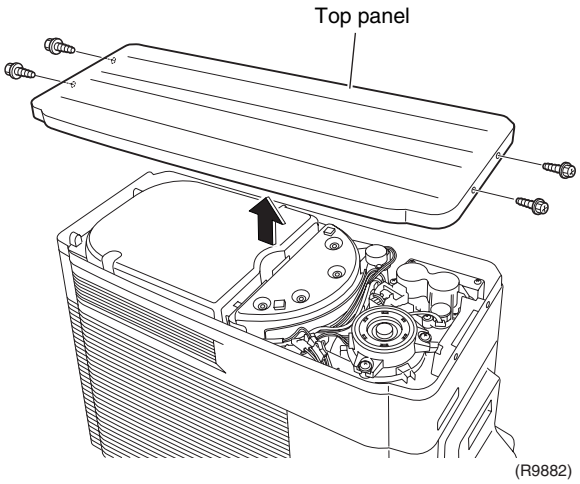 | |
| 1 | Remove the 4 screws and lift up the top panel to remove. | | |

| Step | Procedure | | Points |
|---|---|---|---|
| 2 | Remove the screw, and the hose cover. | 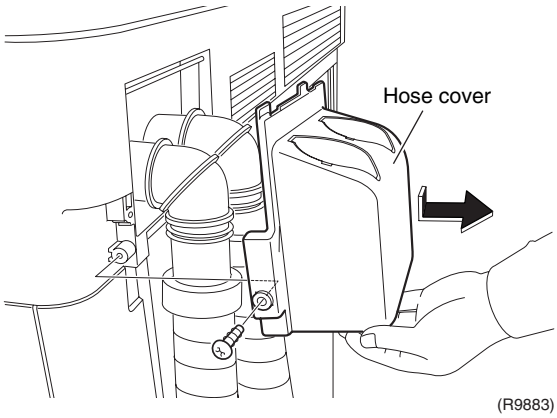 | |
| 3 | Take out the humidifying hoses. | 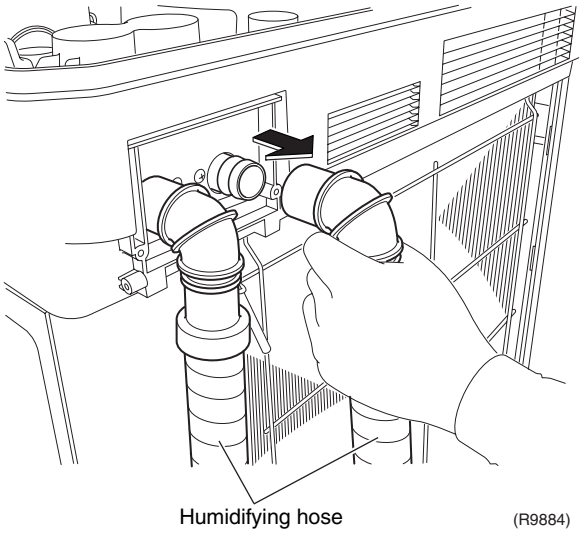 | |
| 4 | The figure shows the arrangement of the relay harness. | 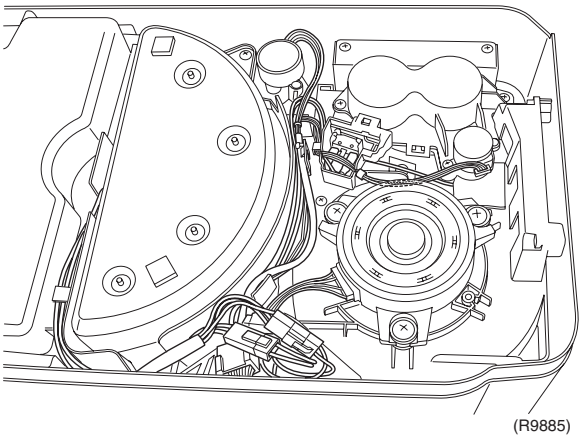 | ■ Be sure to wait 10 minutes or more after turning off the power supply before disconnecting the connectors. |

| Step | Procedure | | Points |
|---|---|---|---|
| 5 | Disconnect the 4 relay connectors. | 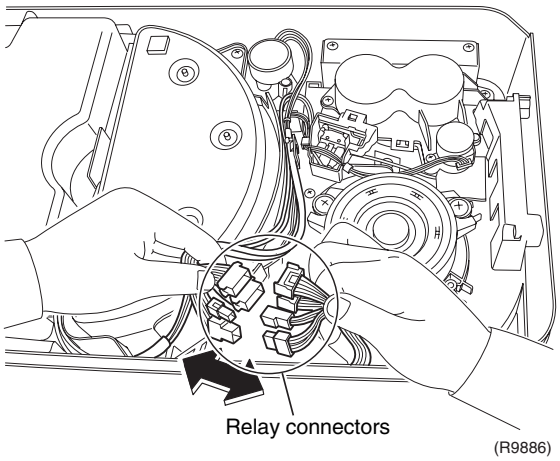 | ■ Do not pull the harnesses from the outdoor unit strongly so as not to loose the hook of the mounting plate.<br>(See the illustration below on this page for the mounting plate.) |
| 6 | Disconnect the connector for humidifier fan motor. | 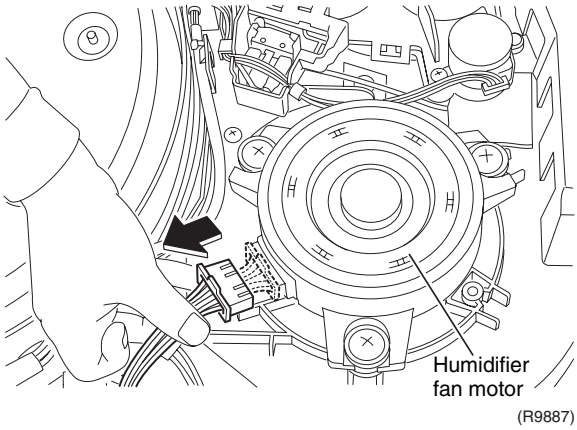 | ■ Be sure to wait 10 minutes or more after turning off the power supply before disconnecting the connectors.<br>■ Pull out the connector while pushing up the hook on the bottom side.<br> 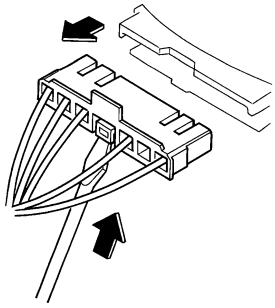 <br><From the back side><br> 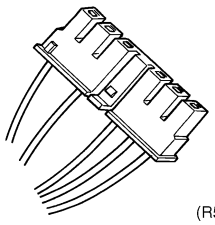 <br>(R5796) |
| 7 | Remove the 4 screws of the humidifier unit and lift it up to remove. | 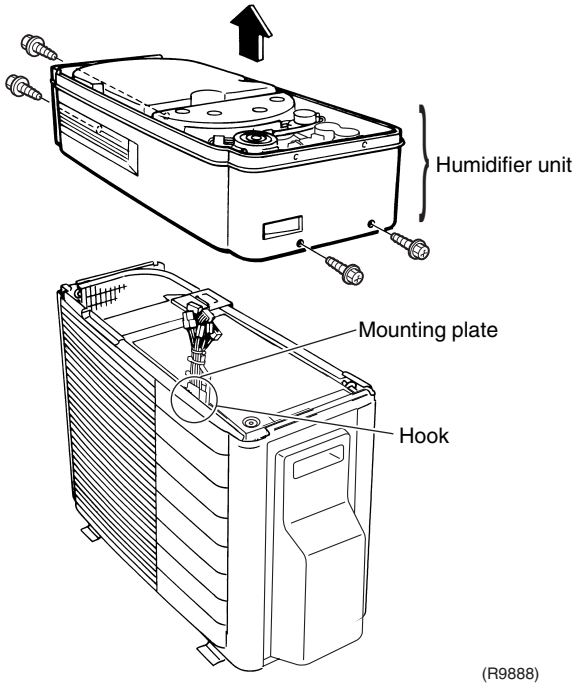 | ■ When lifting up the humidifier unit, be careful not to pull the relay harnesses forcibly.<br>■ When reassembling the humidifier unit, make sure the mounting plate is hooked (refer to page 232 ) and do not forget to connect the relay connectors. |

# 2.2 Removal of Heater ASSY / Humidifying Rotor (Moisture Adsorption Element) / Humidifying Rotor Motor

**Procedure**

**Warning** **Be sure to wait 10 minutes or more after turning off all power supplies before disassembling work.**

| Step | Procedure | | Points |
|---|---|---|---|
| | Internal structure of the humidifier unit | 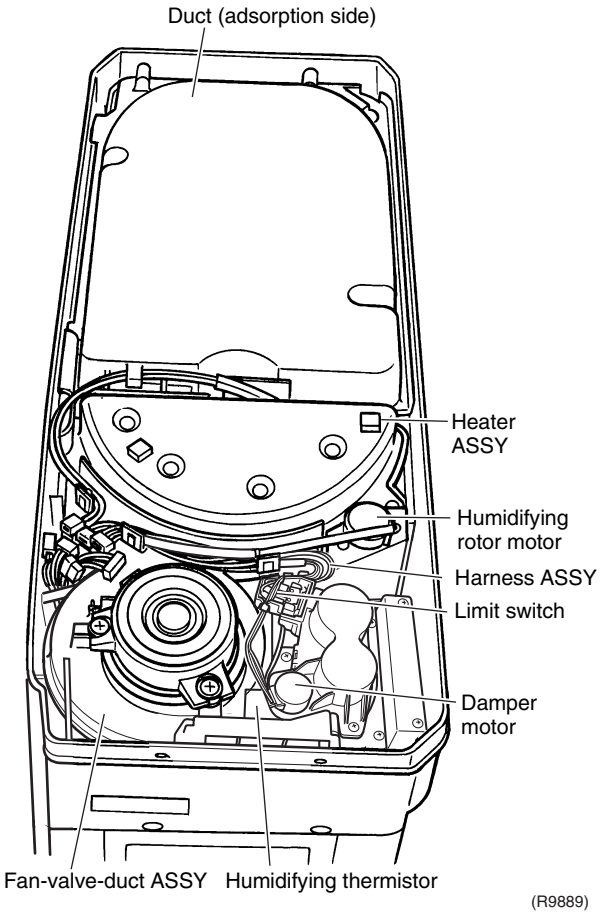 | **Preparation**<br>■ Remove the top panel according to "Removal of Humidifier Unit".<br>■ The humidifying rotor is located under the heater ASSY and the duct. |
| 1. Removal of the heater ASSY | | | |
| 1 | Remove the 4 screws of the duct on adsorption side. | 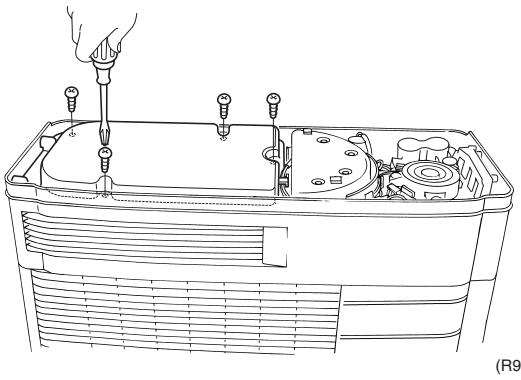 | |

| Step | Procedure | | Points |
|---|---|---|---|
| 2 | Detach the harness for heater from the groove. | 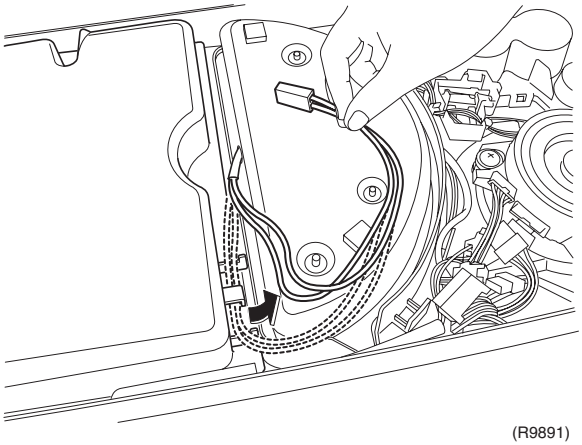 (R9891) | |
| 3 | Remove the duct. | 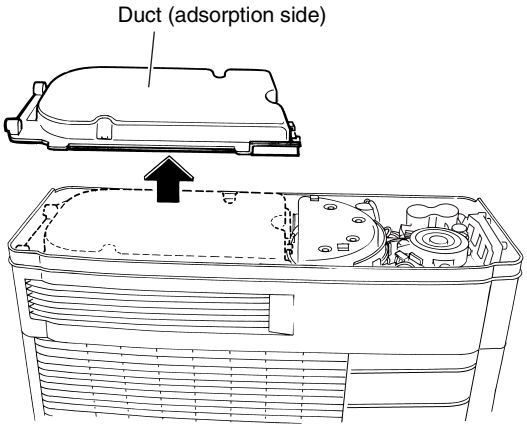  (R9892) | |
| 4 | Release the lead wire for humidifying rotor motor from 2 hooks. | 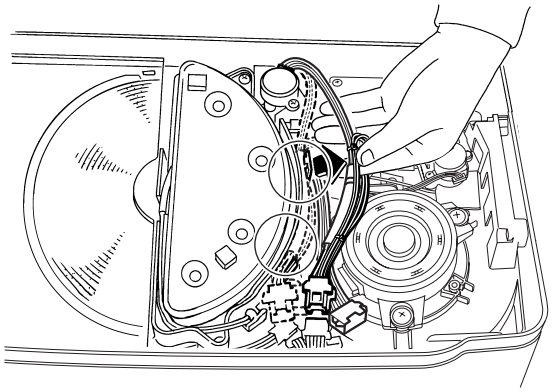 (R9893) | |

| Step | Procedure | | Points |
|---|---|---|---|
| 5 | Remove the 2 screws to remove the heater ASSY. | 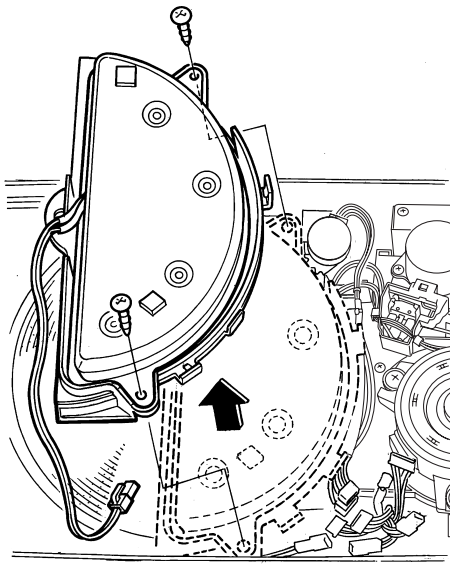 (R9894) | ■ Do not dismount the heater ASSY. |
| 2. Removal of the humidifying rotor. | | | |
| 1 | Detach the lead wire for fan motor from the groove. | 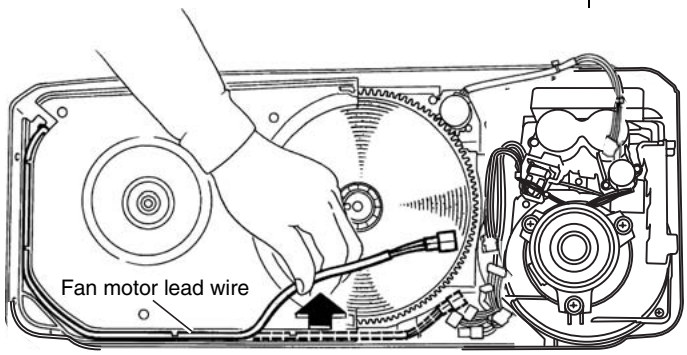  (R9898) | |
| 2 | Remove the bell mouth on adsorption side. | 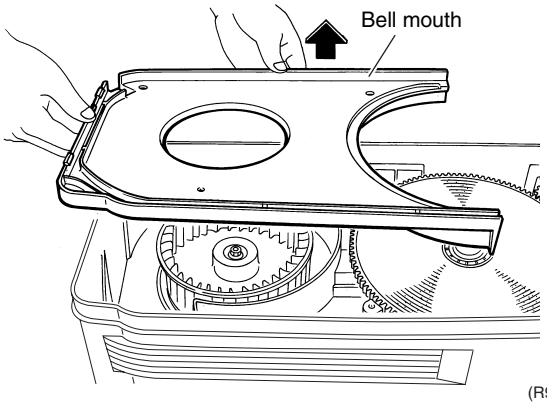  (R9899) | |

| Step | Procedure | | Points |
|---|---|---|---|
| 3 | Lift the humidifying rotor up to remove. | 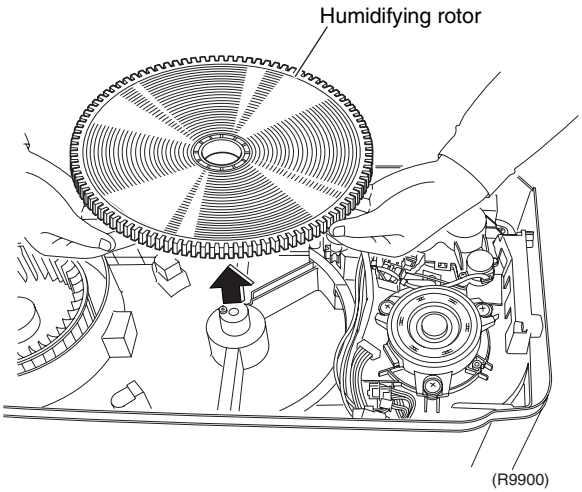 | ■ A heat catalyst (black) is applied on the upper side. |
| 3. Removal of the humidifying rotor motor | | | |
| 1 | Disconnect the connector for the humidifying rotor motor. | 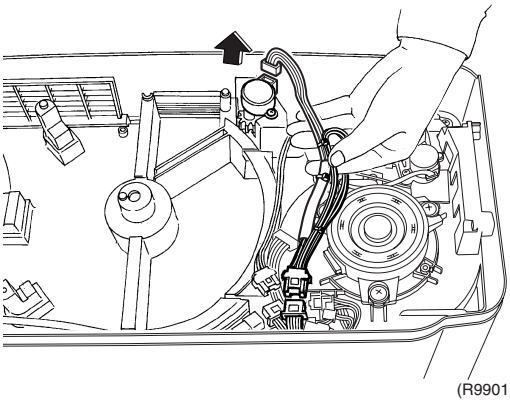 | |
| 2 | Remove the 2 screws of the humidifying rotor motor. | 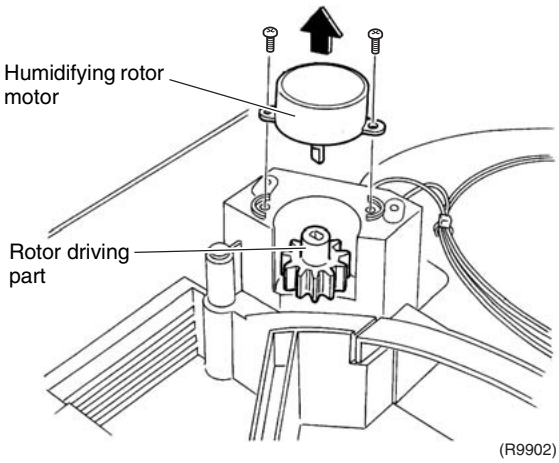 | |

# 2.3 Removal of Damper Motor

**Procedure**

**Warning** **Be sure to wait 10 minutes or more after turning off all power supplies before disassembling work.**

| Step | Procedure | | Points |
|---|---|---|---|
| 1. Removal of the damper motor | | 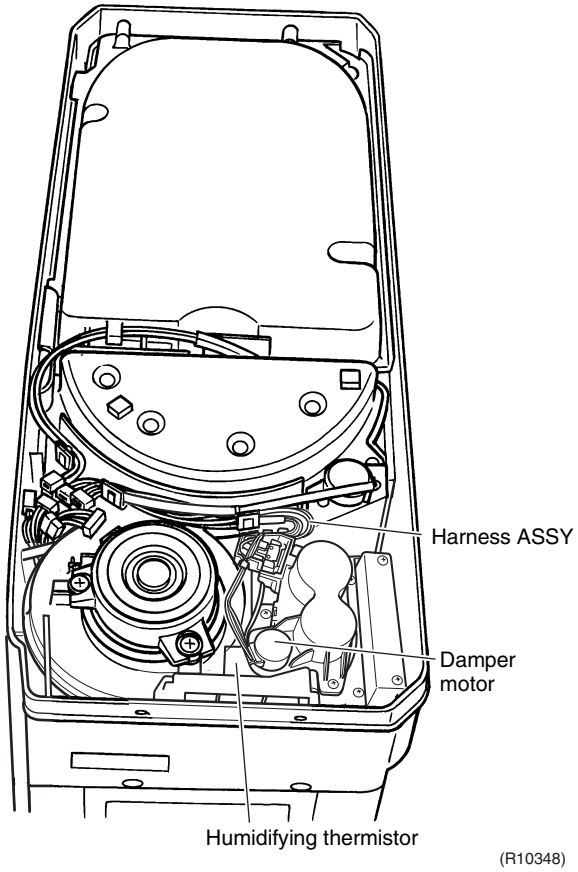 | ■ Disconnect the connector for the humidifying rotor motor. (Refer to page 219.) |
| 1 | Disconnect the connector for the damper motor. | 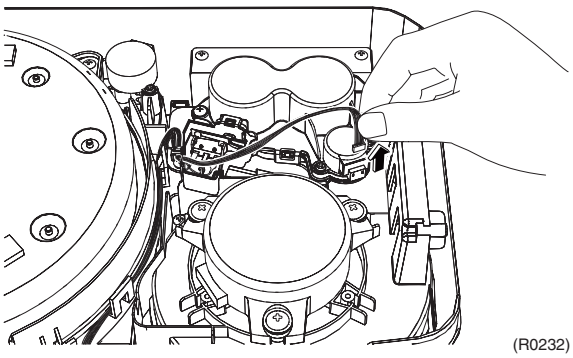 | |

| Step | Procedure | | Points |
|---|---|---|---|
| 2 | Remove the 2 screws. | 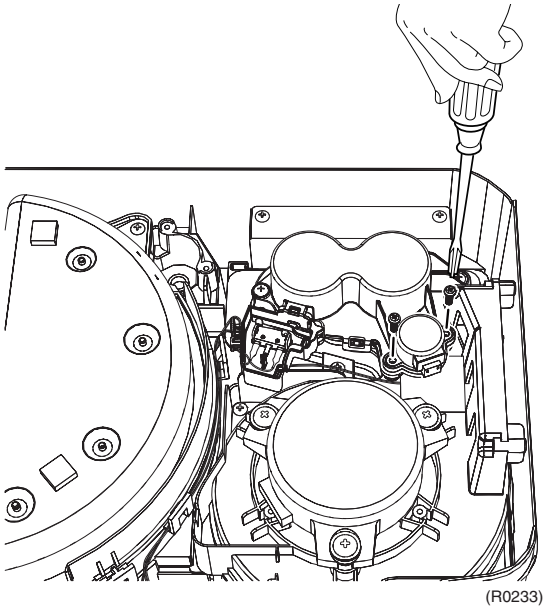 (R0233) | |
| 3 | Remove the damper motor. | 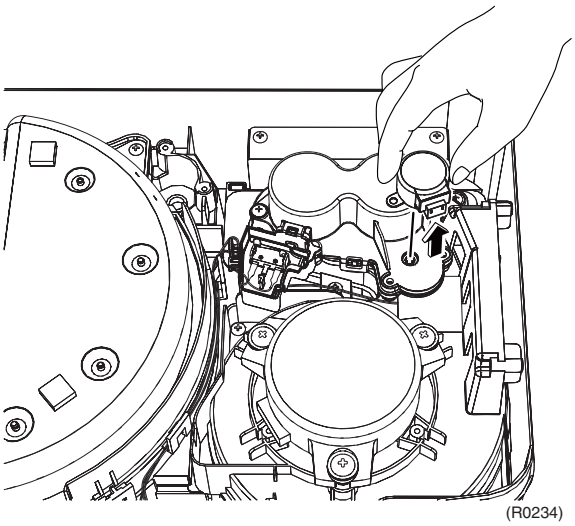 (R0234) | |

# 2.4 Removal of Limit Switch / Humidifying Thermistor

**Procedure**

**Warning** **Be sure to wait 10 minutes or more after turning off all power supplies before disassembling work.**

| Step | Procedure | | Points |
|---|---|---|---|
| 1. Removal of the limit switch | | | |
| 1 | Open the hooks. | 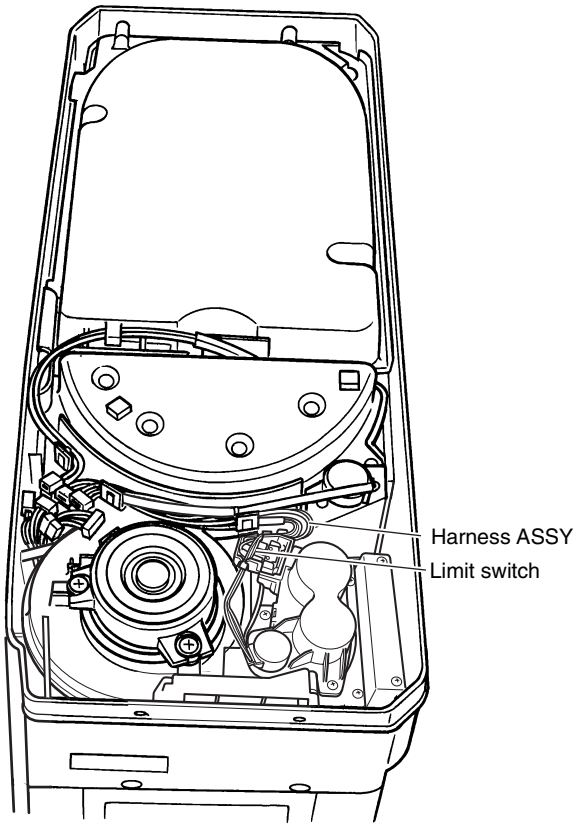 <br>(R10812)<br> 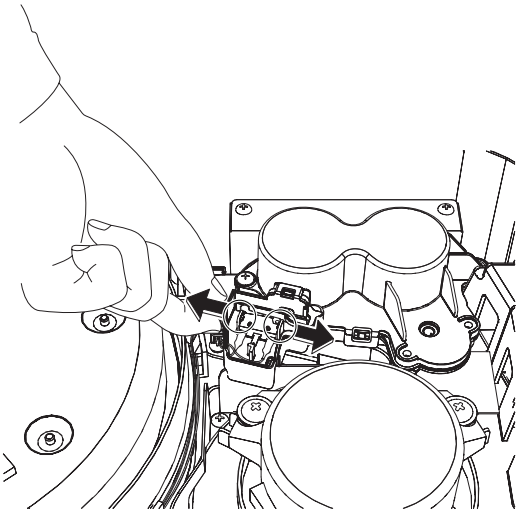 <br>(R0235) | |

| Step | Procedure | | Points |
|---|---|---|---|
| 2 | Push up the limit switch with a flat screwdriver. | 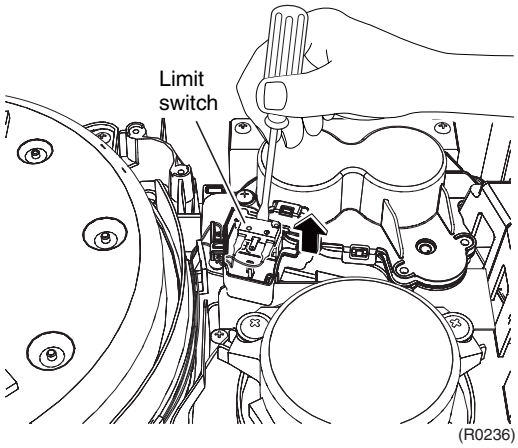 (R0236) | |
| 3 | Disconnect the terminals. | 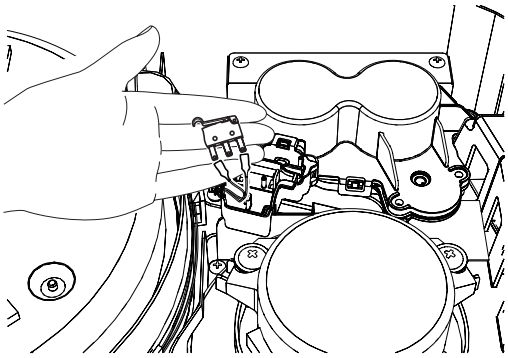 (R0237) | |
| 4 | Release the harness from the hooks and remove the harness ASSY. | 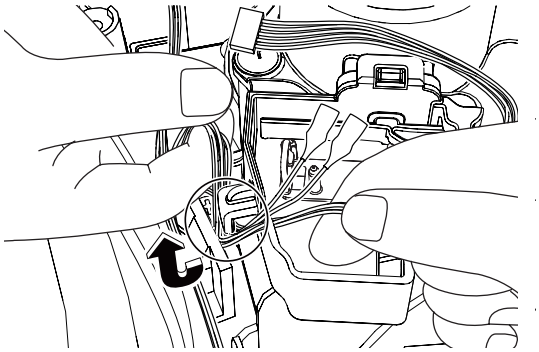 (R0238) 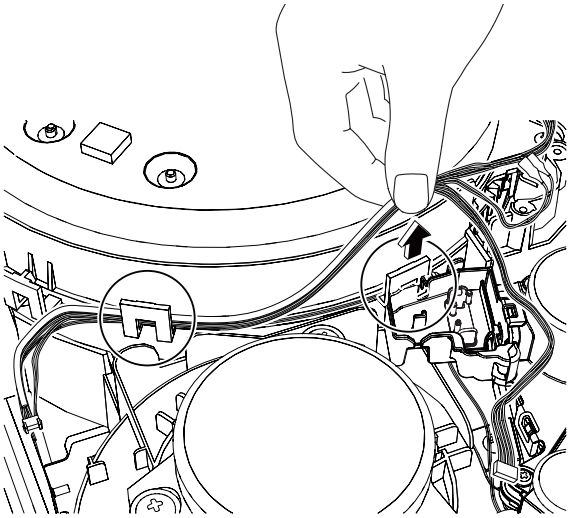 (R0239) | |

| Step | | Procedure | Points |
|---|---|---|---|
| 2. Removal of the humidifying thermistor | | | ■ When replacing the humidifying thermistor, order a seal material together. |
| 1 | Peel off the seal material. | 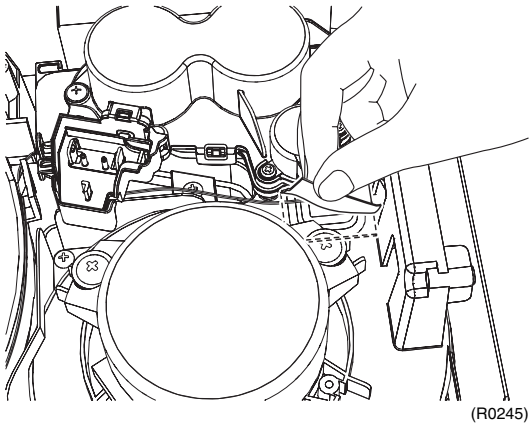 (R0245) | |
| 2 | Pull out the humidifying thermistor. | 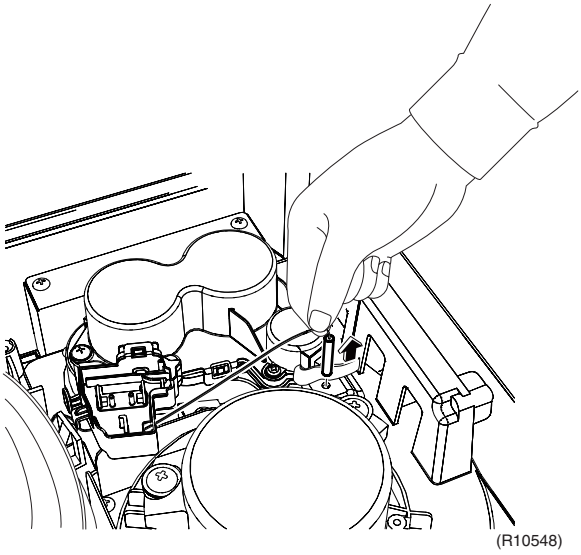 (R10548) | ■ When reassembling, put the harness through under the limit switch cover. |
| | | 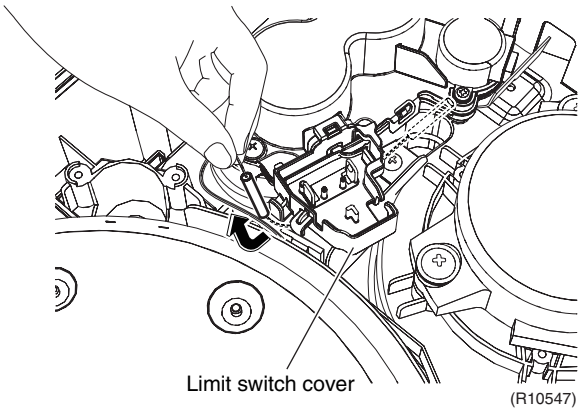  (R10547) | |

# 2.5 Removal of the Fan-valve-duct ASSY

**Procedure**

**Warning** **Be sure to wait 10 minutes or more after turning off all power supplies before disassembling work.**

| Step | Procedure | | Points |
|---|---|---|---|
| | | 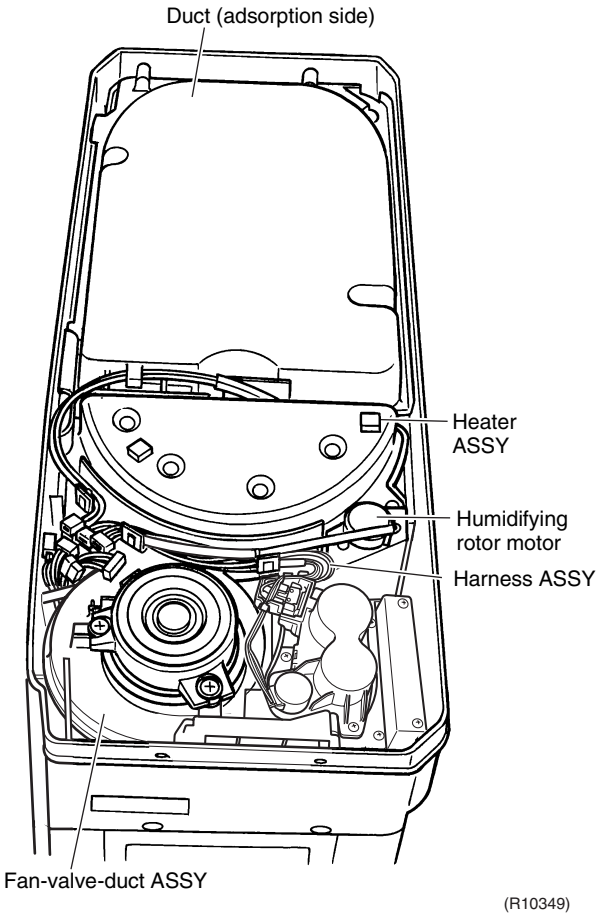 | **Preparation**<br>■ Remove the heater ASSY and the humidifying rotor.<br>■ The humidifying rotor is located under the heater ASSY and the duct. |
| 1 | Remove the 7 screws of the fan-valve-duct ASSY. | 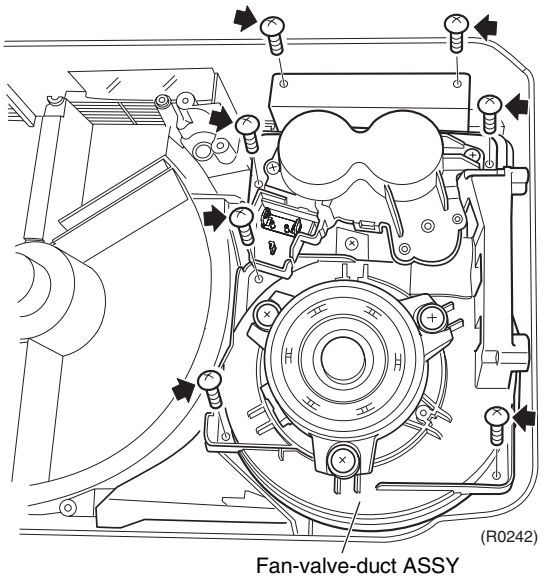 | ■ Do not dismantle the fan-valve-duct ASSY. Replace it as a unit. |

| Step | Procedure | | Points |
|---|---|---|---|
| 2 | Release the 2 hooks on the right side. | 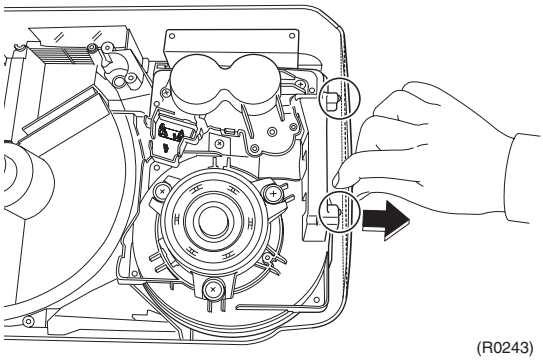 (R0243) | ■ Release the hooks while bending the right side panel. |
| 3 | Lift up the fan-valve-duct ASSY to remove. | 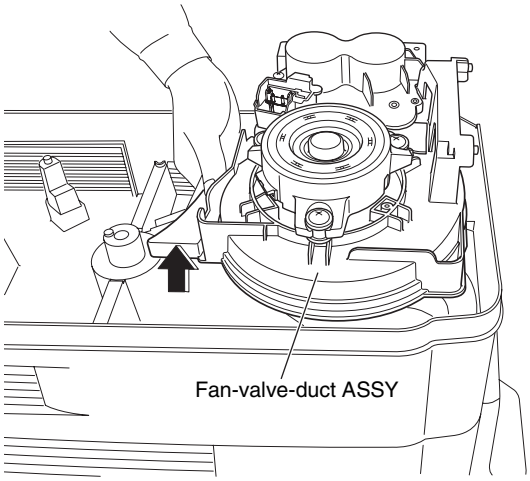  (R0244) | |

# 2.6 Removal of Hygroscopic Fan Rotor / Hygroscopic Fan Motor

**Procedure**

**Warning** **Be sure to wait 10 minutes or more after turning off all power supplies before disassembling work.**

| Step | | Procedure | Points |
|---|---|---|---|
| 1. Removal of the hygroscopic fan rotor ASSY | | | **Preparation**<br>■ Remove the humidifying rotor according to "Removal of Humidifying Rotor". |
| 1 | Disconnect the connector for fan motor and remove the bell mouth on adsorption side. | 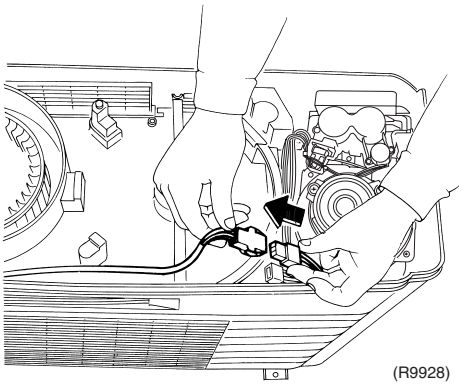 | |
| 2 | Unscrew the fan fixing nut (M6) of the hygroscopic fan rotor ASSY (sirocco fan rotor ASSY) and remove. | 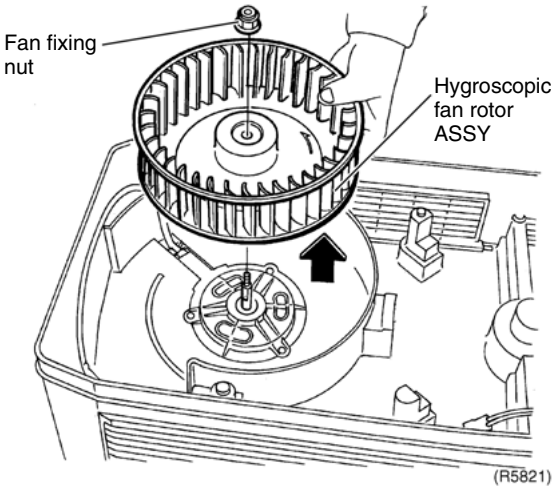 | ■ When reassembling, align the ▼ mark and D cut of the motor shaft.<br>■ Spanner size: 10mm |
| 2. Removal of the hygroscopic fan motor | | | ■ Lift the motor cover first and pull out.<br> 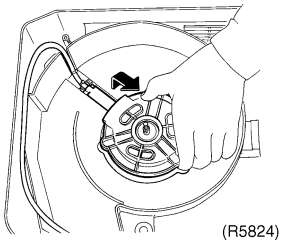 |
| 1 | Remove the 3 screws of the motor cover. | 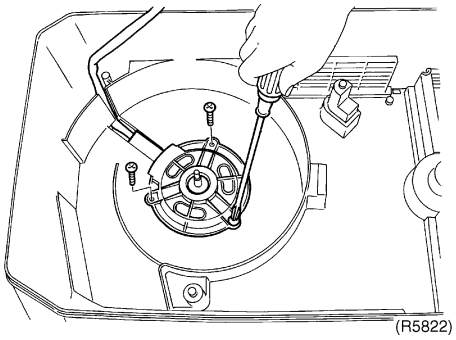 | |
| 2 | Remove the hygroscopic fan motor. | 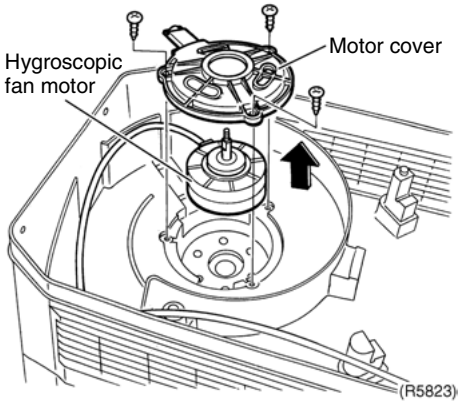 | |

# 2.7 Removal of Panels and Plates

**Procedure**

**Warning** **Be sure to wait 10 minutes or more after turning off all power supplies before disassembling work.**

| Step | Procedure | | Points |
|---|---|---|---|
| 1 | External appearance. | 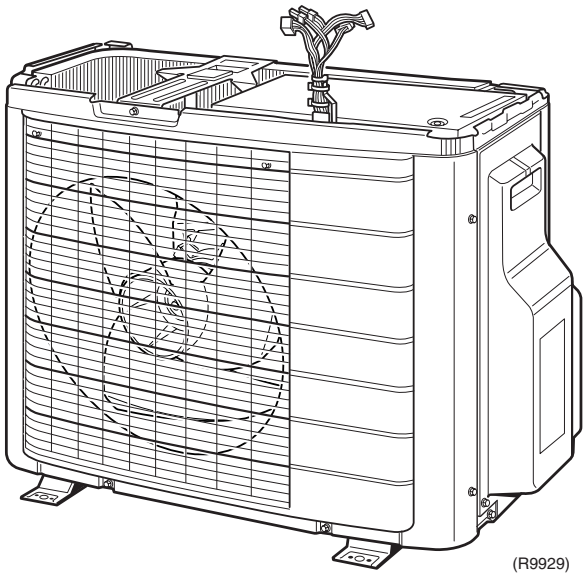 (R9929) 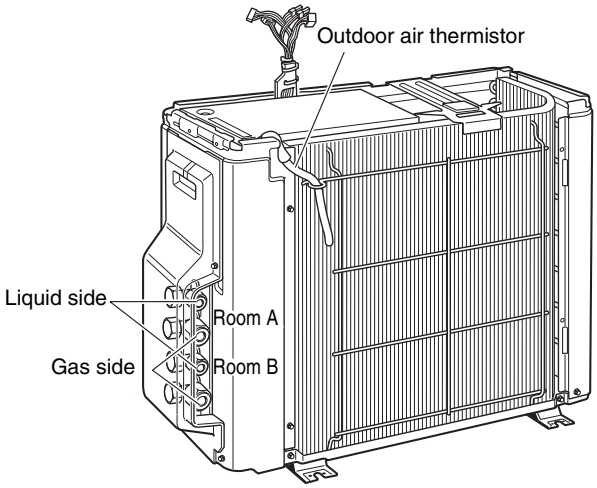  (R9930) | ■ Remove the humidifying unit.<br>■ Do not release the mounting plate at this point. |
| 2 | Remove the 8 screws to remove the front panel. | 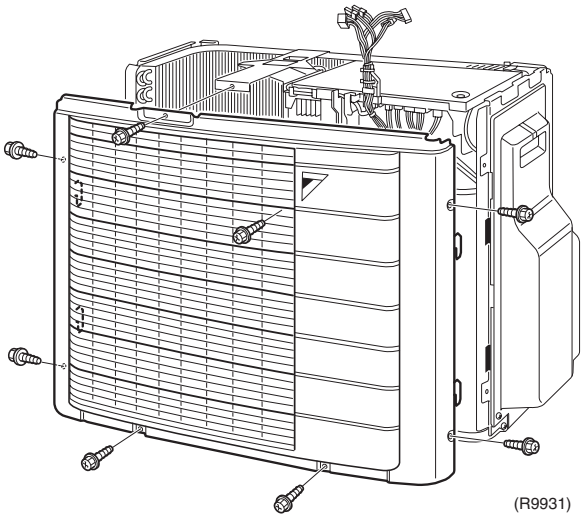 (R9931) | ■ The front panel has 4 hooks.<br>■ The bell mouth can not be removed. |

| Step | Procedure | | Points |
|---|---|---|---|
| 3 | Remove the 4 screws of the discharge grille. | 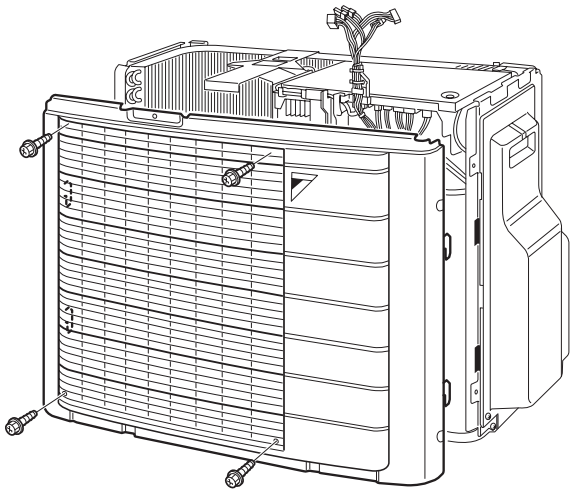 (R10345) | |
| 4 | Release the 4 hooks and remove the discharge grille. | 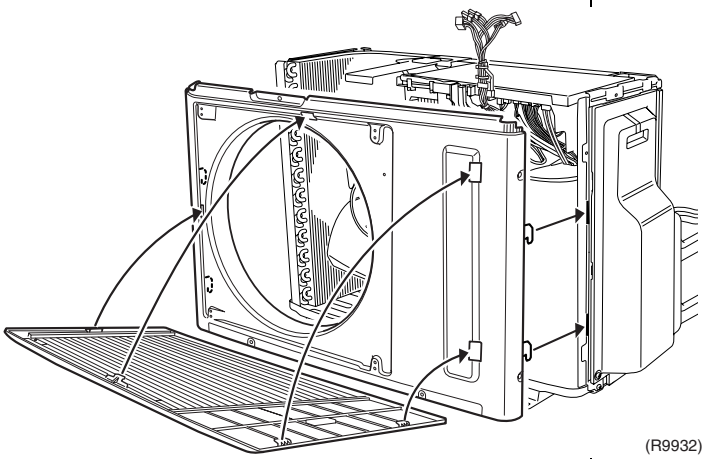 (R9932) | ■ When reassembling, make sure to fit the 4 hooks. |
| 5 | Remove the 2 screws of the stop valve cover and remove it. | 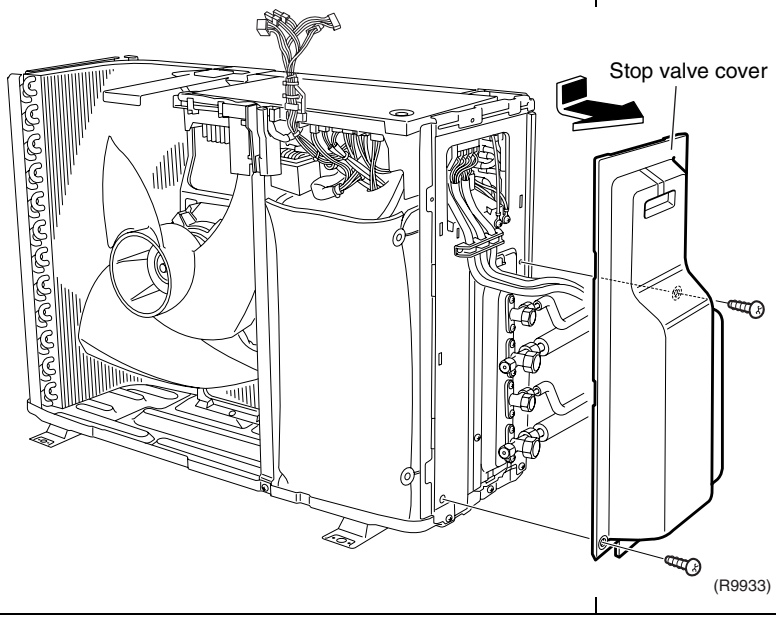  (R9933) | |

| Step | Procedure | | Points |
|---|---|---|---|
| | | 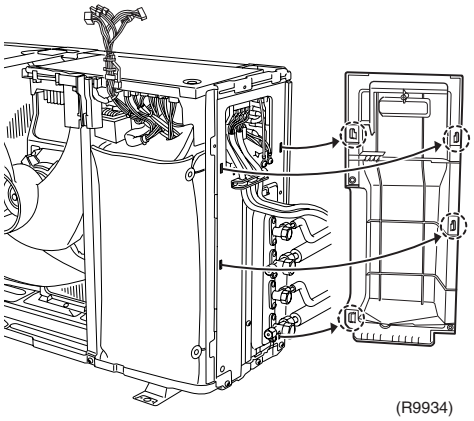 (R9934) | ■ When reassembling the stop valve cover, make sure to fit the 4 hooks. |

# 2.8 Removal of Electrical Box

**Procedure**

**Warning** **Be sure to wait 10 minutes or more after turning off all power supplies before disassembling work.**

| Step | Procedure | | Points |
|---|---|---|---|
| 1. Disconnect the connecting wires | | 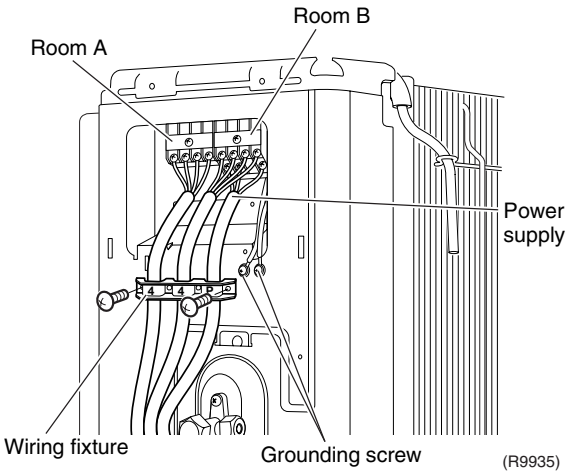 | ■ When reassembling, fasten the wires with screws on the terminal board.<br>■ The terminal board is united resin formation. |
| 1 | Remove the 2 grounding screws. Remove the 2 screws to remove the wiring fixture. Then, remove the all screws for the connectors to disconnect the power supply cable and the connecting wires. | | |
| 2. Removal of the electrical box | | 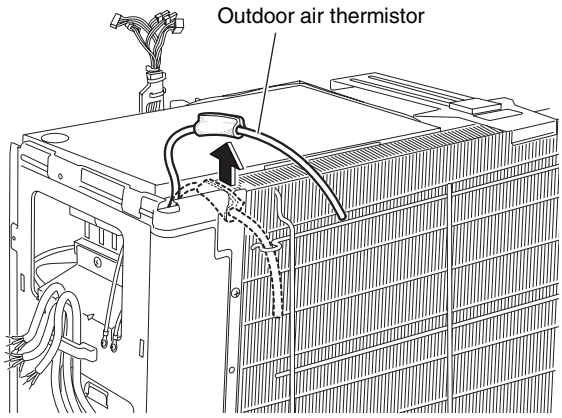 | |
| 1 | Release the outdoor air thermistor from the holder. | | |
| 2 | Lift up the guard net to remove. | 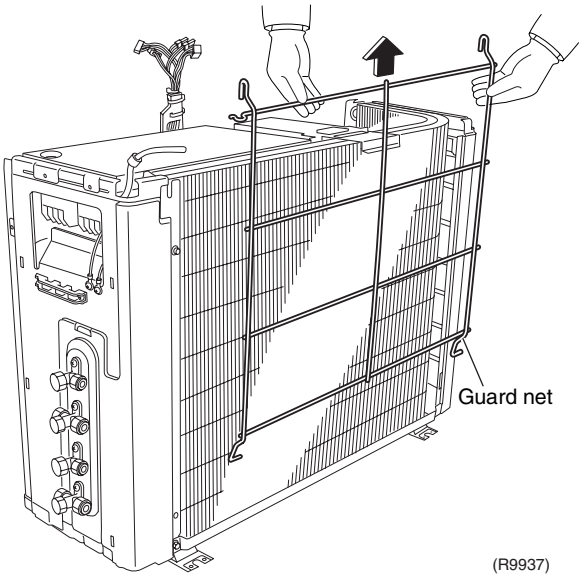 | |

| Step | Procedure | | Points |
|---|---|---|---|
| 3 | Release the mounting plate from the hook. | 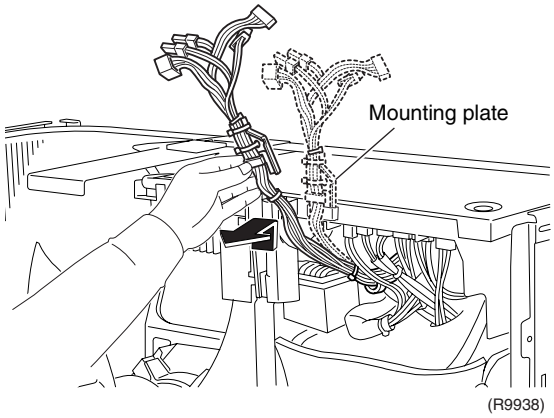 | ■ When reassembling, make sure to hook the mounting plate. |
| 4 | Disconnect the connector for the fan motor [S70]. | 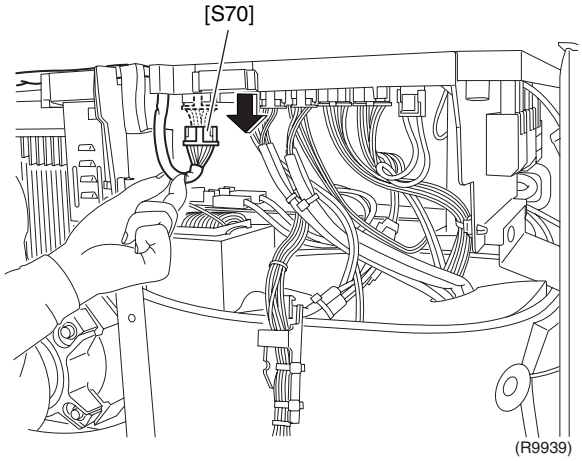 | |
| 5 | Release the lead wire for the fan motor from the hooks. | 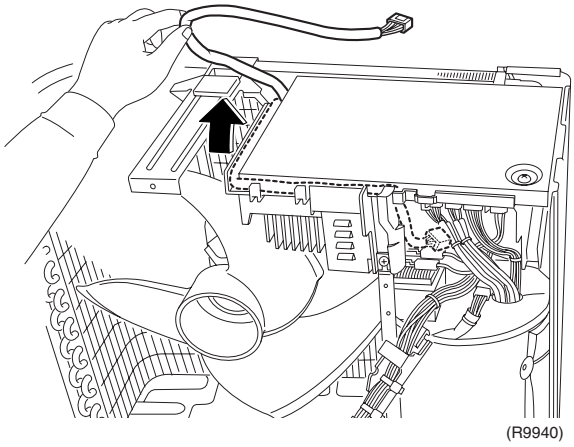 | |
| 6 | Disconnect the connector for the gas pipe thermistor [S91] and for the liquid pipe thermistor [S92]. | 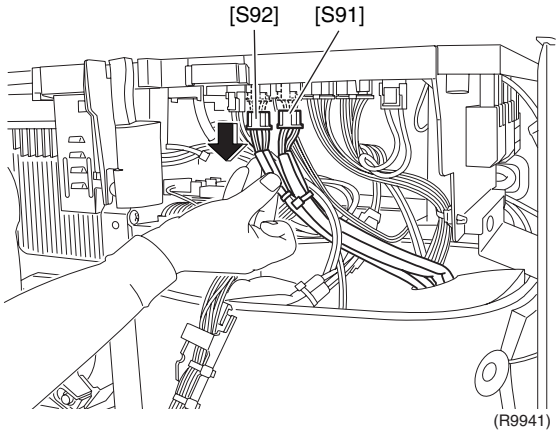 | [S91] : Gas pipe thermistor (white)<br>[S92] : Liquid pipe thermistor (red) |

| Step | Procedure | | Points |
|---|---|---|---|
| 7 | Disconnect the connector for the overload protector [S40]. | 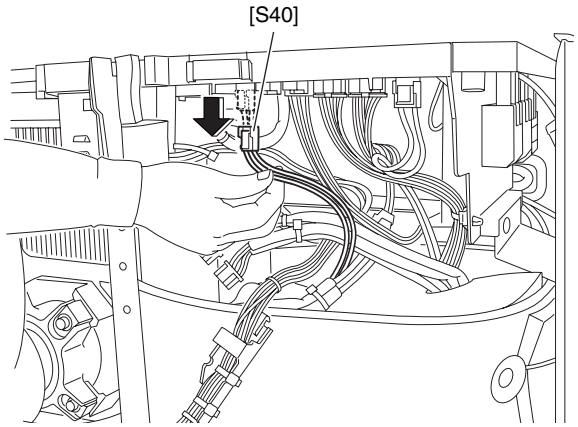 (R9942) | [S40] : Overload protector |
| 8 | Disconnect the connectors [S20], [S21], and [S80]. | 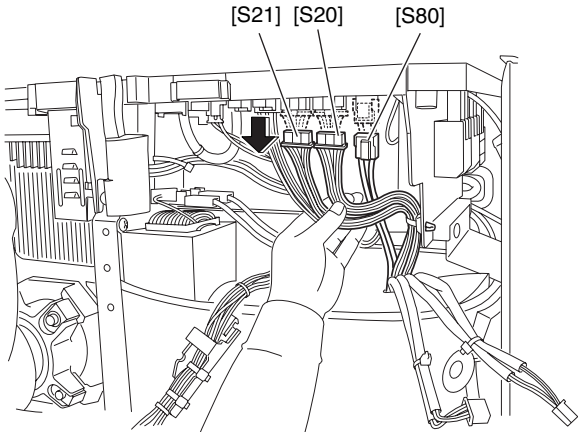 (R9943) | [S20] : (white) Electronic expansion valve coil for room A<br>[S21] : (red) Electronic expansion valve coil for room B<br>[S80] : Four way valve coil |
| 9 | Disconnect the connector for the relay harness of compressor. | 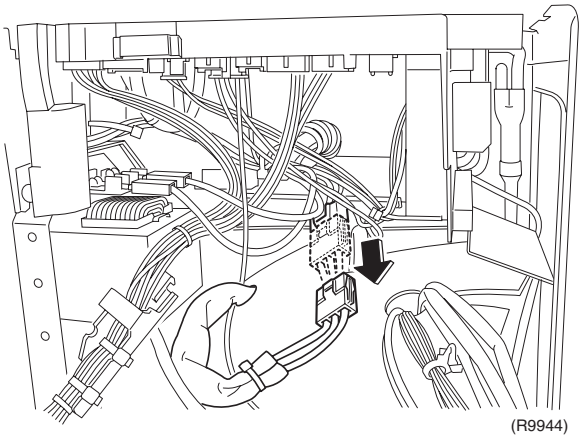 (R9944) | |
| 10 | Disconnect the 2 connectors for the reactor. | 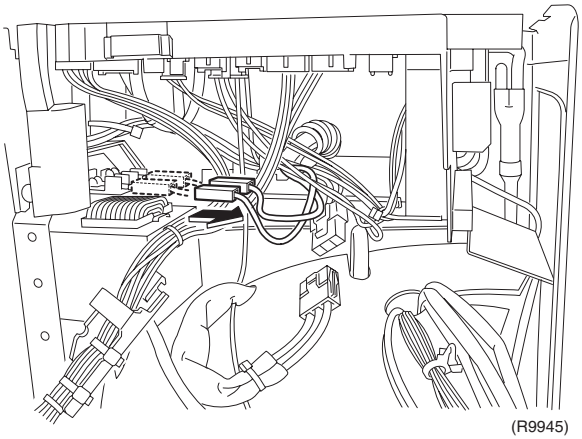 (R9945) | |

| Step | Procedure | | Points |
|---|---|---|---|
| 11 | Detach the discharge pipe thermistor. | 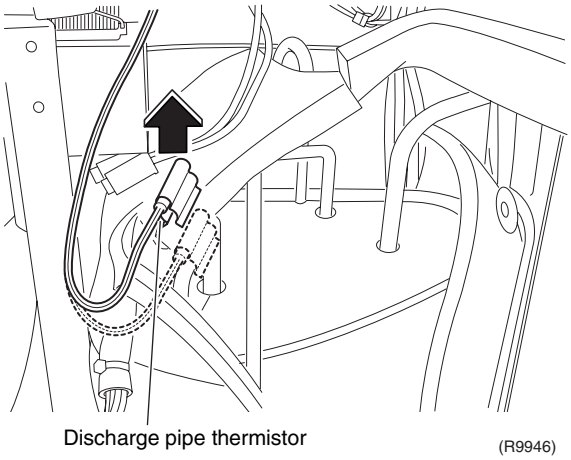 | ■ Meet the edge of the thermistor and the clip.<br>■ Be careful not to lose the clip for the discharge pipe thermistor.<br> 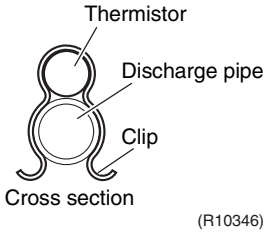 |
| 12 | Disconnect the connector for the thermistor ASSY [S90]. | 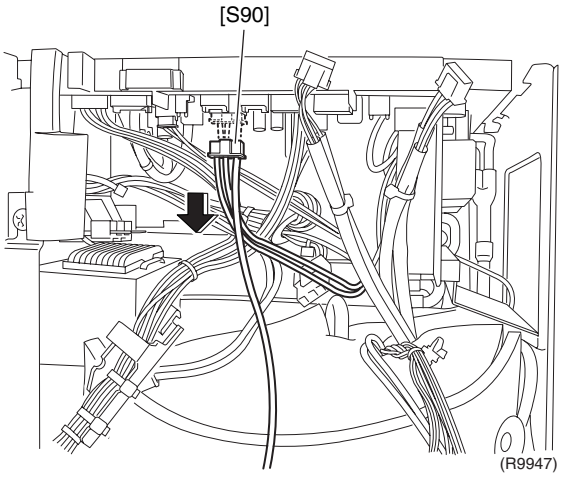 | [S90] : Thermistor ASSY (Outdoor air, Heat exchanger, Discharge pipe) |
| 13 | Undo the wire clamp for the thermistor ASSY under the electrical box. | 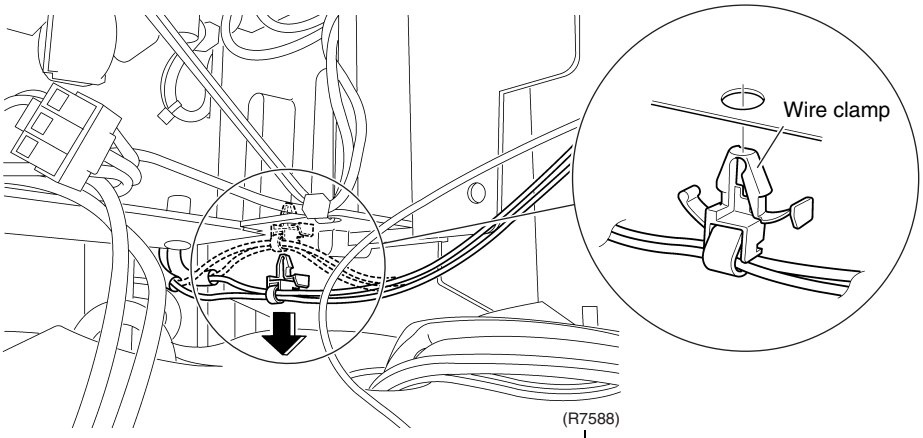 | |
| 14 | Cut the clamp. | 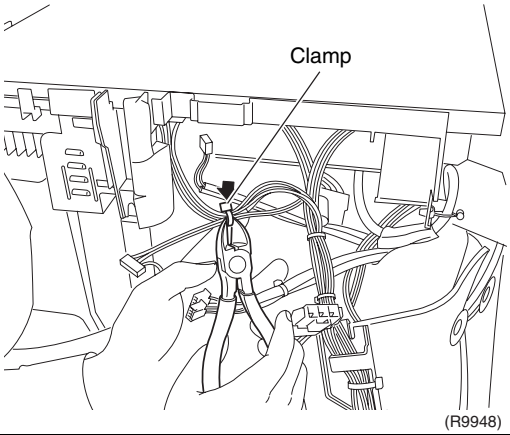 | |

| Step | Procedure | | Points |
|---|---|---|---|
| 15 | Remove the screw on the right side of the electrical box. | 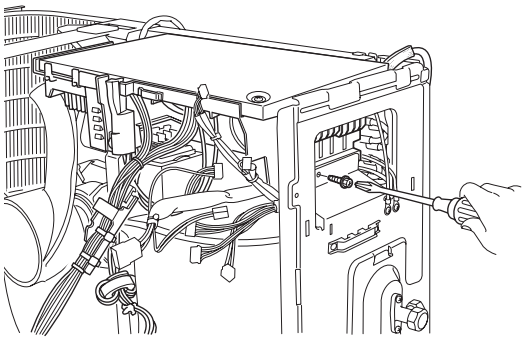 (R9949) | |
| 16 | Remove the grounding screws of earth wires. | 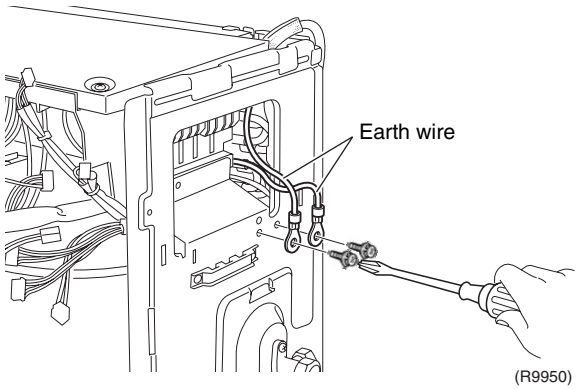  (R9950) | |
| 17 | Remove the screw in front of the electrical box. | 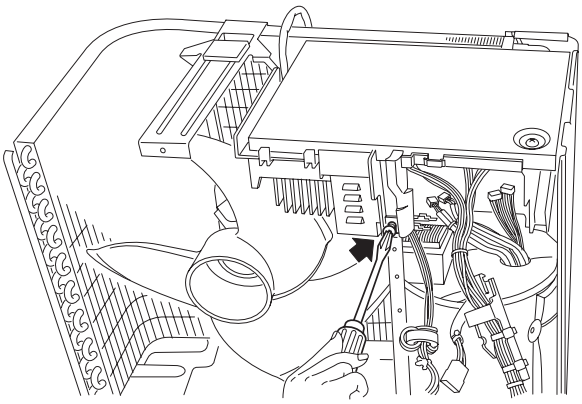 (R9951) | |
| 18 | Lift up the electrical box to remove. | 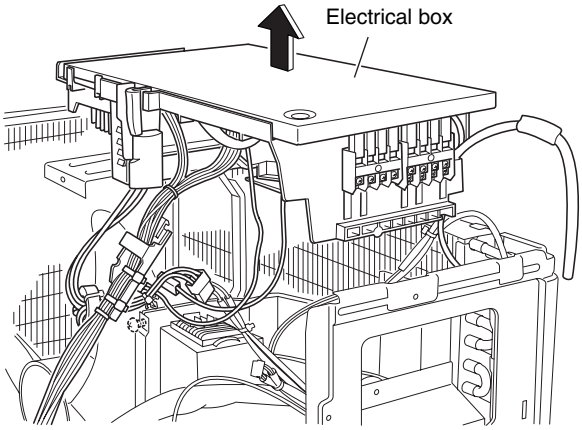  (R9952) | |

# 2.9 Removal of PCB

**Procedure**

**Warning** **Be sure to wait 10 minutes or more after turning off all power supplies before disassembling work.**

| Step | Procedure | | Points |
|---|---|---|---|
| 1. Removal of the control PCB | | | **Preparation**<br>■ Remove the panels, plates, and electrical box according to the removal procedure.<br>■ The control PCB is adopted upside-down.<br>■ The lead-free solder (PbF) is used on PCB. When exchange, use exclusive solder and soldering gun. |
| 1 | Remove the screw of the electrical box cover. | 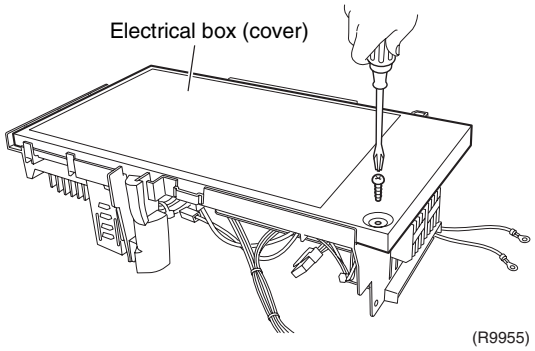 | |
| | | 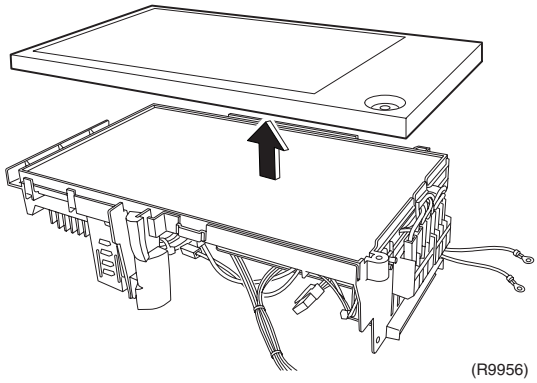 | |
| 2 | Detach the insulation sheet. | 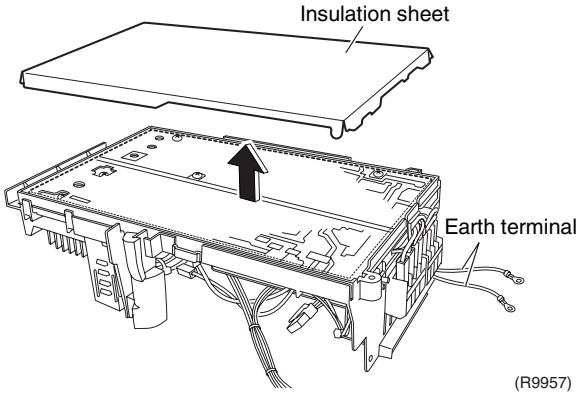 | ■ The trimmed part goes front.<br>■ The terminal board is united with thermal fuse. |

| Step | Procedure | | Points |
|---|---|---|---|
| 3 | Remove the 2 screws of the terminal boards. | 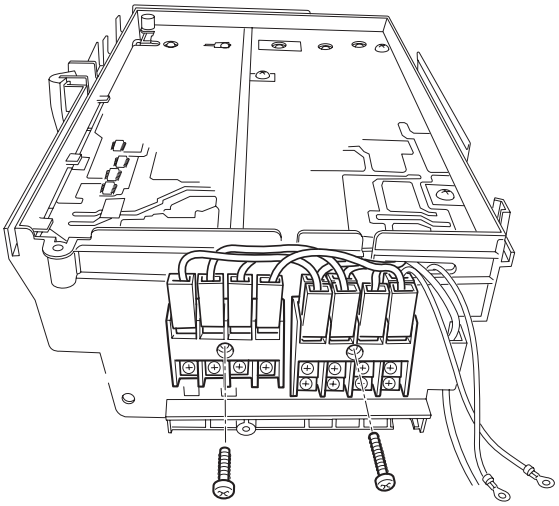 (R9958) | |
| 4 | Release the outdoor air thermistor from the hook. | 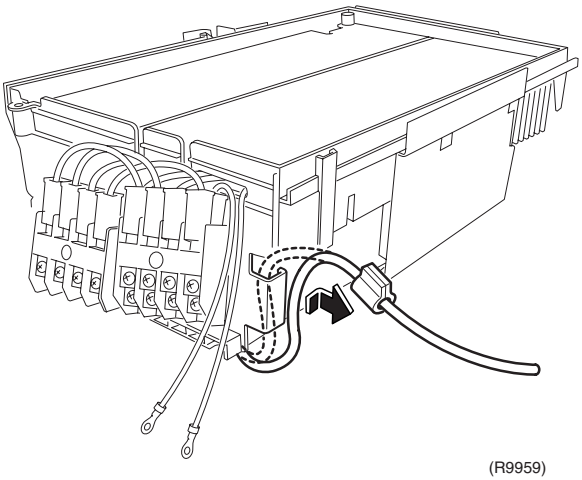 (R9959) | |
| 5 | Remove the 2 screws and detach the 1 clip to remove the radiation shield plate. | 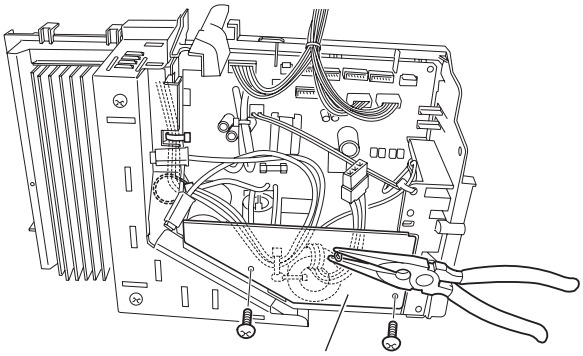  (R9960) | |

| Step | Procedure | | Points |
|---|---|---|---|
| 6 | Cut off the clamps at 2 locations and disconnect the wire harnesses. | 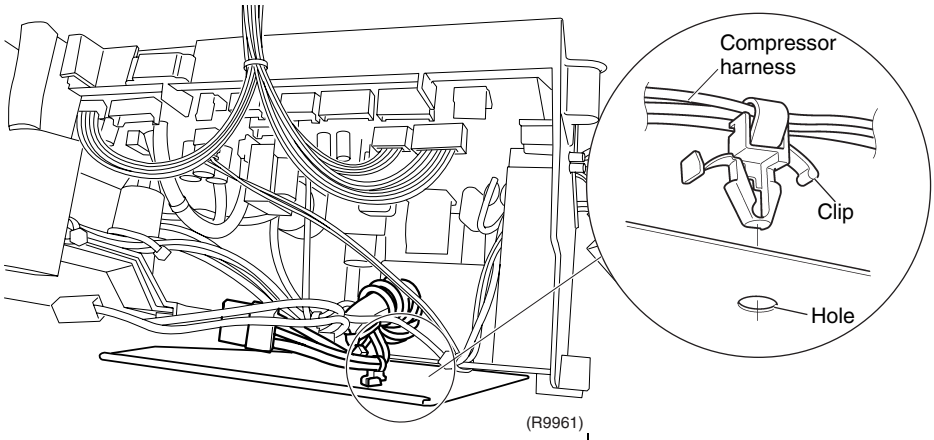 <br>(R9961)<br> 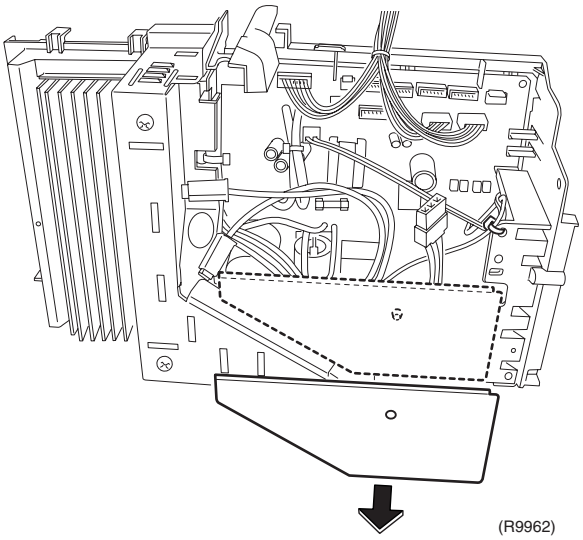 <br>(R9962)<br> 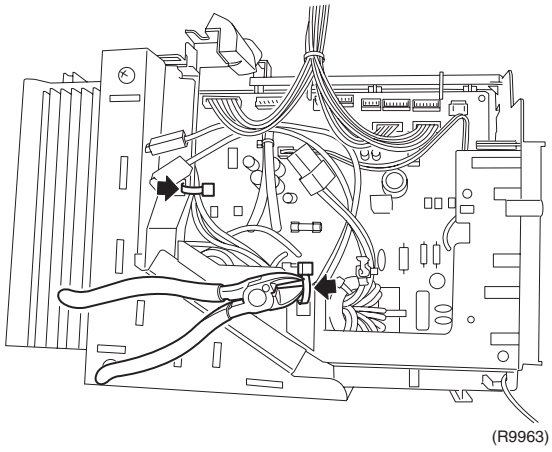 <br>(R9963) | ■ The clip is push mount type. |

| Step | Procedure | | Points |
|---|---|---|---|
| 7 | Remove the 7 screws in total. | 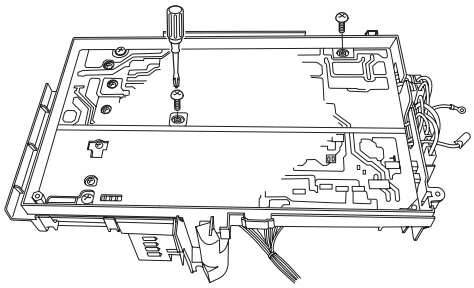 (R9964) 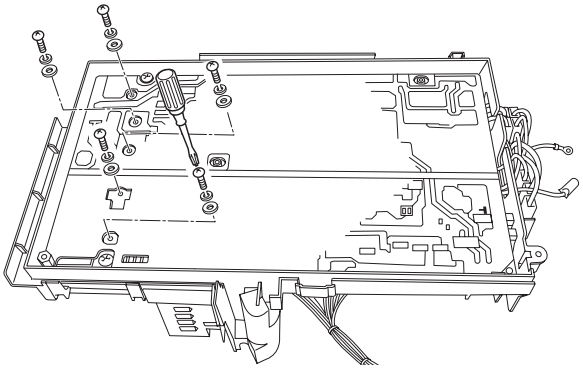 (R9965) | |
| 8 | Lift up the back side slightly and release the hooks of the front. | 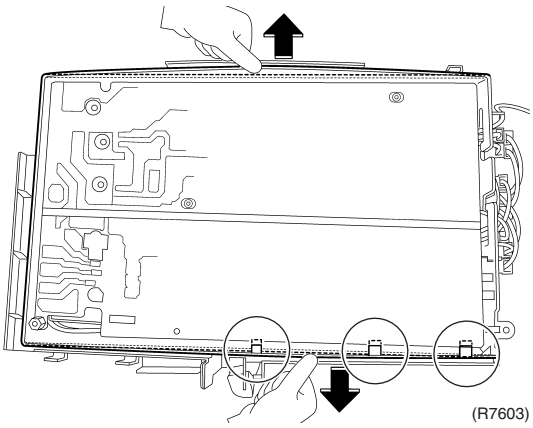 (R7603) | ■ When reassembling, make sure that the hooks of the electrical box are placed on the PCB. |
| 9 | Release the lead wires from the hook and remove the terminal boards. | 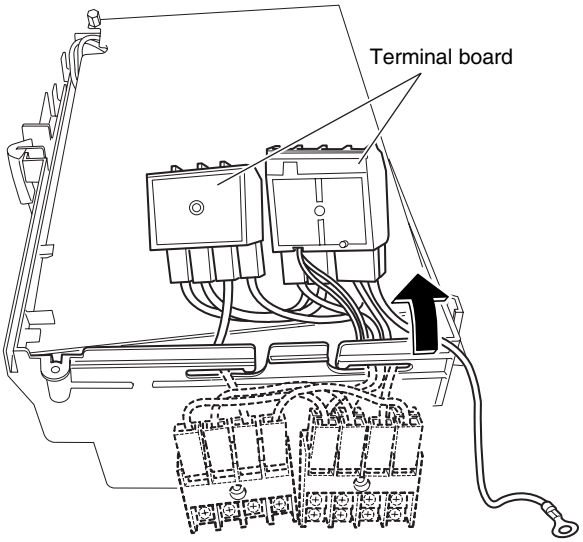  (R9966) | |

| Step | Procedure | | Points |
|---|---|---|---|
| 10 | Lift up the control PCB to remove. | 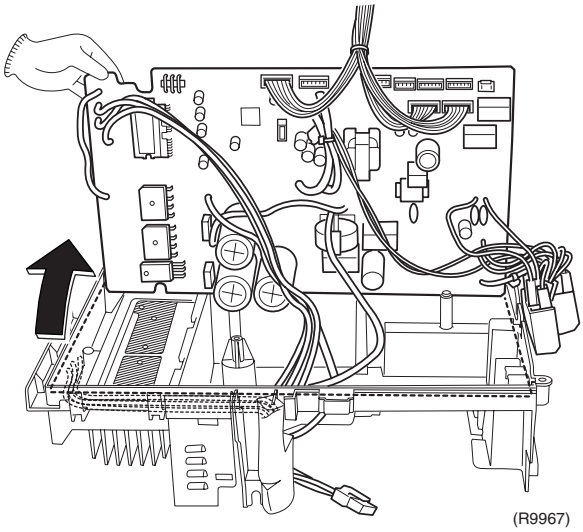 (R9967) 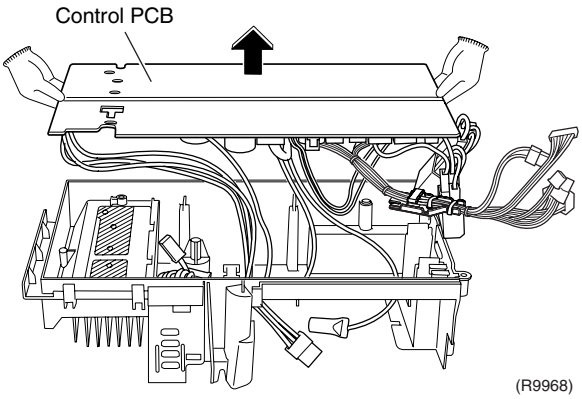  (R9968) | |

| Step | Procedure | | Points |
|---|---|---|---|
| 11 | Control PCB | 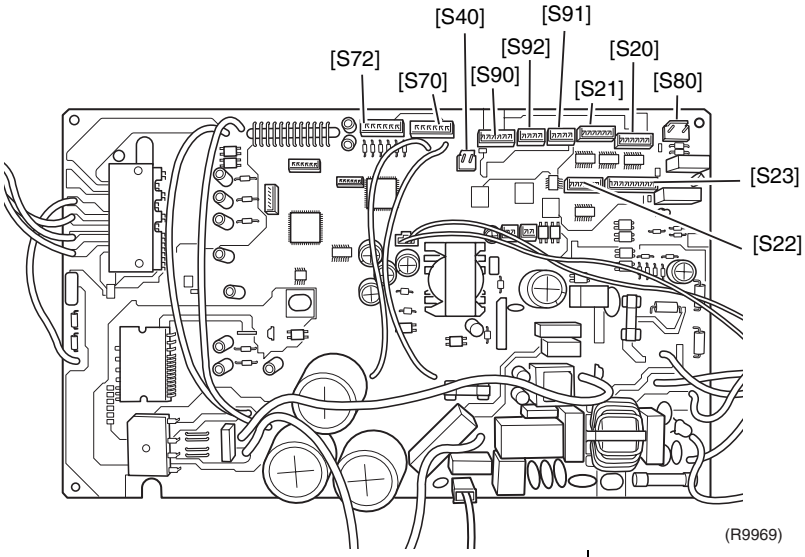 | ■ See page 12 for detail.<br><br>[S20] : Electronic expansion valve coil for room A<br>[S21] : Electronic expansion valve coil for room B<br>[S22] : Damper motor<br>[S23] : Rotor motor<br>[S40] : Overload protector<br>[S70] : DC Fan motor<br>[S72] : Humidifying fan motor<br>[S80] : Four way valve coil<br>[S90] : Discharge pipe / Heat exchanger / Outdoor air thermistor<br>[S91] : Gas pipe thermistor<br>[S92] : Liquid pipe thermistor |
| 12 | Remove the 2 screws of the radiation fin. | 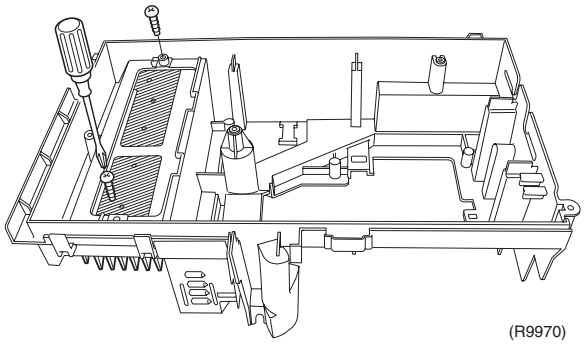 <br> 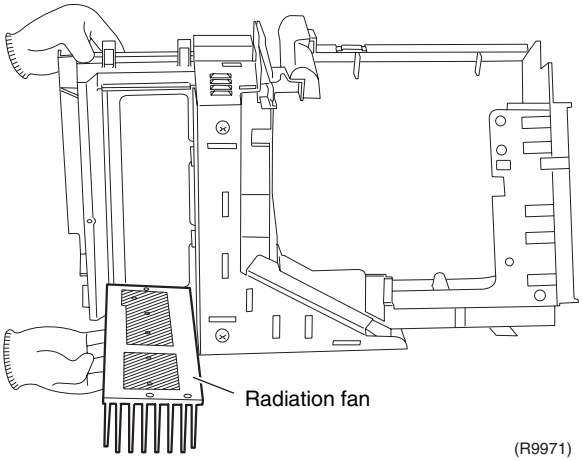 | ■ When reassembling, be sure to apply silicon grease for encouraging the heat radiation.<br>→ See page 257 for detail. |

# 2.10 Removal of Sound Blanket

**Procedure**

**Warning** **Be sure to wait 10 minutes or more after turning off all power supplies before disassembling work.**

| Step | Procedure | | Points |
|---|---|---|---|
| 1. Removal of the right side panel | | 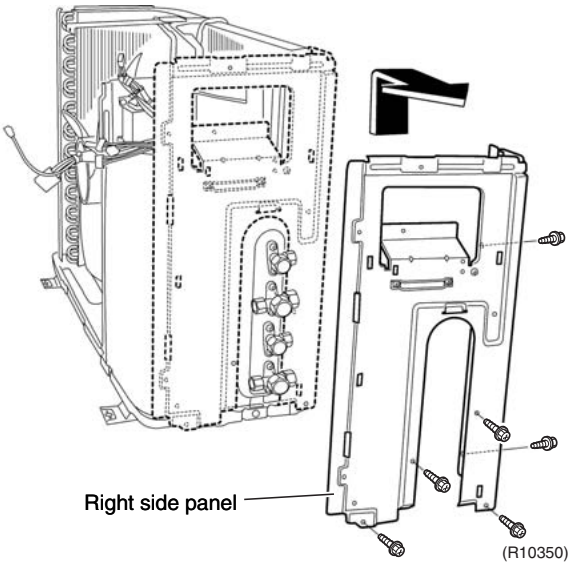 | **Preparation**<br>■ Remove the electrical box beforehand. |
| 1 | Remove the 6 screws to remove the right side panel. | | |
| 2. Removal of the partition plate | | 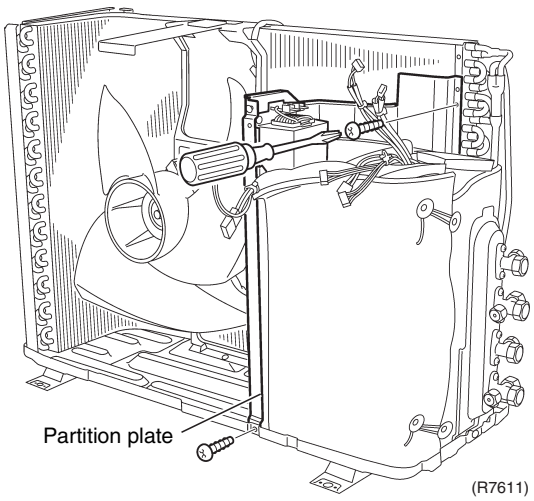 | ■ When reassembling, make sure to catch the lower hook of the partition plate. |
| 1 | Remove the 2 screws to remove the partition plate. | | |
| 2 | Since there are hooks on the partition plate, lift up once and pull out toward yourself to remove it. | 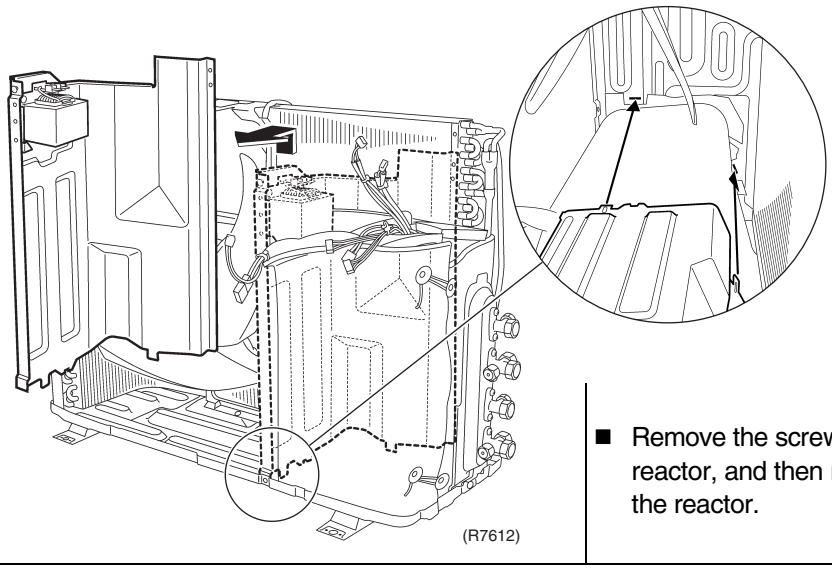 | ■ Remove the screw of the reactor, and then remove the reactor. |

| Step | Procedure | Points |
|---|---|---|
| 3. Removal of the sound blanket | | |
| 1 | Release the fixing strings, open the sound blanket (outside sleeve) and pull it out. 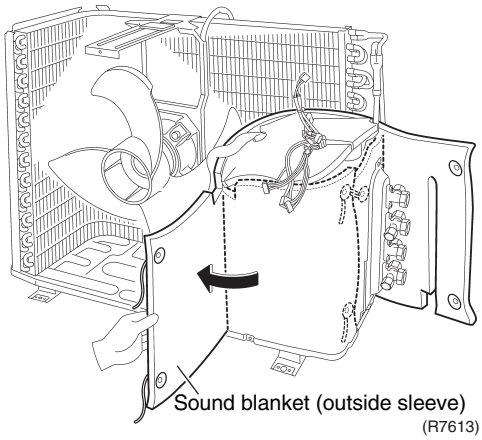  | |
| 2 | Lift up the sound blanket (top) to remove. 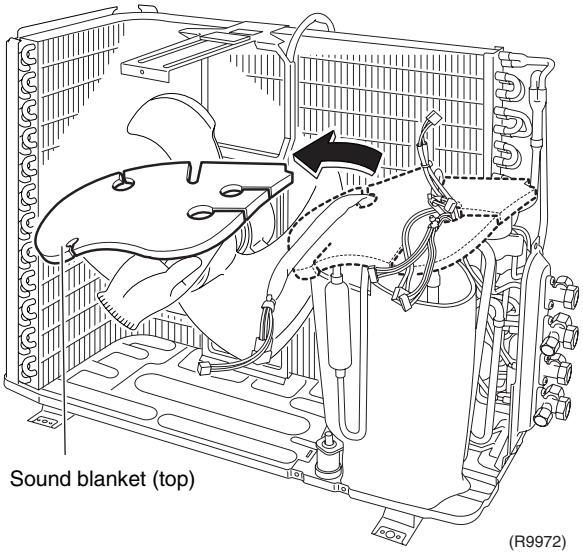  | ■ Since the piping ports are torn easily, remove the blanket carefully. 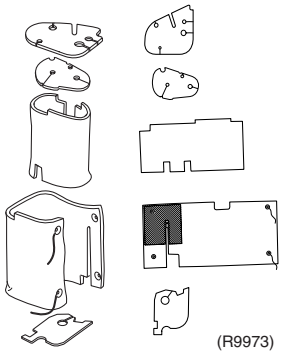  |
| 3 | Lift up the sound blanket (inside-top) to remove. 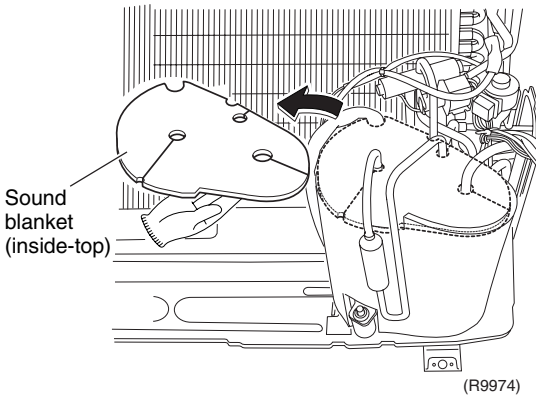  | ■ The sound blanket (inside-top) is attached only for 40 class. |

| Step | Procedure | | Points |
|---|---|---|---|
| 4 | Open the sound blanket (inside sleeve) and pull it out. | 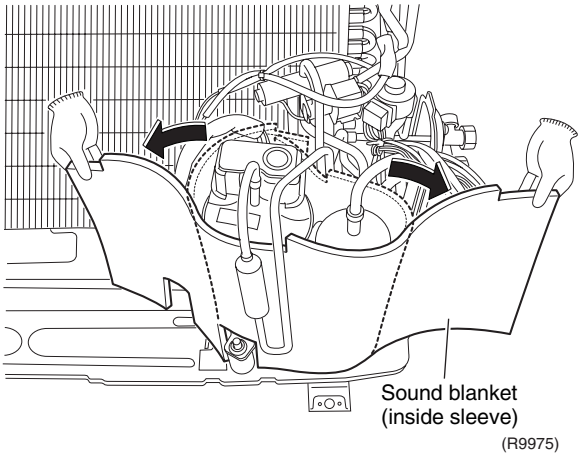 | |
| 5 | Pull out the sound blanket (bottom). | 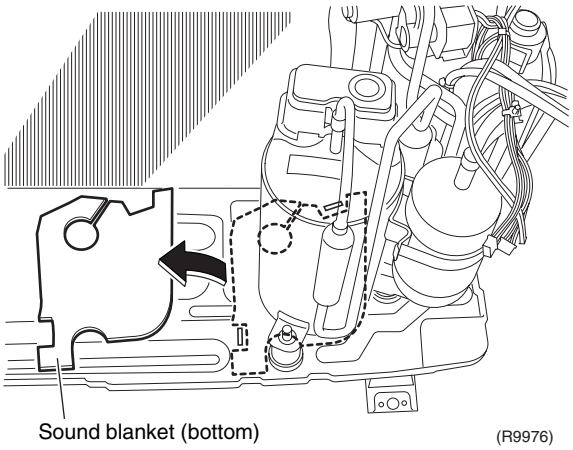 | |

# 2.11 Removal of the Propeller Fan / Fan Motor

**Procedure**

**Warning** **Be sure to wait 10 minutes or more after turning off all power supplies before disassembling work.**

| Step | Procedure | | Points |
|---|---|---|---|
| 1. Removal of the propeller fan | | 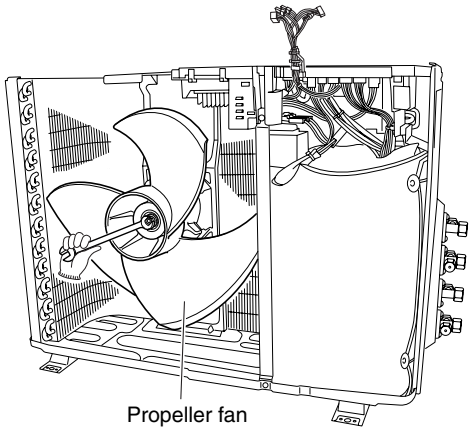 (R9977) | ■ Spanner size: 10mm |
| 1 | Unscrew the washer fitted nut (M6) by an open-ended spanner to remove the propeller fan. | 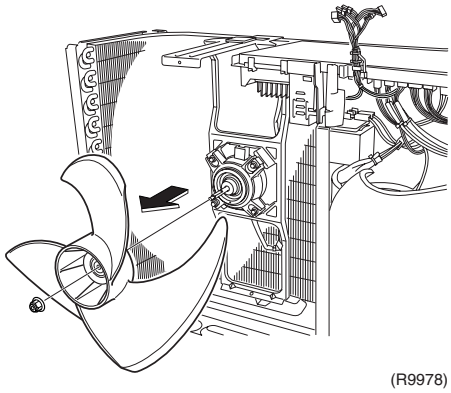 (R9978) | |
| | | 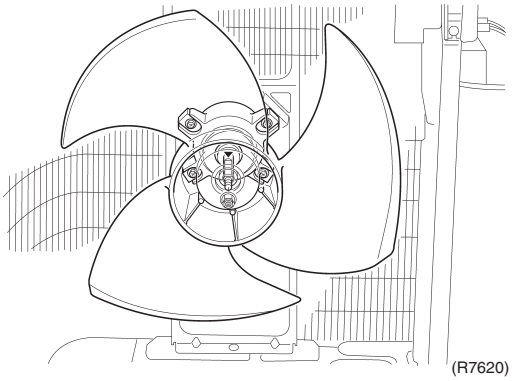 (R7620) | ■ When reassembling, align ▼ mark of the propeller fan with D-cut section of the motor shaft. |
| 2. Removal of the fan motor | | | |
| 1 | Disconnect the connector [S70] for the fan motor from the PCB. | 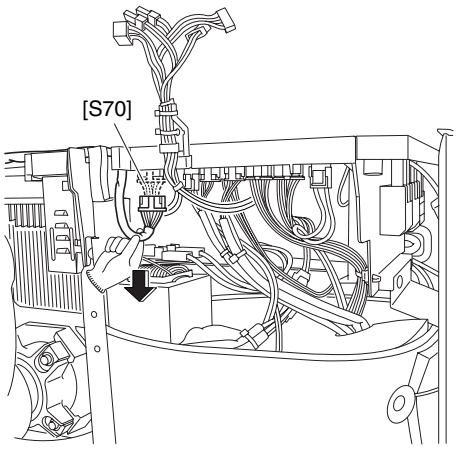 (R9979) | |

| Step | Procedure | | Points |
|---|---|---|---|
| 2 | The figure shows the arrangement of the fan motor lead wire. | 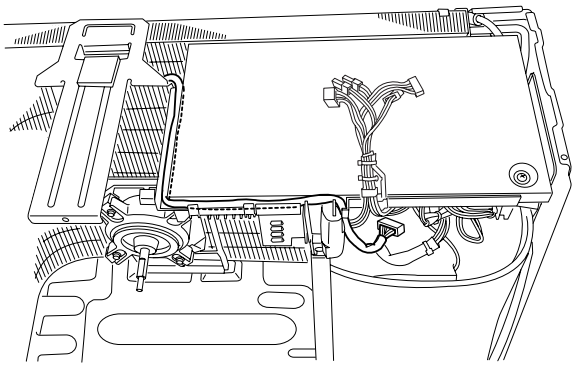 (R9980) | |
| 3 | Remove the 1 screw to remove the fan motor fixing plate. | 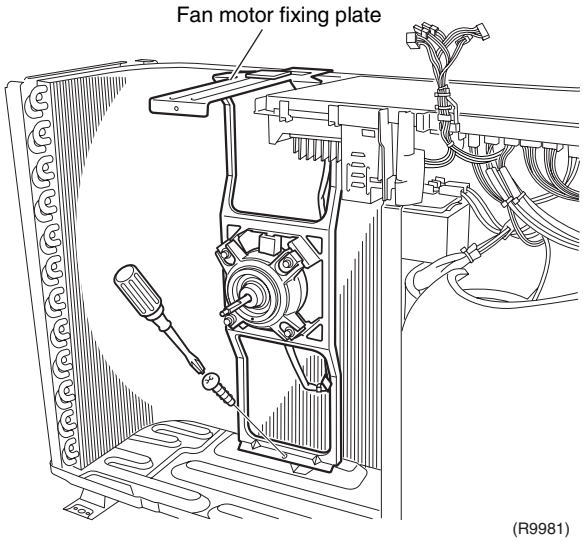  (R9981) | ■ When reassembling, make sure ● mark of the fan motor goes down. |
| | | 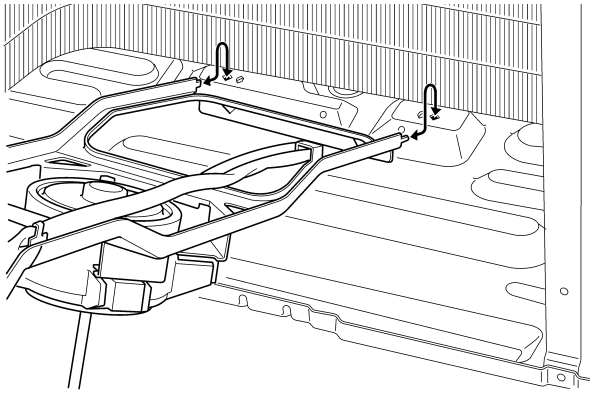 (R7624) | ■ When reassembling, fit the 2 lower hooks into the bottom frame. |
| 4 | Remove out the fan motor fixing plate toward yourself. | 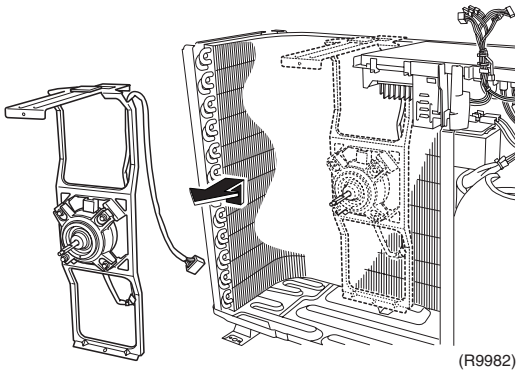 (R9982) | |

| Step | Procedure | | Points |
|---|---|---|---|
| 5 | Turn the fan motor fixing plate backward and undo the 2 fixing hooks of the lead wire. | 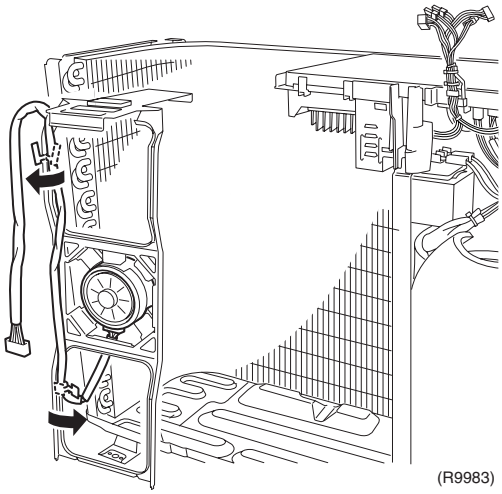 (R9983) | |
| 6 | Release the fan motor lead wire. | 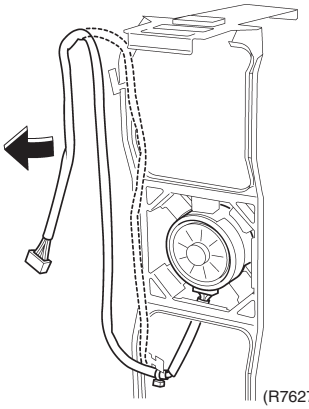 (R7627) | ■ When reassembling, put the lead wire through the back of the motor (so as not to be entangled with the propeller fan). 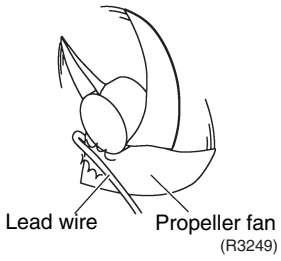  (R3249) |
| 7 | Remove the 4 screws and 4 rubber vibration isolators to remove the fun motor. | 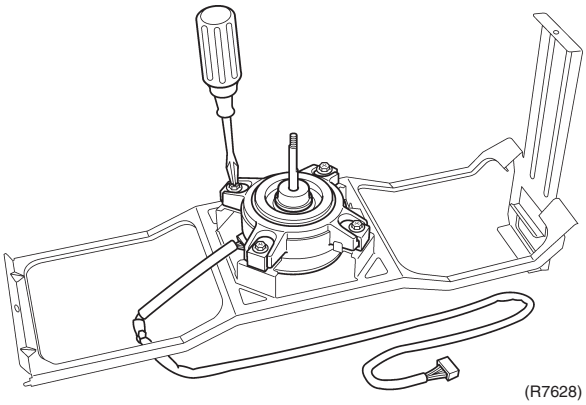 (R7628) 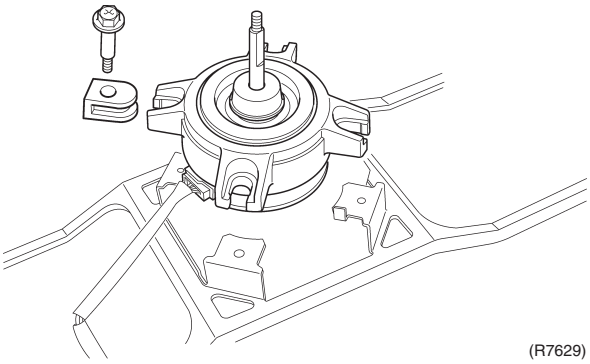 (R7629) | |

# 2.12 Removal of Thermistors

**Procedure**

**Warning** **Be sure to wait 10 minutes or more after turning off all power supplies before disassembling work.**

| Step | Procedure | | Points |
|---|---|---|---|
| 1. Removal of the assembly of thermistor | | | |
| 1 | Undo the clip and remove the discharge pipe thermistor. | 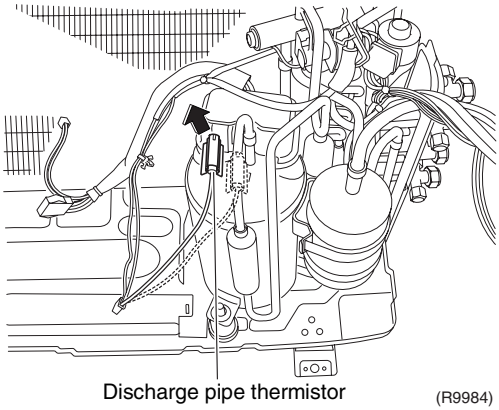 | ■ Be careful not to lose the clip for the discharge pipe thermistor.<br> 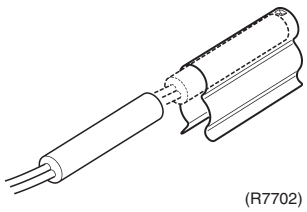 |
| 2 | Cut off the clamp to pull out the heat exchanger thermistor. | 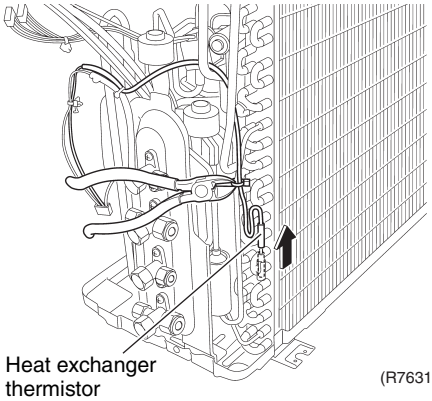 | ■ The clamp is always reserved.<br>■ Be careful not to lose the clips for each thermistor. |
| 3 | The outdoor air / discharge pipe / heat exchanger thermistors are united as one assembly. | 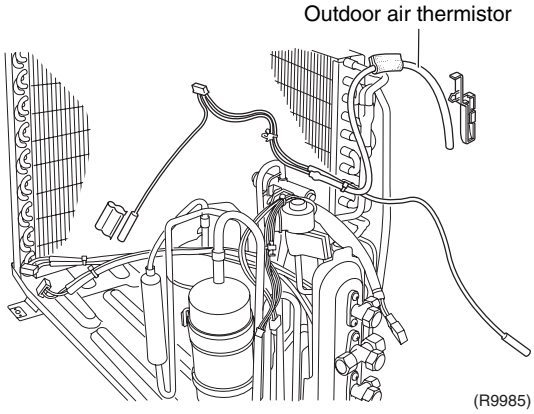 | |
| 4 | The figure shows the arrangement of the assembly of thermistor [S90]. | | |
| 2. Removal of the liquid / gas pipe thermistors | | | |
| 1 | Remove the liquid / gas pipe thermistors. | 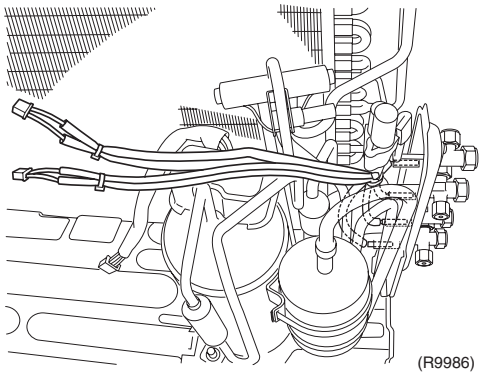 | |

| Step | Procedure | | Points |
|---|---|---|---|
| 2 | Cut off the clamp. | 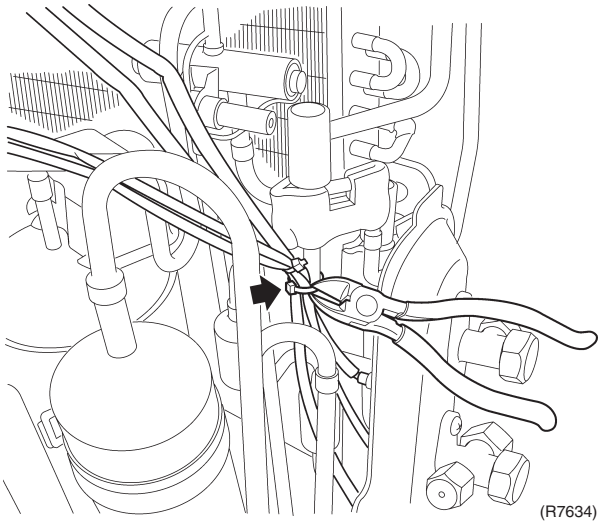 (R7634) | |
| 3 | Open the putty and remove the each thermistor.<br>[S91] : Gas pipe thermistor<br>Room A (Black)<br>Room B (Gray)<br>[S92] : Liquid pipe thermistor<br>Room A (Black)<br>Room B (Gray) | 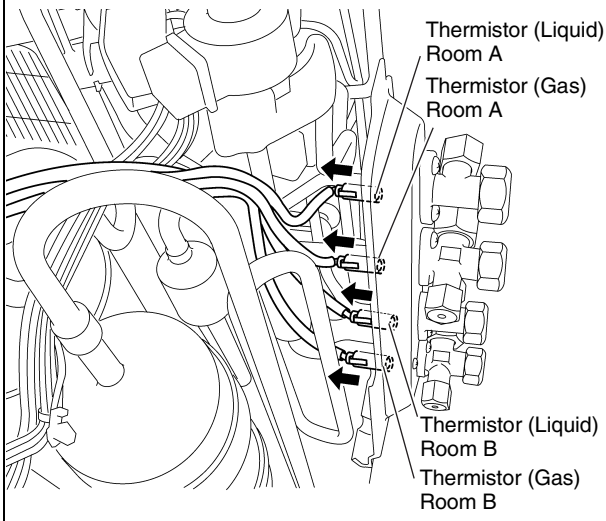 (R7635) | |
| 4 | The figure shows the arrangement of the assembly of the liquid / gas thermistors. | 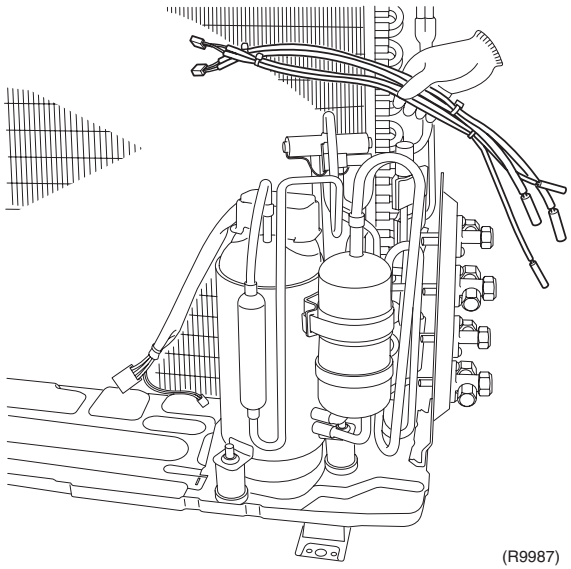 (R9987) | ■ When reassembling, meet the edge of the thermistor and the clip. |

# 2.13 Removal of Compressor

**Procedure**

**Warning** **Be sure to wait 10 minutes or more after turning off all power supplies before disassembling work.**

| Step | Procedure | | Points |
|---|---|---|---|
| 1 | Remove the terminal cover. | 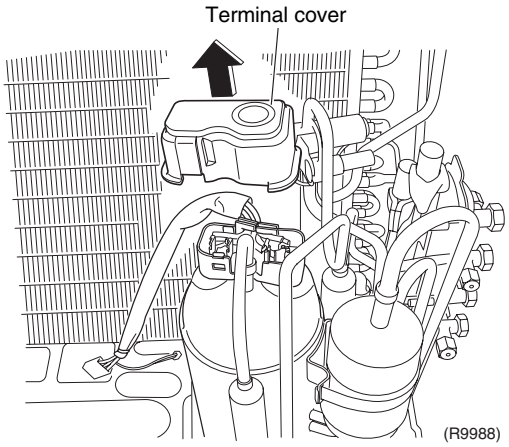 | ■ Be careful so as not to burn the compressor terminals or the name plate. |
| 2 | Disconnect the flag-shaped terminals. | 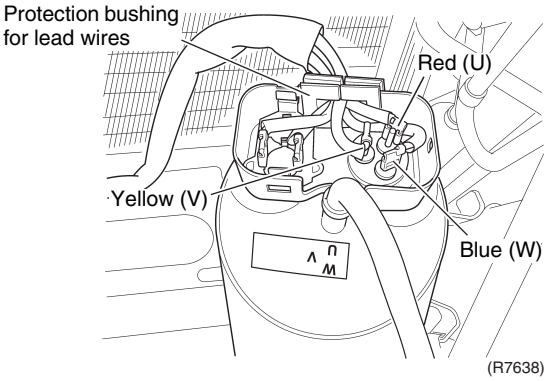 | |
| 3 | Detach the terminals by long nose pliers. Undo the hooks by a flat screwdriver to remove the overload protector. | 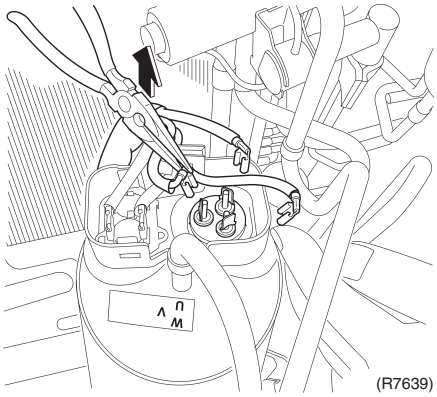 | |
| 4 | Detach the overload protector. | 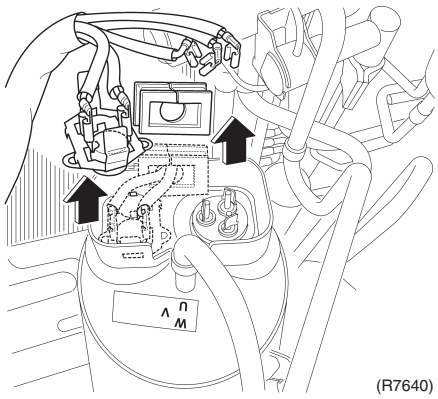 | |

| Step | Procedure | | Points |
|---|---|---|---|
| 5 | Remove the 2 nuts with an open-end spanner. | 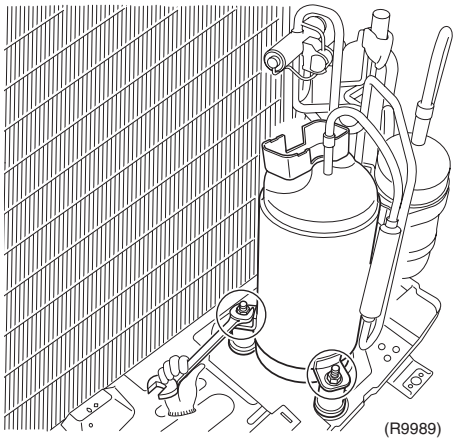 (R9989) | **Warning**<br>**Since it may happen that refrigerant oil in the compressor catches fire, prepare wet cloth so as to extinguish fire immediately.**<br><br>**Warning**<br>**Ventilate when refrigerant leaks during the work.**<br>**(If refrigerant contacts fire, it causes to arise toxic gas.)**<br><br>**Warning**<br>**Be careful about the four way valve, pipes and so on, which were heated up by a gas brazing machine, so as not to get burnt your hands.**<br><br>**Caution**<br>**From the viewpoint of global environment protection, do not discharge the refrigerant gas in the atmosphere. Make sure to recover the refrigerant gas with the recovery system.** |
| | ■ Before working, make sure that the refrigerant is empty in the circuit.<br>■ Be sure to apply nitrogen replacement when heating up the brazed part. | 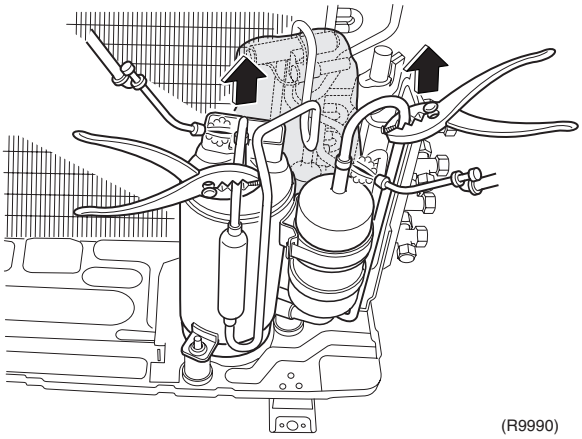 (R9990) | |
| 6 | Heat up the brazed part of the discharge side and disconnect. | | |
| 7 | Heat up the brazed part of the suction side and disconnect. | | |
| 8 | Lift the compressor up to remove. | 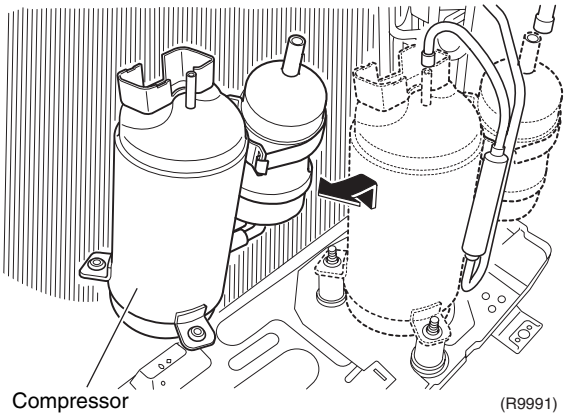  (R9991) | |

# 2.14 Removal of the Four Way Valve / Electronic Expansion Valve

**Procedure**

**Warning** **Be sure to wait 10 minutes or more after turning off all power supplies before disassembling work.**

| Step | Procedure | | Points |
|---|---|---|---|
| 1. Removal of the peripheries | | | ■ Remove the sound blanket beforehand. |
| | Remove:<br>• Terminal cover of compressor<br>• Four way valve coil<br>• Electronic expansion valve coil<br>not to burn them by a gas brazing machine. | 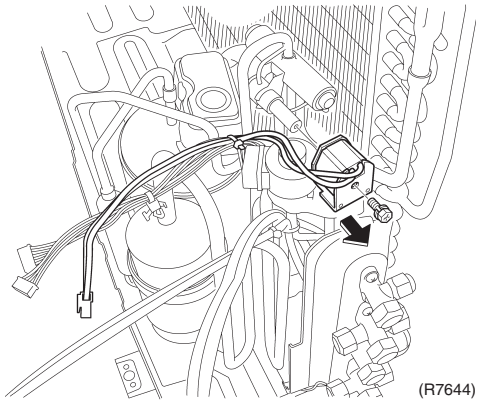 <br>(R7644) | **Warning**<br>**Be careful about the four way valve, pipes and so on, which were heated up by a gas brazing machine, so as not to get burnt your hands.**<br>**Caution**<br>**From the viewpoint of global environment protection, do not discharge the refrigerant gas in the atmosphere. Make sure to recover the refrigerant gas with the recovery system.** |
| 1 | Lift up the electronic expansion valve coils to remove it. | 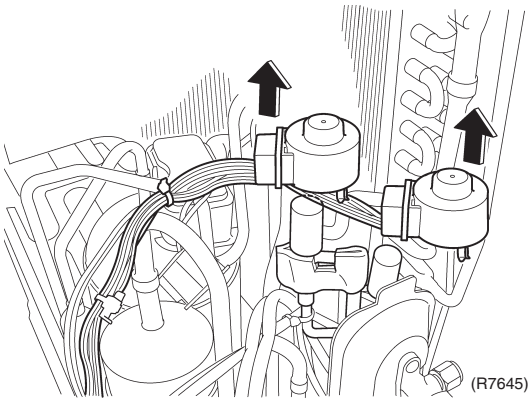 <br>(R7645) | 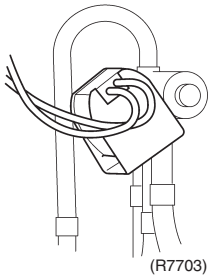 <br>(R7703) |
| 2 | Remove the putty. | 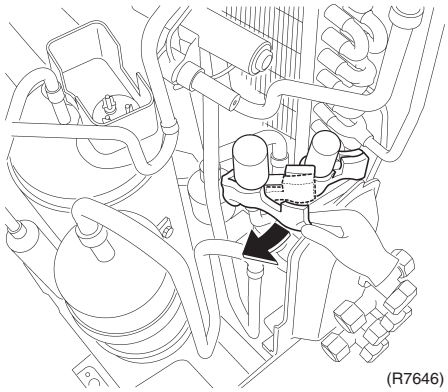 <br>(R7646) | ■ Detach the four way valve coil and the 2 clamps, and then detach the wire harnesses. |
| 3 | Heat up the 2 brazed parts of the electronic expansion valve and remove it. | 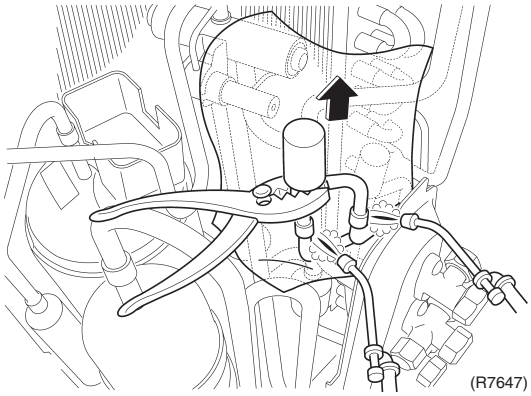 <br>(R7647) | |

| Step | Procedure | | Points |
|---|---|---|---|
| ■ Before working, make sure that the refrigerant is empty in the circuit.<br>■ Be sure to apply nitrogen replacement when heating up the brazed part. | | | **Reassembling precautions**<br>1. Use non-oxidizing brazing method. If nitrogen gas is not available, braze the parts speedily.<br>2. Avoid deterioration of the gaskets due to carbonization of oil inside the four way valve or thermal influence. For this purpose, wrap the four way valve with wet cloth. Splash water over the cloth against becoming too hot (keep it below 120°C). |
| 4 | Provide a protective sheet or a steel plate so that the brazing flame cannot influence peripheries around the four way valve.<br>**Warning**<br>**Since it may happen that refrigerant oil in the compressor catches fire, prepare wet cloth so as to extinguish fire immediately.**<br>**Warning**<br>**Ventilate when refrigerant leaks during the work. (If refrigerant contacts fire, it causes to arise toxic gas.)**<br>**Warning**<br>**Be careful about the four way valve, pipes and so on, which were heated up by a gas brazing machine, so as not to get burnt your hands.** | 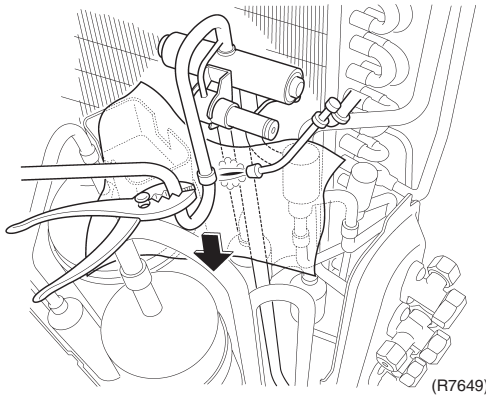 <br>(R7649) | ■ In pulling the pipes, be careful not to over-tighten them with pliers. The pipes may get deformed.<br><br>**In case of the difficulty with a gas brazing machine**<br>1. Disconnect the brazed part where is easy to disconnect and restore.<br>2. Cut pipes on the main unit by a miniature copper tube cutter in order to make it easy to disconnect.<br>**Note:** Do not use a metal saw for cutting pipes by all means because the sawdust come into the circuit. |
| 5 | Pull out the brazed part with pliers and disconnect. | 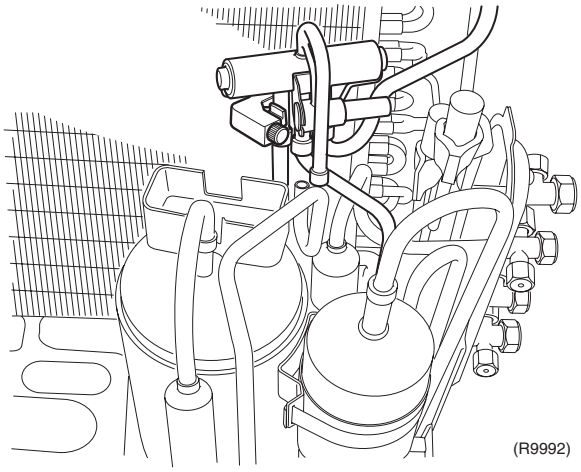 <br>(R9992)<br> 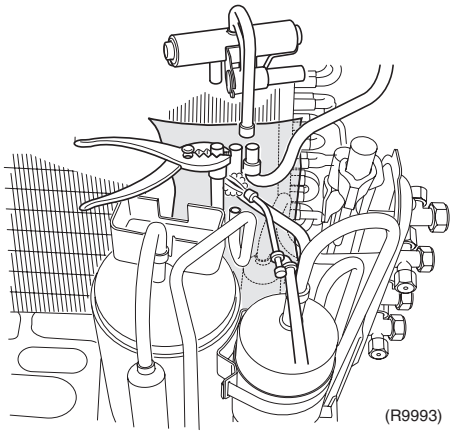 <br>(R9993) | ■ The brazed parts are heated after being disconnected. To avoid a burn, make sure that the compressor is cooled down before removing. |

# Part 8
# Others

1. Others .....255
1.1 Trial Operation.....255
1.2 Jumper Settings .....256
1.3 Application of Silicon Grease to a Power Transistor and a Diode Bridge.....257

# 1. Others

## 1.1 Trial Operation

### 1.1.1 Trial Operation and Testing

1. Measure the supply voltage and make sure that it falls in the specified range.
2. Trial operation should be carried out in either cooling or heating mode.
3. Carry out the test operation in accordance with the Operation Manual to ensure that all functions and parts, such as louver movement, are working properly.

- The air conditioner requires a small amount of power in its standby mode. If the system is not to be used for some time after installation, shut off the circuit breaker to eliminate unnecessary power consumption.
- If the circuit breaker trips to shut off the power to the air conditioner, the system backs up the operation mode. The system then restarts operation with the previous mode when the circuit breaker is restored.

**For Heat pump**

In cooling mode, select the lowest programmable temperature; in heating mode, select the highest programmable temperature.

- Trial operation may be disabled in either mode depending on the room temperature.
- After trial operation is complete, set the temperature to a normal level. (26°C to 28°C in cooling mode, 20°C to 24°C in heating mode)
- For protection, the system disables restart operation for 3 minutes after it is turned off.

### 1.1.2 Trial operation from Remote Controller

(1) Press the MODE button and select operation mode.
(2) Press the ON/OFF button to turn on the system.
(3) Press the both of TEMP buttons and the MODE button at the same time.
(4) Press the TEMP ▲ or ▼ button and select "7". (TEST mode)
(5) Press the MODE button.
(6) Trial operation mode terminates in approx. 30 minutes and switches into normal mode. To quit a trial operation, press ON/OFF button.

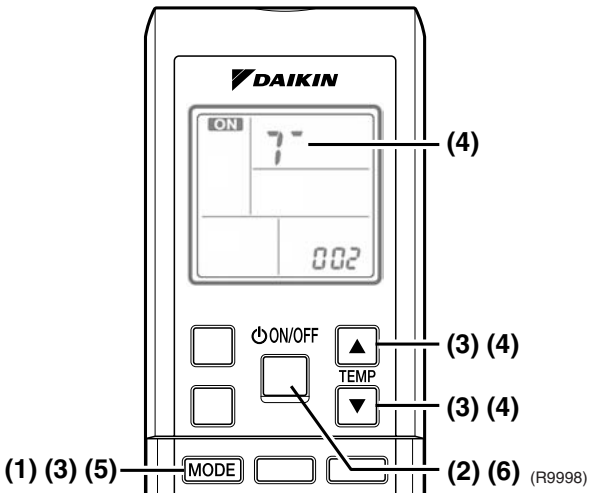

# 1.2 Jumper Settings

## 1.2.1 When 2 Units are Installed in 1 Room

When 2 indoor units are installed in 1 room, one of the 2 wireless remote controllers can be set for different address.

**How to set the different address**

■ Control PCB of the indoor unit

(1) Remove the shield plate of the electrical box.
(Refer to the removal procedure on page 194)

(2) Cut the address jumper JA on the control PCB.

■ Wireless remote controller

(1) Slide the front cover and take it off.

(2) Cut the address jumper J4.

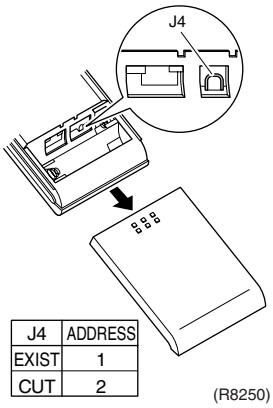


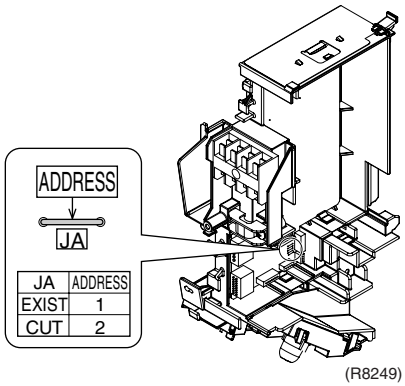


## 1.2.2 Jumper Setting

| Jumper (On indoor unit PCB) | Function | When connected (factory set) | When cut |
|---|---|---|---|
| JC | Power failure recovery function | Auto-restart | Unit does not resume operation after recovering from a power failure. Timer ON-OFF settings are cleared. |
| JB | Fan speed setting when compressor is OFF on thermostat. (effective only at cooling operation) | Fan speed setting ; Remote controller setting | Fan rpm is set to “0” <Fan stop> |

# 1.3 Application of Silicon Grease to a Power Transistor and a Diode Bridge

**Applicable Models**

All outdoor units using inverter type compressor for room air conditioner.

When the printed circuit board of an outdoor unit is replaced, it is required that silicon grease (*1) is certainly applied to the heat radiation part (the contact point to the heat radiation fin) of the power transistor and diode bridge.

*1: Parts number of the silicon grease – 1172698 (Drawing number 3FB03758-1)

**Details**

The silicon grease is an essential article for encouraging the heat radiation of the power transistor and the diode bridge. Applying the paste should be implemented in accordance with the following instruction.

Remark: There is the possibility of failure with smoke in case of bad heat radiation.

- To completely wipe off the old silicon grease on a heat radiation fin.
- To evenly apply the silicon grease to the whole.
- Do not have any foreign object such as solder or paper waste between the power transistor, the diode bridge and the heat radiation fin.
- To firmly tighten the screws of the power transistor and the diode bridge, and to surely contact to the heat radiation fin without any gap.

**<Example>**

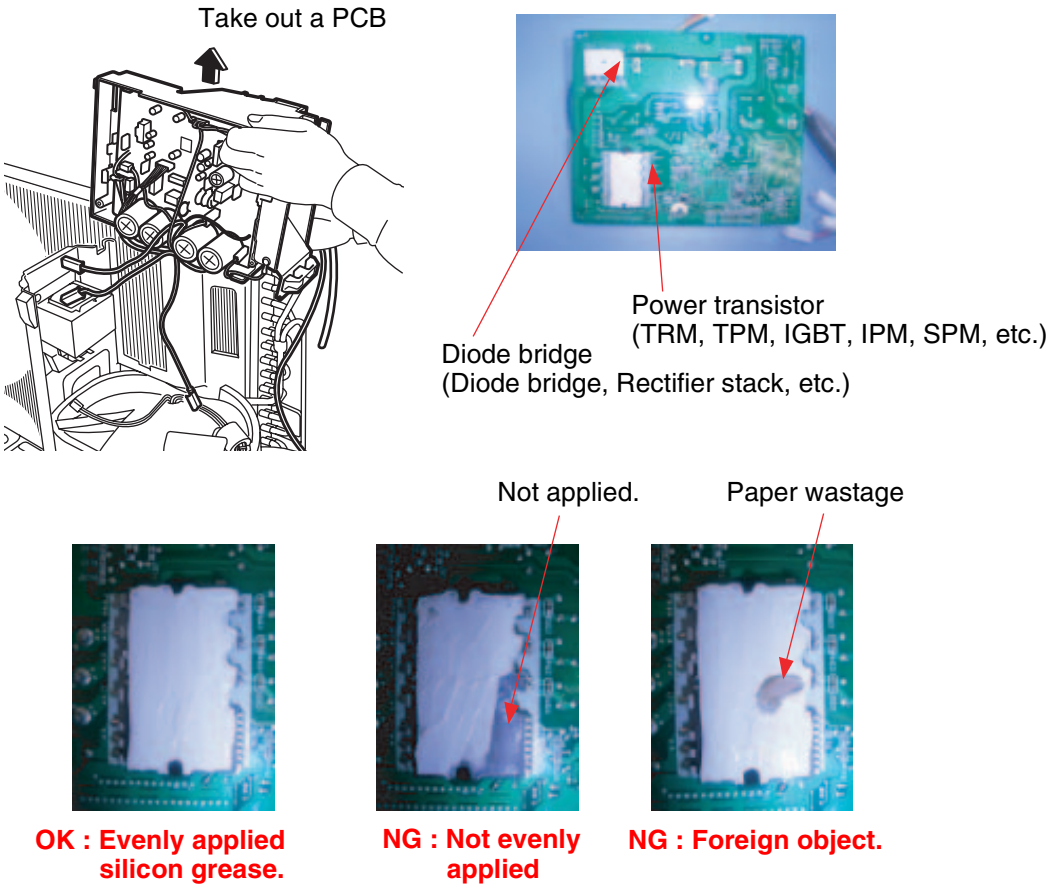


(R9056)

# Part 9
# Appendix

1. Piping Diagrams ..... 259
   1.1 Indoor Units ..... 259
   1.2 Outdoor Units ..... 260
2. Wiring Diagrams ..... 261
   2.1 Indoor Units ..... 261
   2.2 Outdoor Units ..... 262

# 1. Piping Diagrams

## 1.1 Indoor Units

**CTXU25/35/42G2V1B**

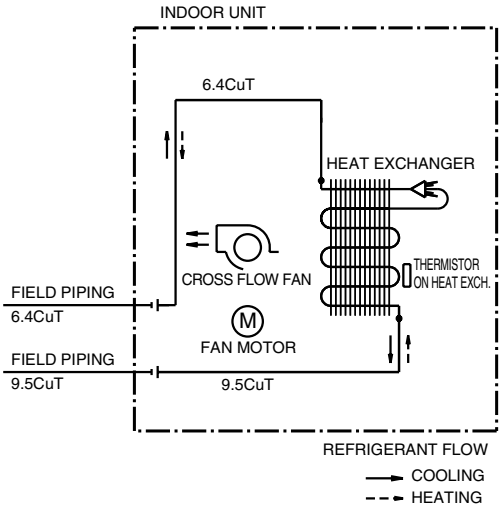


4D058897A

**CTXU50G2V1B**

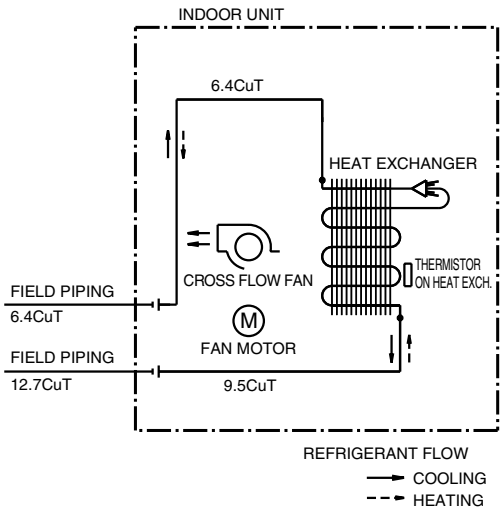


4D058898A

# 1.2 Outdoor Units

## 2MXU40GV1B

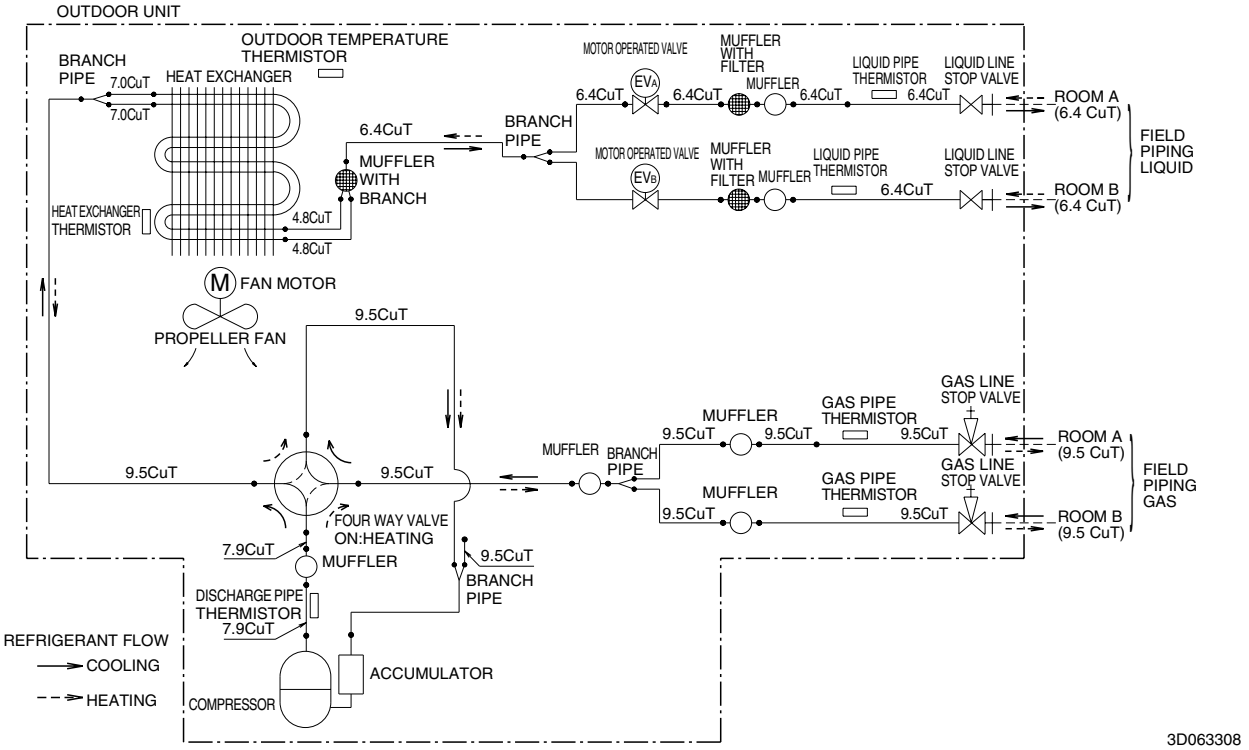


## 2MXU50GV1B

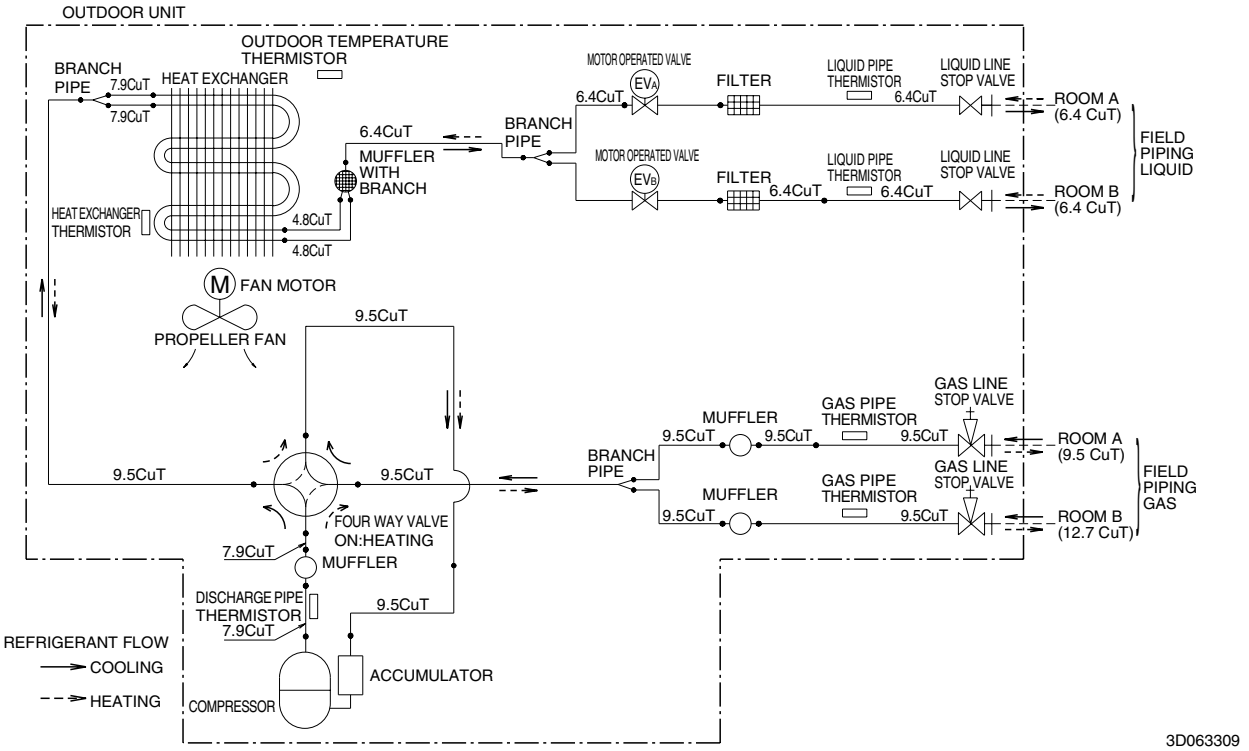

# 2. Wiring Diagrams

## 2.1 Indoor Units

### CTXU25/35/42/50G2V1B

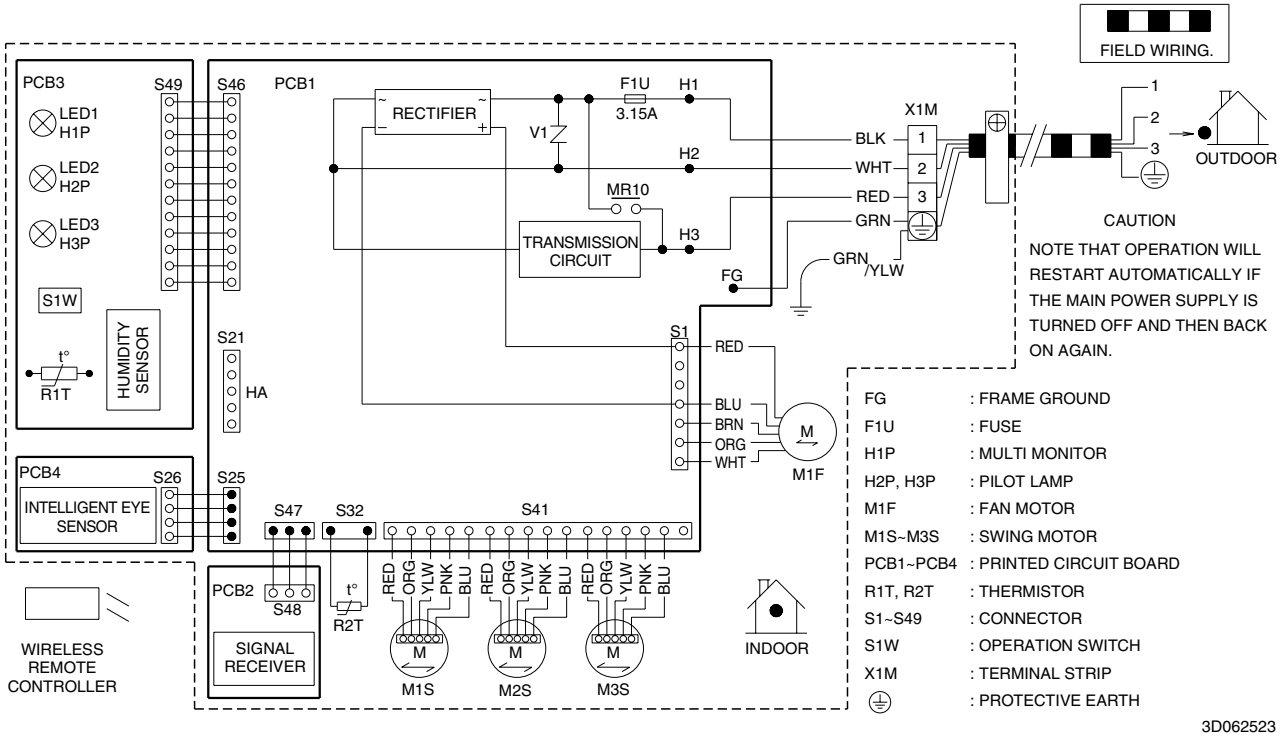

# 2.2 Outdoor Units

## 2MXU40GV1B

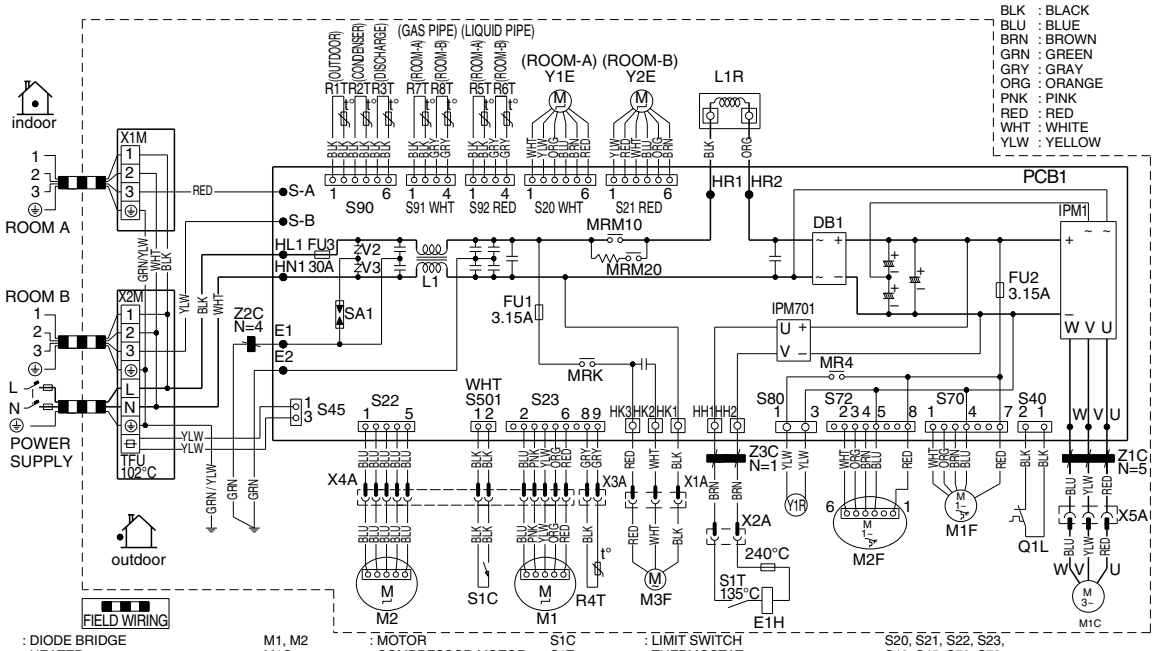


| | | | | | | | |
|---|---|---|---|---|---|---|---|
| DB1 | : DIODE BRIDGE | M1, M2 | : MOTOR | S1C | : LIMIT SWITCH | S20, S21, S22, S23, | |
| E1H | : HEATER | M1C | : COMPRESSOR MOTOR | S1T | : THERMOSTAT | S40, S45, S70, S72, | |
| FU1, FU2, FU3: FUSE | | M1F, M2F, M3F | : FAN MOTOR | SA1 | : SURGE ARRESTER | S80, S90, S91, S92, | |
| HH1, HH2 | | MRM10, MRM20 | | TFU | : THERMAL FUSE | S501, X1A~X5A | : CONNECTOR |
| HK1, HK2, HK3: CONNECTOR | | MRK, MR4 | : MAGNETIC RELAY | V2, V3 | : VARISTOR | ⏚ | : PROTECTIVE EARTH |
| IPM1, IPM701 | : INTELLIGENT POWER MODULE | N | : NEUTRAL | X1M, X2M | : TERMINAL STRIP | | |
| L | : LIVE | PCB1 | : PRINTED CIRCUIT BOARD | Y1E, Y2E | : ELECTRONIC EXPANSION VALVE COIL | | |
| L1 | : COIL | Q1L | : OVERLOAD PROTECTOR | Y1R | : REVERSING SOLENOID VALVE COIL | | |
| L1R | : REACTOR | R1T~R8T | : THERMISTOR | Z1C,Z2C, Z3C | : FERRITE CORE | | |

3D062342A

## 2MXU50GV1B

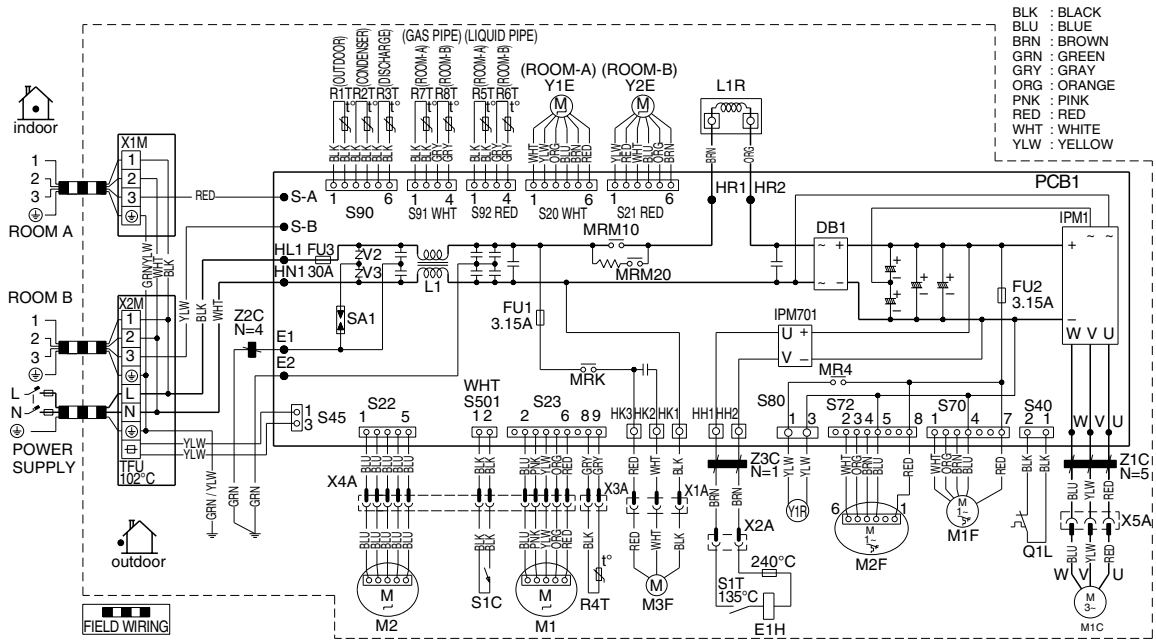


| | | | | | | | |
|---|---|---|---|---|---|---|---|
| DB1 | : DIODE BRIDGE | M1, M2 | : MOTOR | S1C | : LIMIT SWITCH | S20, S21, S22, S23, | |
| E1H | : HEATER | M1C | : COMPRESSOR MOTOR | S1T | : THERMOSTAT | S40, S45, S70, S72, | |
| FU1, FU2, FU3: FUSE | | M1F, M2F, M3F | : FAN MOTOR | SA1 | : SURGE ARRESTER | S80, S90, S91, S92, | |
| HH1, HH2 | | MRM10, MRM20 | | TFU | : THERMAL FUSE | S501, X1A~X5A | : CONNECTOR |
| HK1, HK2, HK3: CONNECTOR | | MRK, MR4 | : MAGNETIC RELAY | V2, V3 | : VARISTOR | ⏚ | : PROTECTIVE EARTH |
| IPM1, IPM701 | : INTELLIGENT POWER MODULE | N | : NEUTRAL | X1M, X2M | : TERMINAL STRIP | | |
| L | : LIVE | PCB1 | : PRINTED CIRCUIT BOARD | Y1E, Y2E | : ELECTRONIC EXPANSION VALVE COIL | | |
| L1 | : COIL | Q1L | : OVERLOAD PROTECTOR | Y1R | : REVERSING SOLENOID VALVE COIL | | |
| L1R | : REACTOR | R1T~R8T | : THERMISTOR | Z1C,Z2C, Z3C | : FERRITE CORE | | |

3D062655A

**Warning**

- Daikin Industries, Ltd.'s products are manufactured for export to numerous countries throughout the world. Daikin Industries, Ltd. does not have control over which products are exported to and used in a particular country. Prior to purchase, please therefore confirm with your local authorised importer, distributor and/or retailer whether this product conforms to the applicable standards, and is suitable for use, in the region where the product will be used. This statement does not purport to exclude, restrict or modify the application of any local legislation.
- Ask a qualified installer or contractor to install this product. Do not try to install the product yourself. Improper installation can result in water or refrigerant leakage, electrical shock, fire or explosion.
- Use only those parts and accessories supplied or specified by Daikin. Ask a qualified installer or contractor to install those parts and accessories. Use of unauthorised parts and accessories or improper installation of parts and accessories can result in water or refrigerant leakage, electrical shock, fire or explosion.
- Read the User's Manual carefully before using this product. The User's Manual provides important safety instructions and warnings. Be sure to follow these instructions and warnings.

If you have any enquiries, please contact your local importer, distributor and/or retailer.

## Cautions on product corrosion

1. Air conditioners should not be installed in areas where corrosive gases, such as acid gas or alkaline gas, are produced.
2. If the outdoor unit is to be installed close to the sea shore, direct exposure to the sea breeze should be avoided. If you need to install the outdoor unit close to the sea shore, contact your local distributor.

JMI-0107

Organization:
DAIKIN INDUSTRIES, LTD.
AIR CONDITIONING MANUFACTURING DIVISION

Scope of Registration:
THE DESIGN/DEVELOPMENT AND MANUFACTURE OF COMMERCIAL AIR CONDITIONING, HEATING, COOLING, REFRIGERATING EQUIPMENT, COMMERCIAL HEATING EQUIPMENT, RESIDENTIAL AIR CONDITIONING EQUIPMENT, HEAT RECLAIM VENTILATION, AIR CLEANING EQUIPMENT, MARINE TYPE CONTAINER REFRIGERATION UNITS, COMPRESSORS AND VALVES.

JQA-1452

Organization:
DAIKIN INDUSTRIES (THAILAND) LTD.

Scope of Registration:
THE DESIGN/DEVELOPMENT AND MANUFACTURE OF AIR CONDITIONERS AND THE COMPONENTS INCLUDING COMPRESSORS USED FOR THEM

EC99J2044

All of the Daikin Group's business facilities and subsidiaries in Japan are certified under the ISO 14001 international standard for environment management.

**Dealer**

**DAIKIN INDUSTRIES, LTD.**
Head Office:
Umeda Center Bldg., 2-4-12, Nakazaki-Nishi, Kita-ku, Osaka, 530-8323 Japan

Tokyo Office:
JR Shinagawa East Bldg., 2-18-1, Konan, Minato-ku, Tokyo, 108-0075 Japan

http://www.daikin.com/global_ac/

©All rights reserved

●Specifications, designs and other content appearing in this brochure are current as of June 2009 but subject to change without notice.

SiBE12-908
Printed in Japan 06/2009 B AK