DAIKIN

SiBE041102_A

Service Manual

Inverter Pair
Wall Mounted Type K-Series

[Applied Models]
● Inverter Pair : Heat Pump

Inverter Pair
Wall Mounted Type
K-Series

●Heat Pump

Indoor Unit
FTXN25KEV1B
FTXN35KEV1B

Outdoor Unit
RXN25KEV1B
RXN35KEV1B

1. Introduction v
1.1 Safety Cautions v
1.2 Used Icons ix

Part 1 List of Functions 1

1. Functions 2

Part 2 Specifications 3

1. Specifications 4

Part 3 Printed Circuit Board Connector Wiring Diagram 5

1. Indoor Unit 6
2. Outdoor Unit 8

Part 4 Function and Control 9

1. Main Functions 10
1.1 Temperature Control 10
1.2 Frequency Principle 10
1.3 Airflow Direction Control 12
1.4 Fan Speed Control for Indoor Unit 13
1.5 Program Dry Operation 14
1.6 Automatic Operation 15
1.7 Thermostat Control 16
1.8 NIGHT SET Mode 17
1.9 ECONO Operation 18
1.10 Inverter POWERFUL Operation 19
1.11 Other Functions 20
2. Function of Thermistor 21
3. Control Specification 22
3.1 Mode Hierarchy 22
3.2 Frequency Control 23
3.3 Controls at Mode Changing / Start-up 25
3.4 Discharge Pipe Temperature Control 26
3.5 Input Current Control 27
3.6 Freeze-up Protection Control 28
3.7 Heating Peak-cut Control 28
3.8 Outdoor Fan Control 29
3.9 Liquid Compression Protection Function 29
3.10 Defrost Control 30
3.11 Electronic Expansion Valve Control 31
3.12 Malfunctions 34

Part 5 Operation Manual 35

1. System Configuration 36
2. Operation Manual 37
2.1 Remote Controller 37
2.2 AUTO · DRY · COOL · HEAT · FAN Operation 38
2.3 Adjusting the Airflow Direction 40

2.4 COMFORT AIRFLOW Operation 42
2.5 POWERFUL Operation 43
2.6 ECONO Operation 44
2.7 OFF TIMER Operation 45
2.8 ON TIMER Operation 46

Part 6 Service Diagnosis 47

1. Troubleshooting with LED 48
   1.1 Indoor Unit 48
   1.2 Outdoor Unit 48
2. Problem Symptoms and Measures 49
3. Service Check Function 50
4. Troubleshooting 53
   4.1 Error Codes and Description 53
   4.2 Indoor Unit PCB Abnormality 54
   4.3 Freeze-up Protection Control or Heating Peak-cut Control 55
   4.4 Fan Motor (AC Motor) or Related Abnormality 57
   4.5 Thermistor or Related Abnormality (Indoor Unit) 59
   4.6 Signal Transmission Error (between Indoor Unit and Outdoor Unit) 60
   4.7 Unspecified Voltage (between Indoor Unit and Outdoor Unit) 62
   4.8 Outdoor Unit PCB Abnormality 63
   4.9 OL Activation (Compressor Overload) 64
   4.10 Compressor Lock 65
   4.11 Input Overcurrent Detection 66
   4.12 Four Way Valve Abnormality 67
   4.13 Discharge Pipe Temperature Control 69
   4.14 High Pressure Control in Cooling 70
   4.15 Compressor System Sensor Abnormality 71
   4.16 Position Sensor Abnormality 72
   4.17 DC Voltage / Current Sensor Abnormality 74
   4.18 Thermistor or Related Abnormality (Outdoor Unit) 75
   4.19 Electrical Box Temperature Rise 77
   4.20 Radiation Fin Temperature Rise 79
   4.21 Output Overcurrent Detection 81
   4.22 Refrigerant Shortage 83
   4.23 Low-voltage Detection or Over-voltage Detection 85
5. Check 87
   5.1 Thermistor Resistance Check 87
   5.2 Hall IC Check 88
   5.3 Power Supply Waveforms Check 88
   5.4 Electronic Expansion Valve Check 89
   5.5 Four Way Valve Performance Check 90
   5.6 Inverter Unit Refrigerant System Check 90
   5.7 “Inverter Checker” Check 91
   5.8 Installation Condition Check 92
   5.9 Discharge Pressure Check 93
   5.10 Outdoor Fan System Check 93
   5.11 Main Circuit Short Check 94
   5.12 Power Module Check 94

Part 7 Removal Procedure 95

1. Indoor Unit 96
   1.1 Removal of Air Filters 96
   1.2 Removal of Horizontal Blade 98
   1.3 Removal of Front Panel 100
   1.4 Removal of Front Grille 101
   1.5 Removal of Electrical Box / Vertical Blades 102
   1.6 Removal of Swing Motor / PCBs 107
   1.7 Removal of Indoor Heat Exchanger 111
   1.8 Removal of Fan Rotor / Fan Motor 114
   1.9 Exchange of Drain Hose (Piping Direction) 117
2. Outdoor Unit 118
   2.1 Removal of Outer Panels 118
   2.2 Removal of Outdoor Fan / Fan Motor 120
   2.3 Removal of Electrical Box / PCB 122
   2.4 Removal of Sound Blankets 130
   2.5 Removal of Four Way Valve 132
   2.6 Removal of Compressor 135

Part 8 Trial Operation and Field Settings 136

1. Pump Down Operation 137
2. Forced Cooling Operation 138
3. Trial Operation 139
4. Field Settings 140
   4.1 When 2 Units are Installed in 1 Room 140
   4.2 Jumper Settings 140
5. Application of Silicon Grease to a Power Transistor and a Diode Bridge 141

Part 9 Appendix 142

1. Piping Diagrams 143
   1.1 Indoor Unit 143
   1.2 Outdoor Unit 144
2. Wiring Diagrams 145
   2.1 Indoor Unit 145
   2.2 Outdoor Unit 146

1. Introduction

1.1 Safety Cautions

Cautions and Warnings

- Be sure to read the following safety cautions before conducting repair work.
- The caution items are classified into "⚠ **Warning**" and "⚠ **Caution**". The "⚠ **Warning**" items are especially important since they can lead to death or serious injury if they are not followed closely. The "⚠ **Caution**" items can also lead to serious accidents under some conditions if they are not followed. Therefore, be sure to observe all the safety caution items described below.
- About the pictograms

△ This symbol indicates the item for which caution must be exercised.
The pictogram shows the item to which attention must be paid.

◯ This symbol indicates the prohibited action.
The prohibited item or action is shown in the illustration or near the symbol.

● This symbol indicates the action that must be taken, or the instruction.
The instruction is shown in the illustration or near the symbol.

- After the repair work is complete, be sure to conduct a test operation to ensure that the equipment operates normally, and explain the cautions for operating the product to the customer.

1.1.1 Cautions Regarding Safety of Workers

⚠ **Warning**	
Be sure to disconnect the power cable plug from the plug socket before disassembling the equipment for repair. Working on the equipment that is connected to the power supply may cause an electrical shock. If it is necessary to supply power to the equipment to conduct the repair or inspecting the circuits, do not touch any electrically charged sections of the equipment.	
If the refrigerant gas is discharged during the repair work, do not touch the discharged refrigerant gas. The refrigerant gas may cause frostbite.	
When disconnecting the suction or discharge pipe of the compressor at the welded section, evacuate the refrigerant gas completely at a well-ventilated place first. If there is gas remaining inside the compressor, the refrigerant gas or refrigerating machine oil discharges when the pipe is disconnected, and it may cause injury.	
If the refrigerant gas leaks during the repair work, ventilate the area. The refrigerant gas may generate toxic gases when it contacts flames.	
The step-up capacitor supplies high-voltage electricity to the electrical components of the outdoor unit. Be sure to discharge the capacitor completely before conducting repair work. A charged capacitor may cause an electrical shock.	
Do not start or stop the air conditioner operation by plugging or unplugging the power cable plug. Plugging or unplugging the power cable plug to operate the equipment may cause an electrical shock or fire.	

Warning	
Be sure to wear a safety helmet, gloves, and a safety belt when working at a high place (more than 2 m). Insufficient safety measures may cause a fall accident.	
In case of R-410A refrigerant models, be sure to use pipes, flare nuts and tools for the exclusive use of the R-410A refrigerant. The use of materials for R-22 refrigerant models may cause a serious accident such as a damage of refrigerant cycle as well as an equipment failure.	

Caution	
Do not repair the electrical components with wet hands. Working on the equipment with wet hands may cause an electrical shock.	
Do not clean the air conditioner by splashing water. Washing the unit with water may cause an electrical shock.	
Be sure to provide the grounding when repairing the equipment in a humid or wet place, to avoid electrical shocks.	
Be sure to turn off the power switch and unplug the power cable when cleaning the equipment. The internal fan rotates at a high speed, and may cause injury.	
Be sure to conduct repair work with appropriate tools. The use of inappropriate tools may cause injury.	
Be sure to check that the refrigerating cycle section has cooled down enough before conducting repair work. Working on the unit when the refrigerating cycle section is hot may cause burns.	
Use the welder in a well-ventilated place. Using the welder in an enclosed room may cause oxygen deficiency.	

1.1.2 Cautions Regarding Safety of Users

Warning	
Be sure to use parts listed in the service parts list of the applicable model and appropriate tools to conduct repair work. Never attempt to modify the equipment. The use of inappropriate parts or tools may cause an electrical shock, excessive heat generation or fire.	
If the power cable and lead wires have scratches or deteriorated, be sure to replace them. Damaged cable and wires may cause an electrical shock, excessive heat generation or fire.	
Do not use a joined power cable or extension cable, or share the same power outlet with other electrical appliances, since it may cause an electrical shock, excessive heat generation or fire.	
Be sure to use an exclusive power circuit for the equipment, and follow the local technical standards related to the electrical equipment, the internal wiring regulations, and the instruction manual for installation when conducting electrical work. Insufficient power circuit capacity and improper electrical work may cause an electrical shock or fire.	
Be sure to use the specified cable for wiring between the indoor and outdoor units. Make the connections securely and route the cable properly so that there is no force pulling the cable at the connection terminals. Improper connections may cause excessive heat generation or fire.	
When wiring between the indoor and outdoor units, make sure that the terminal cover does not lift off or dismount because of the cable. If the cover is not mounted properly, the terminal connection section may cause an electrical shock, excessive heat generation or fire.	
Do not damage or modify the power cable. Damaged or modified power cable may cause an electrical shock or fire. Placing heavy items on the power cable, and heating or pulling the power cable may damage the cable.	
Do not mix air or gas other than the specified refrigerant (R-410A / R-22) in the refrigerant system. If air enters the refrigerating system, an excessively high pressure results, causing equipment damage and injury.	
If the refrigerant gas leaks, be sure to locate the leaking point and repair it before charging the refrigerant. After charging refrigerant, make sure that there is no refrigerant leak. If the leaking point cannot be located and the repair work must be stopped, be sure to perform pump-down and close the service valve, to prevent the refrigerant gas from leaking into the room. The refrigerant gas itself is harmless, but it may generate toxic gases when it contacts flames, such as fan and other heaters, stoves and ranges.	
When relocating the equipment, make sure that the new installation site has sufficient strength to withstand the weight of the equipment. If the installation site does not have sufficient strength and if the installation work is not conducted securely, the equipment may fall and cause injury.	
Check to make sure that the power cable plug is not dirty or loose, then insert the plug into a power outlet securely. If the plug has dust or loose connection, it may cause an electrical shock or fire.	

Warning	
Be sure to install the product correctly by using the provided standard installation frame. Incorrect use of the installation frame and improper installation may cause the equipment to fall, resulting in injury.	For unitary type only
Be sure to install the product securely in the installation frame mounted on the window frame. If the unit is not securely mounted, it may fall and cause injury.	For unitary type only
When replacing the coin battery in the remote controller, be sure to dispose of the old battery to prevent children from swallowing it. If a child swallows the coin battery, see a doctor immediately.	

Caution	
Installation of a leakage breaker is necessary in some cases depending on the conditions of the installation site, to prevent electrical shocks.	
Do not install the equipment in a place where there is a possibility of combustible gas leaks. If the combustible gas leaks and remains around the unit, it may cause a fire.	
Check to see if the parts and wires are mounted and connected properly, and if the connections at the soldered or crimped terminals are secure. Improper installation and connections may cause excessive heat generation, fire or an electrical shock.	
If the installation platform or frame has corroded, replace it. Corroded installation platform or frame may cause the unit to fall, resulting in injury.	
Check the grounding, and repair it if the equipment is not properly grounded. Improper grounding may cause an electrical shock.	
Be sure to measure the insulation resistance after the repair, and make sure that the resistance is 1 MΩ or higher. Faulty insulation may cause an electrical shock.	
Be sure to check the drainage of the indoor unit after the repair. Faulty drainage may cause the water to enter the room and wet the furniture and floor.	

Caution	
Do not tilt the unit when removing it. The water inside the unit may spill and wet the furniture and floor.	
Be sure to install the packing and seal on the installation frame properly. If the packing and seal are not installed properly, water may enter the room and wet the furniture and floor.	For unitary type only

1.2 Used Icons

Icons are used to attract the attention of the reader to specific information. The meaning of each icon is described in the table below:

Icon	Type of Information	Description
Note:	Note	A “note” provides information that is not indispensable, but may nevertheless be valuable to the reader, such as tips and tricks.
Caution	Caution	A “caution” is used when there is danger that the reader, through incorrect manipulation, may damage equipment, loose data, get an unexpected result or has to restart (part of) a procedure.
Warning	Warning	A “warning” is used when there is danger of personal injury.
	Reference	A “reference” guides the reader to other places in this binder or in this manual, where he/she will find additional information on a specific topic.

Part 1
List of Functions

1. Functions.....2

1. Functions

Category	Functions	FTXN25/35KEV1B RXN25/35KEV1B	Category	Functions	FTXN25/35KEV1B RXN25/35KEV1B
Basic Function	Inverter (with Inverter Power Control)	●	Health & Clean	Air-Purifying Filter	—
	Operation Limit for Cooling (°CDB)	10 ~ 46		Photocatalytic Deodorizing Filter	—
	Operation Limit for Heating (°CWB)	−15 ~ 18		Air-Purifying Filter with Photocatalytic Deodorizing Function	—
	PAM Control	●		Titanium Apatite Photocatalytic Air-Purifying Filter	●
	Standby Electricity Saving	●			
Compressor	Oval Scroll Compressor	—		Air Filter (Prefilter)	●
	Swing Compressor	●		Wipe-Clean Flat Panel	●
	Rotary Compressor	—		Washable Grille	—
	Reluctance DC Motor	●		MOLD PROOF Operation	—
Comfortable Airflow	Power-Airflow Flap	●		Heating Dry Operation	—
	Power-Airflow Dual Flaps	—		Good-Sleep Cooling Operation	—
	Power-Airflow Diffuser	—	Timer	24-Hour ON/OFF TIMER	—
				Count Up-Down ON/OFF TIMER	●
	Wide-Angle Louvers	●		NIGHT SET Mode	●
	Vertical Auto-Swing (Up and Down)	●	Worry Free “Reliability & Durability”	Auto-Restart (after Power Failure)	●
	Horizontal Auto-Swing (Right and Left)	—		Self-Diagnosis (Digital, LED) Display	●
	3-D Airflow	—		Wiring Error Check Function	—
	COMFORT AIRFLOW Operation	●		Anti-Corrosion Treatment of Outdoor Heat Exchanger	●
Comfort Control	Auto Fan Speed	●	Flexibility	Multi-Split / Split Type Compatible Indoor Unit	—
	Indoor Unit Quiet Operation	●			
	NIGHT QUIET Mode (Automatic)	—		Flexible Power Supply Correspondence	—
	OUTDOOR UNIT QUIET Operation (Manual)	—			
	INTELLIGENT EYE Operation	—		Chargeless	10 m
	Quick Warming Function (Preheating operation)	●		Either Side Drain (Right or Left)	●
	Hot-Start Function	●		Power Selection	—
	Automatic Defrosting	●	Remote Control	5-Room Centralized Controller (Option)	—
Operation	Automatic Operation	●			
	Program Dry Operation	●		Remote Control Adaptor (Normal Open Pulse Contact) (Option)	—
	Fan Only	●			
Lifestyle Convenience	New POWERFUL Operation (Non-Inverter)	—		Remote Control Adaptor (Normal Open Contact) (Option)	—
	Inverter POWERFUL Operation	●		DIII-NET Compatible (Adaptor) (Option)	—
	Priority-Room Setting	—	Remote Controller	Wireless	●
	COOL / HEAT Mode Lock	—		Wired (Option)	●
	HOME LEAVE Operation	—			
	ECONO Operation	●			
	Indoor Unit ON/OFF Button	●			
	Signal Receiving Sign	●			
	Temperature Display	—			

Note: ● : Holding Functions
— : No Functions

Part 2
Specifications

1. Specifications 4

1. Specifications

50 Hz, 220 - 230 - 240 V

Model	Indoor Unit		FTXN25KEV1B		FTXN35KEV1B	
	Outdoor Unit		RXN25KEV1B		RXN35KEV1B	
			Cooling	Heating	Cooling	Heating
Capacity Rated (Min. ~ Max.)		kW	2.5 (1.3 ~ 2.8)	2.8 (1.3 ~ 3.5)	3.2 (1.3 ~ 3.5)	3.5 (1.3 ~ 3.7)
		Btu/h	8,500 (4,400 ~ 9,600)	9,600 (4,400 ~ 11,900)	10,900 (4,400 - 11,900)	11,900 (4,400 ~ 12,600)
		kcal/h	2,150 (1,120 ~ 2,410)	2,410 (1,120 ~ 3,010)	2,750 (1,120 ~ 3,010)	3,010 (1,120 ~ 3,180)
Moisture Removal		L/h	1.2	—	1.7	—
Running Current (Rated)		A	3.8 - 3.6 - 3.5	3.9 - 3.7 - 3.5	4.9 - 4.7 - 4.5	4.7 - 4.5 - 4.3
Power Consumption Rated (Min. ~ Max.)		W	795 (310 ~ 1,040)	820 (260 ~ 1,030)	1,060 (310 ~ 1,480)	1,020 (260 ~ 1,200)
Power Factor (Rated)		%	95.1 - 96.0 - 94.6	95.6 - 96.4 - 97.6	98.3 - 98.1 - 98.1	98.6 - 98.6 - 98.8
COP Rated (Min. ~ Max.)		W/W	3.13 (4.19 ~ 2.69)	3.41 (5.00 ~ 3.40)	3.02 (4.19 ~ 2.36)	3.43 (5.00 ~ 3.08)
Piping Connections	Liquid	mm	ϕ 6.4		ϕ 6.4	
	Gas	mm	ϕ 9.5		ϕ 9.5	
	Drain	mm	ϕ 16.0		ϕ 16.0	
Heat Insulation			Both Liquid and Gas Pipes		Both Liquid and Gas Pipes	
Max. Interunit Piping Length		m	15		15	
Max. Interunit Height Difference		m	12		12	
Chargeless		m	10		10	
Amount of Additional Charge of Refrigerant		g/m	20		20	
Indoor Unit			**FTXN25KEV1B**		**FTXN35KEV1B**	
Front Panel Color			White		White	
Airflow Rate	H	m³/min (cfm)	9.2 (325)	9.8 (346)	9.6 (339)	10.1 (357)
	M		6.9 (244)	7.9 (279)	7.5 (265)	8.3 (293)
	L		4.6 (162)	6.0 (212)	5.6 (198)	6.4 (226)
	SL		3.9 (138)	5.3 (187)	4.5 (159)	5.7 (201)
Fan	Type		Cross Flow Fan		Cross Flow Fan	
	Motor Output	W	15		15	
	Speed	Steps	5 Steps, Quiet, Auto		5 Steps, Quiet, Auto	
Air Direction Control			Right, Left, Horizontal, Downward		Right, Left, Horizontal, Downward	
Air Filter			Removable / Washable / Mildew Proof		Removable / Washable / Mildew Proof	
Running Current (Rated)		A	0.15 - 0.15 - 0.16	0.15 - 0.15 - 0.16	0.15 - 0.15 - 0.16	0.15 - 0.15 - 0.16
Power Consumption (Rated)		W	29	29	29	29
Power Factor (Rated)		%	84.8 - 84.1 - 75.5	84.8 - 84.1 - 75.5	84.8 - 84.1 - 75.5	84.8 - 84.1 - 75.5
Temperature Control			Microcomputer Control		Microcomputer Control	
Dimensions (H × W × D)		mm	283 × 770 × 198		283 × 770 × 198	
Packaged Dimensions (H × W × D)		mm	261 × 844 × 342		261 × 844 × 342	
Weight		kg	8		8	
Gross Weight		kg	11		11	
Sound Pressure Level	H / M / L / SL	dB(A)	40 / 33 / 26 / 22	40 / 34 / 28 / 25	41 / 34 / 27 / 23	41 / 35 / 29 / 26
Sound Power Level		dB	56	56	57	57
Outdoor Unit			**RXN25KEV1B**		**RXN35KEV1B**	
Casing Color			Ivory White		Ivory White	
Compressor	Type		Hermetically Sealed Swing Type		Hermetically Sealed Swing Type	
	Model		1YC23AJXD		1YC23AJXD	
	Motor Output	W	600		600	
Refrigerant Oil	Type		FVC50K		FVC50K	
	Charge	L	0.375		0.375	
Refrigerant	Type		R-410A		R-410A	
	Charge	kg	0.74		0.95	
Airflow Rate	H	m³/min (cfm)	28.8 (1,017)	28.8 (1,017)	28.8 (1,017)	28.8 (1,017)
Fan	Type		Propeller		Propeller	
	Motor Output	W	20		20	
Running Current (Rated)		A	3.65 - 3.45 - 3.34	3.75 - 3.55 - 3.34	4.75 - 4.55 - 4.34	4.55 - 4.35 - 4.14
Power Consumption (Rated)		W	766	791	1,031	991
Power Factor (Rated)		%	95.4 - 96.5 - 95.6	95.9 - 96.9 - 98.7	98.7 - 98.5 - 99.0	99.0 - 99.1 - 99.7
Starting Current		A	3.9		4.9	
Dimensions (H × W × D)		mm	550 × 658 × 275		550 × 658 × 275	
Packaged Dimensions (H × W × D)		mm	592 × 771 × 348		592 × 771 × 348	
Weight		kg	26		28	
Gross Weight		kg	30		32	
Sound Pressure Level		dB(A)	47	48	49	50
Sound Power Level		dB	61	62	63	64
Drawing No.			3D071262		3D071263	

Note: ■ The data are based on the conditions shown in the table below.

Cooling	Heating	Piping Length
Indoor ; 27°CDB / 19°CWB Outdoor ; 35°CDB / 24°CWB	Indoor ; 20°CDB Outdoor ; 7°CDB / 6°CWB	5 m

Conversion Formulae
kcal/h = kW × 860 Btu/h = kW × 3412 cfm = m³/min × 35.3

Part 3
Printed Circuit Board Connector Wiring Diagram

1. Indoor Unit.....6
2. Outdoor Unit.....8

1. Indoor Unit

Connectors and Other Parts

PCB (1): Control PCB

1)	S1, S7	Connector for fan motor
2)	S6	Connector for swing motor (horizontal blade)
3)	S21	Connector for wired remote controller (option)
4)	S26	Connector for display PCB
5)	S32	Connector for indoor heat exchanger thermistor
6)	H1, H2, H3, FG	Connector for terminal board
7)	V1	Varistor
8)	JA	Address setting jumper
	JB	Fan speed setting when compressor stops for thermostat OFF
	JC	Power failure recovery function (auto-restart)
		∗ Refer to page 140 for detail.
9)	LED A	LED for service monitor (green)
10)	F1U	Fuse (3.15 A, 250 V)

PCB (2): Display PCB

1)	S27	Connector for control PCB
2)	SW1 (S1W)	Forced cooling operation ON/OFF button
3)	LED1 (H1P)	LED for operation (green)
4)	LED2 (H2P)	LED for timer (yellow)
5)	RTH1 (R1T)	Room temperature thermistor

PCB Detail

PCB (1): Control PCB

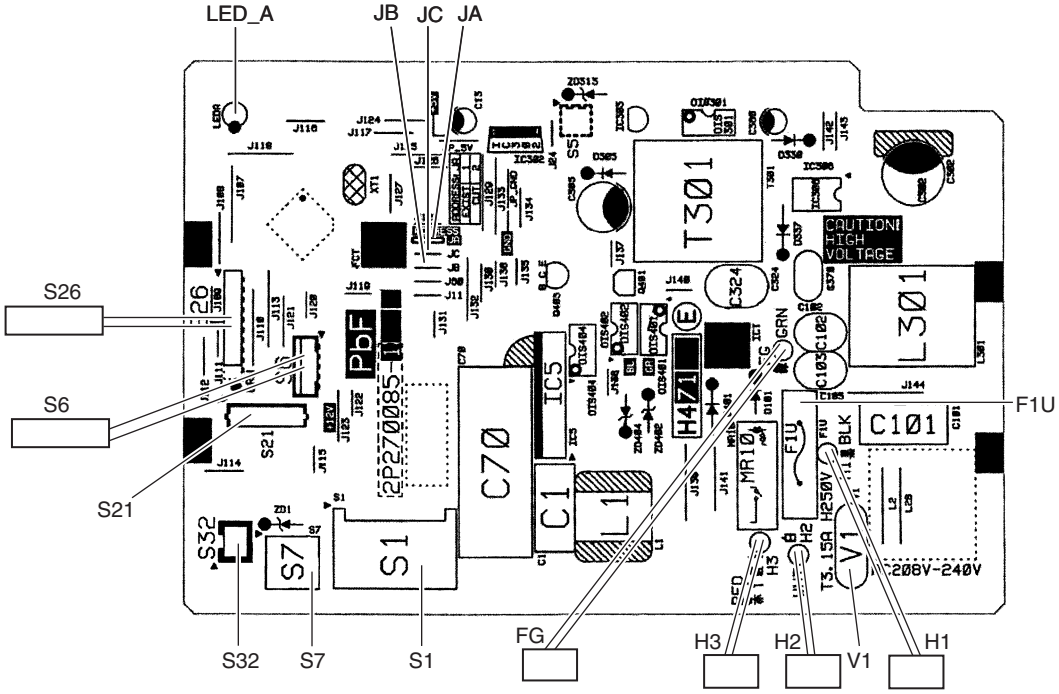

PCB (2): Display PCB

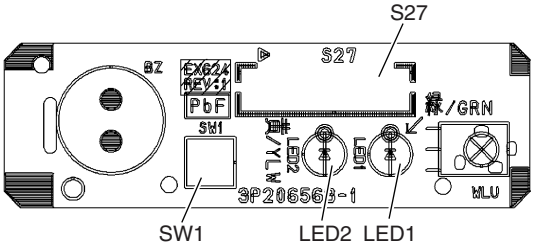

2. Outdoor Unit

Connectors and Other Parts

1)	S20	Connector for electronic expansion valve coil
2)	S40	Connector for overload protector
3)	S70	Connector for fan motor
4)	S80	Connector for four way valve coil
5)	S90	Connector for thermistors (outdoor temperature, outdoor heat exchanger, discharge pipe)
6)	HL1, HN1, S	Connector for terminal board
7)	E1, E2	Terminal for earth
8)	HR1, HR2	Connector for reactor
9)	U, V, W	Connector for compressor
10)	LED A	LED for service monitor (green)
11)	FU1, FU2	Fuse (3.15 A, 250 V)
12)	FU3	Fuse (20 A, 250 V)
13)	V2, V3, V150	Varistor
14)	J5	Jumper for improvement of defrost performance

∗ Refer to page 140 for detail.

PCB Detail

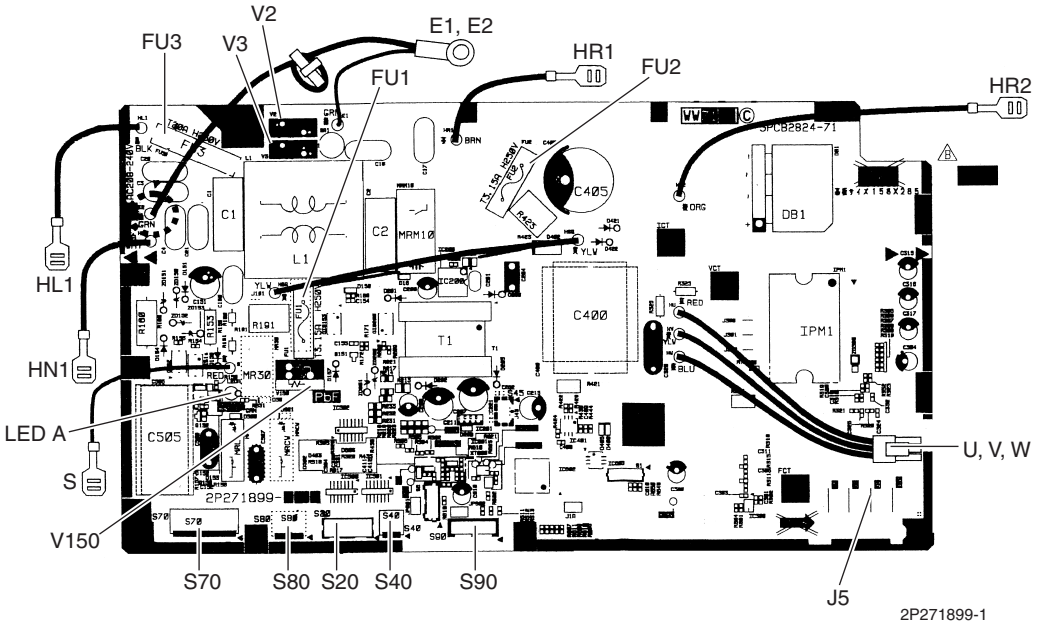

Part 4
Function and Control

1. Main Functions 10
1.1 Temperature Control 10
1.2 Frequency Principle 10
1.3 Airflow Direction Control 12
1.4 Fan Speed Control for Indoor Unit 13
1.5 Program Dry Operation 14
1.6 Automatic Operation 15
1.7 Thermostat Control 16
1.8 NIGHT SET Mode 17
1.9 ECONO Operation 18
1.10 Inverter POWERFUL Operation 19
1.11 Other Functions 20
2. Function of Thermistor 21
3. Control Specification 22
3.1 Mode Hierarchy 22
3.2 Frequency Control 23
3.3 Controls at Mode Changing / Start-up 25
3.4 Discharge Pipe Temperature Control 26
3.5 Input Current Control 27
3.6 Freeze-up Protection Control 28
3.7 Heating Peak-cut Control 28
3.8 Outdoor Fan Control 29
3.9 Liquid Compression Protection Function 29
3.10 Defrost Control 30
3.11 Electronic Expansion Valve Control 31
3.12 Malfunctions 34

1. Main Functions

1.1 Temperature Control

Definitions of Temperatures

The definitions of temperatures are classified as following.

- Room temperature: temperature of lower part of the room
- Set temperature: temperature set by remote controller
- Room thermistor temperature: temperature detected by room temperature thermistor
- Target temperature: temperature determined by microcomputer

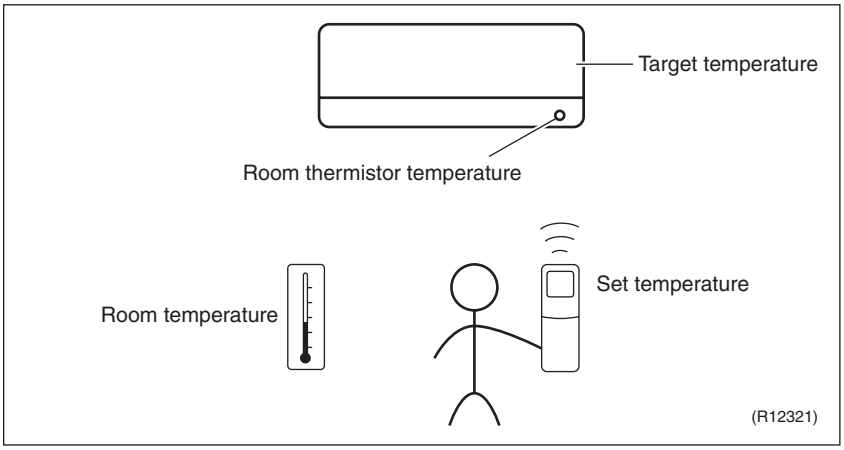

Temperature Control

The temperature of the room is detected by the room temperature thermistor. However, there is difference between the “temperature detected by room temperature thermistor” and the “temperature of lower part of the room”, depending on the type of the indoor unit or installation condition. Practically, the temperature control is done by the “target temperature appropriately adjusted for the indoor unit” and the “temperature detected by room temperature thermistor”.

1.2 Frequency Principle

Main Control Parameters

The compressor is frequency-controlled during normal operation. The target frequency is set by the following 2 parameters coming from the operating indoor unit:

- The load condition of the operating indoor unit
- The difference between the room thermistor temperature and the target temperature

Additional Control Parameters

The target frequency is adapted by additional parameters in the following cases:

- Frequency restrictions
- Initial settings
- Forced cooling operation

Inverter Principle

To regulate the capacity, a frequency control is needed. The inverter makes it possible to vary the rotation speed of the compressor. The following table explains the conversion principle:

Phase	Description
1	The supplied AC power source is converted into the DC power source for the present.
2	The DC power source is reconverted into the three phase AC power source with variable frequency. ■ When the frequency increases, the rotation speed of the compressor increases resulting in an increased refrigerant circulation. This leads to a higher amount of the heat exchange per unit. ■ When the frequency decreases, the rotation speed of the compressor decreases resulting in a decreased refrigerant circulation. This leads to a lower amount of the heat exchange per unit.

Drawing of Inverter

The following drawing shows a schematic view of the inverter principle:

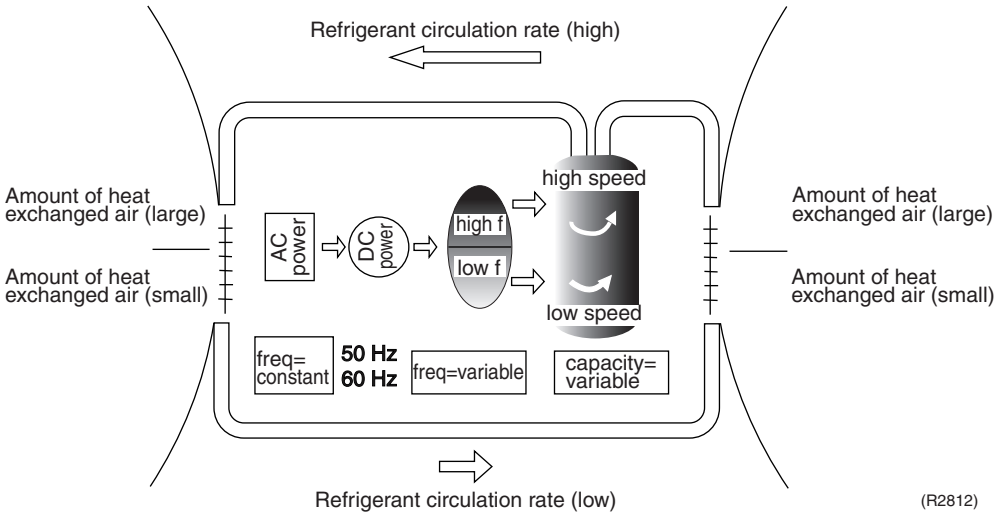

Inverter Features

The inverter provides the following features:

- The regulating capacity can be changed according to the changes in the outdoor temperature and cooling / heating load.
- Quick heating and quick cooling
  The compressor rotational speed is increased when starting the heating (or cooling). This enables to reach the set temperature quickly.
- Even during extreme cold weather, high capacity is achieved. It is maintained even when the outdoor temperature is 2°C.
- Comfortable air conditioning
  A fine adjustment is integrated to keep the room temperature constant.
- Energy saving heating and cooling
  Once the set temperature is reached, the energy saving operation enables to maintain the room temperature at low power.

Frequency Limits

The following functions regulate the minimum and maximum frequency:

Frequency	Functions
Low	■ Four way valve operation compensation. Refer to page 25.
High	■ Compressor protection function. Refer to page 26. ■ Discharge pipe temperature control. Refer to page 26. ■ Input current control. Refer to page 27. ■ Freeze-up protection control. Refer to page 28. ■ Heating peak-cut control. Refer to page 28. ■ Defrost control. Refer to page 30.

Forced Cooling Operation

Refer to page 138 for detail.

1.3 Airflow Direction Control

Power-Airflow Flap

The large flap sends a large volume of air downwards to the floor. The flap provides an optimum control in cooling, dry, and heating mode.

Cooling / Dry Mode
During cooling or dry mode, the flap retracts into the indoor unit. Then, cool air can be blown far and distributed all over the room.

Heating Mode
During heating mode, the large flap directs airflow downwards to spread the warm air to the entire room.

Wide-Angle Louvers

The louvers, made of elastic synthetic resin, provide a wide range of airflow that guarantees a comfortable air distribution.

Auto-Swing

The following table explains the auto swing process for cooling, dry, fan, and heating:

Vertical Swing (up and down)	
Cooling / Dry / Fan	Heating
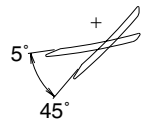	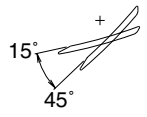

COMFORT AIRFLOW Operation

The vertical swing flap is controlled not to blow the air directly on the person in the room.

Cooling	Heating
	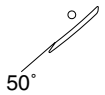

1.4 Fan Speed Control for Indoor Unit

Outline

Phase control and fan speed control contains 9 steps: LLL, LL, SL, L, ML, M, MH, H, and HH. The airflow rate can be automatically controlled depending on the difference between the room thermistor temperature and the target temperature. This is done through phase control and Hall IC control.

For more information about Hall IC, refer to the troubleshooting for fan motor on page 57.

Automatic Fan Speed Control

In automatic fan speed operation, the step “SL” is not available.

Step	Cooling	Heating
LLL		
LL		
L		
ML		
M		
MH		
H		
HH (POWERFUL)	(R6833)	(R6834)

⟺ = The airflow rate is automatically controlled within this range when the FAN setting button is set to automatic.

<Cooling>

The following drawing explains the principle of fan speed control for cooling.

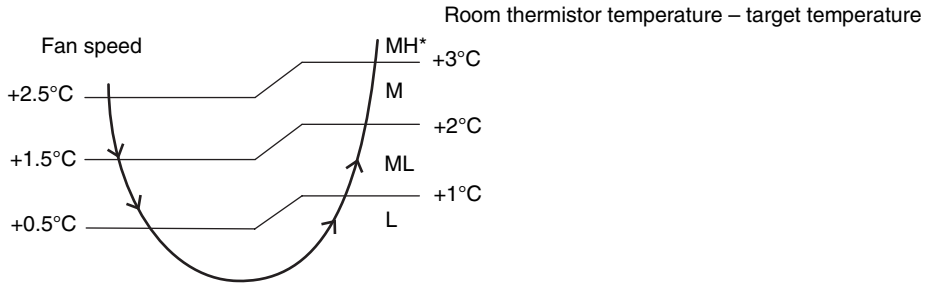

(R14588)

*In automatic fan speed operation, upper limit is at M tap in 30 minutes from the operation start.

<Heating>

On heating mode, the fan speed is regulated according to the indoor heat exchanger temperature and the difference between the room thermistor temperature and the target temperature.

Note:

1. During POWERFUL operation, fan rotates at H tap + 50 rpm.
2. Fan stops during defrost operation.

COMFORT AIRFLOW Operation

- The fan speed is controlled automatically.
- The latest command has the priority between POWERFUL and COMFORT AIRFLOW.

1.5 Program Dry Operation

Outline

Program dry operation removes humidity while preventing the room temperature from lowering. Since the microcomputer controls both the temperature and airflow rate, the temperature adjustment and fan adjustment buttons are inoperable in this mode.

Detail

The microcomputer automatically sets the temperature and airflow rate. The difference between the room thermistor temperature at start-up and the target temperature is divided into two zones. Then, the unit operates in the dry mode with an appropriate capacity for each zone to maintain the temperature and humidity at a comfortable level.

Room thermistor temperature at start-up	Target temperature X	Thermostat OFF point Y	Thermostat ON point Z
24°C or more	Room thermistor temperature at start-up	X – 2.5°C	X – 0.5°C or Y + 0.5°C (zone B) continues for 10 min.
23.5°C ~ 18°C		X – 2.0°C	X – 0.5°C or Y + 0.5°C (zone B) continues for 10 min.
17.5°C ~	18°C	X – 2.0°C	X – 0.5°C = 17.5°C or Y + 0.5°C (zone B) continues for 10 min.

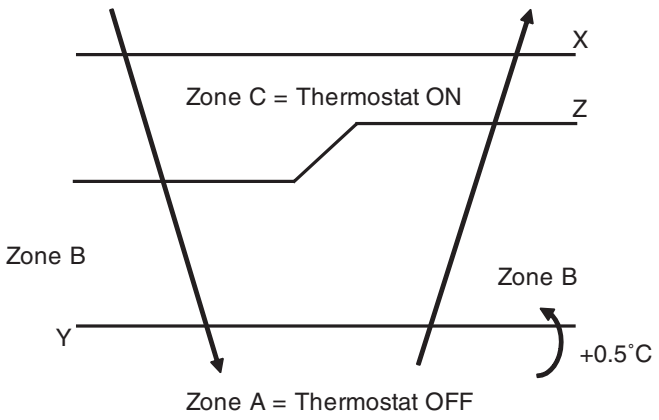

(R11581)

1.6 Automatic Operation

Outline

Automatic Cooling / Heating Function

When the AUTO mode is selected with the remote controller, the microcomputer automatically determines the operation mode as cooling or heating according to the room temperature and the set temperature at start-up, and automatically operates in that mode.

The unit automatically switches the operation mode to maintain the room temperature at the set temperature.

Detail

Ts: set temperature (set by remote controller)
Tt: target temperature (determined by microcomputer)
Tr: room thermistor temperature (detected by room temperature thermistor)
C: correction value

1. The set temperature (Ts) determines the target temperature (Tt).
   (Ts = 18 ~ 30°C).
2. The target temperature (Tt) is calculated as;
   Tt = Ts + C
   where C is the correction value.
   C = 0°C
3. Thermostat ON/OFF point and mode switching point are as follows.
   Tr means the room thermistor temperature.
   (1) Heating → Cooling switching point:
   Tr ≥ Tt + 2.5°C
   (2) Cooling → Heating switching point:
   Tr < Tt – 2.5°C
   (3) Thermostat ON/OFF point is the same as the ON/OFF point of cooling or heating operation.
4. During initial operation
   Tr ≥ Ts : Cooling operation
   Tr < Ts : Heating operation

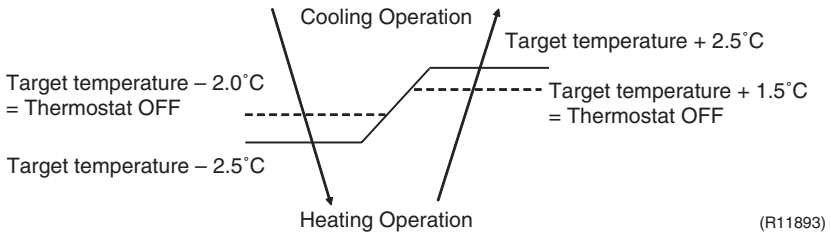

Ex: When the target temperature is 25°C
Cooling → 23°C: Thermostat OFF → 22°C: Switch to heating
Heating → 26.5°C: Thermostat OFF → 27.5°C: Switch to cooling

1.7 Thermostat Control

Thermostat control is based on the difference between the room thermistor temperature and the target temperature.

Thermostat OFF Condition

- The temperature difference is in the zone A.

Thermostat ON Condition

- The temperature difference returns to the zone C after being in the zone A.
- The system resumes from defrost control in any zones except A.
- The operation turns on in any zones except A.
- The monitoring time has passed while the temperature difference is in the zone B. (Cooling / Dry : 10 minutes, Heating : 10 seconds)

<Cooling / Dry>

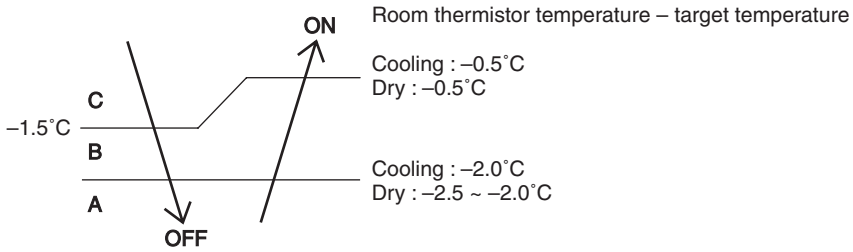

(R12319)

<Heating>

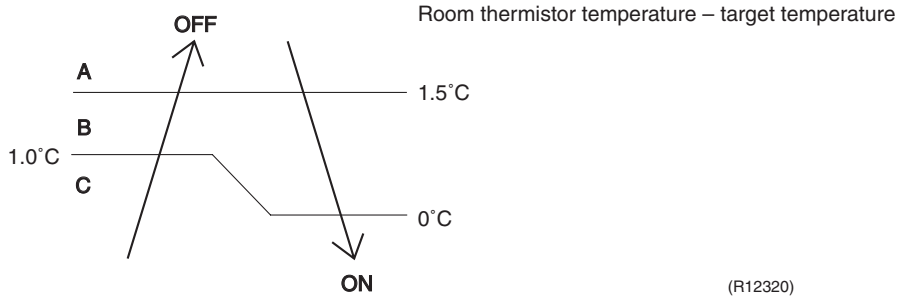

(R12320)

Refer to “Temperature Control” on page 10 for detail.

1.8 NIGHT SET Mode

Outline

When the OFF timer is set, the NIGHT SET Mode is automatically activated. The NIGHT SET Mode keeps the airflow rate setting.

Detail

The NIGHT SET Mode continues operation at the target temperature for the first one hour, then automatically raises the target temperature slightly in the case of cooling, or lowers it slightly in the case of heating. This prevents excessive cooling in summer and excessive heating in winter to ensure comfortable sleeping conditions, and also conserves electricity.

<Cooling>

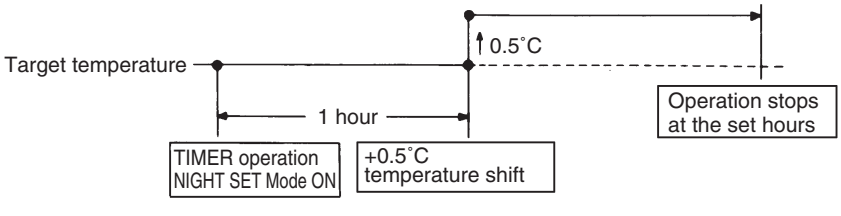

(R10870)

<Heating>

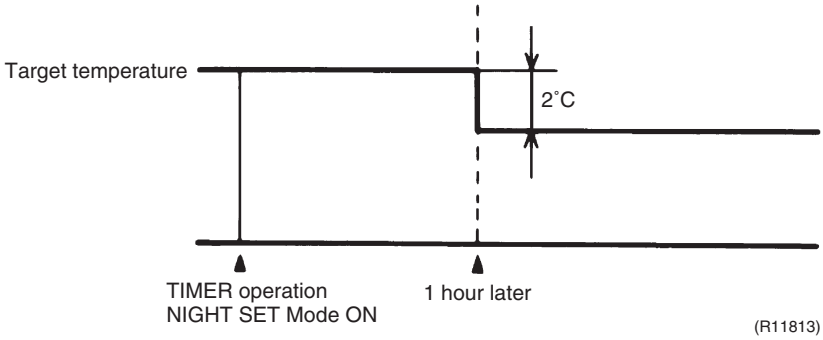

(R11813)

1.9 ECONO Operation

The "ECONO operation" reduces the maximum operating current and the power consumption. This operation is particularly convenient for energy-saving-oriented users. It is also a major bonus for those whose breaker capacities do not allow the use of multiple electrical devices and air conditioners.
It is easily activated from the wireless remote controller by pushing the ECONO button.

- When this function is activated, the maximum capacity also decreases.
- The remote controller can send the ECONO command when the unit is in COOL, HEAT, DRY, or AUTO operation. This function can only be set when the unit is running. Pressing the ON/OFF button on the remote controller cancels the function.
- This function and POWERFUL operation cannot be used at the same time. The latest command has the priority.

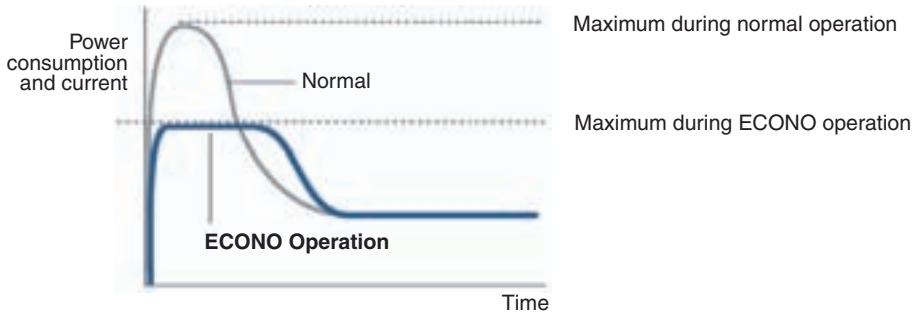

(R9288)

1.10 Inverter POWERFUL Operation

Outline

In order to exploit the cooling and heating capacity to full extent, operate the air conditioner by increasing the indoor fan rotating speed and the compressor frequency.

Detail

When POWERFUL button is pressed, the fan speed and target temperature are converted to the following states for 20 minutes.

Operation mode	Fan speed	Target temperature
COOL	H tap + 50 rpm	18°C
DRY	Dry rotating speed + 50 rpm	Lowered by 2.5°C
HEAT	H tap + 50 rpm	31°C
FAN	H tap + 50 rpm	—
AUTO	Same as cooling / heating in POWERFUL operation	The target temperature is kept unchanged.

Ex: POWERFUL operation in cooling mode

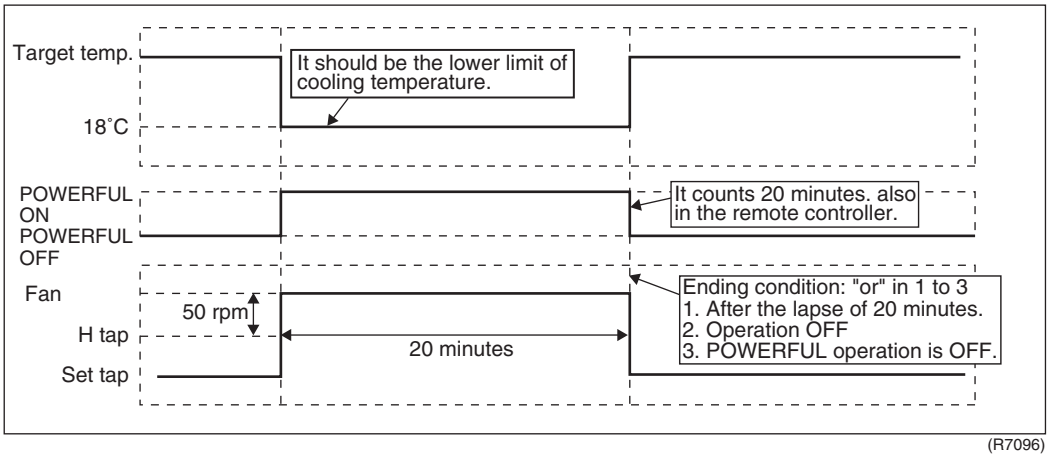

(R7096)

1.11 Other Functions

1.11.1 Hot-Start Function

In order to prevent the cold air blast that normally comes when heating operation is started, the temperature of the indoor heat exchanger is detected, and either the airflow is stopped or is made very weak thereby carrying out comfortable heating of the room.
∗The cold air blast is also prevented using a similar control when the defrosting operation is started or when the thermostat is turned ON.

1.11.2 Signal Receiving Sign

When the indoor unit receives a signal from the remote controller, the unit emits a signal receiving sound.

1.11.3 Indoor Unit ON/OFF Button

An ON/OFF button is provided on the display of the unit.

- Press this button once to start operation. Press once again to stop it.
- This button is useful when the remote controller is missing or the battery has run out.
- The operation mode refers to the following table.

Mode	Temperature setting	Airflow rate
AUTO	25°C	Automatic

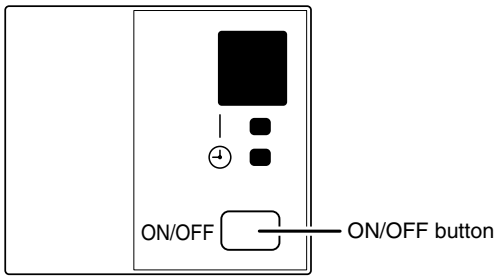

(R14568)

<Forced cooling operation>
Forced cooling operation can be started by pressing the ON/OFF button for 5 to 9 seconds while the unit is not operating.
Refer to page 138 for detail.

Note: When the ON/OFF button is pressed for 10 seconds or more, the forced cooling operation is stopped.

1.11.4 Titanium Apatite Photocatalytic Air-Purifying Filter

This filter combines the Air-Purifying Filter and Titanium Apatite Photocatalytic Deodorizing Filter as a single highly effective filter. The filter traps microscopic particles, decomposes odors and even deactivates bacteria and viruses. It lasts for 3 years without replacement if washed about once every 6 months.

1.11.5 Auto-restart Function

If a power failure (including one for just a moment) occurs during the operation, the operation restarts automatically when the power is restored in the same condition as before the power failure.

Note: It takes 3 minutes to restart the operation because the 3-minute standby function is activated.

2. Function of Thermistor

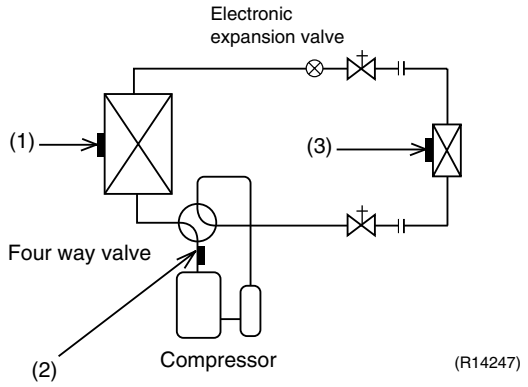

(1) Outdoor Heat Exchanger Thermistor

1. The outdoor heat exchanger thermistor is used for controlling target discharge pipe temperature. The system sets the target discharge pipe temperature according to the outdoor and indoor heat exchanger temperature, and controls the electronic expansion valve opening so that the target discharge pipe temperature can be obtained.
2. In cooling operation, the outdoor heat exchanger thermistor is used for detecting disconnection of the discharge pipe thermistor. When the discharge pipe temperature becomes lower than the outdoor heat exchanger temperature, the discharge pipe thermistor is judged as disconnected.
3. In cooling operation, the outdoor heat exchanger thermistor is used for high pressure protection.

(2) Discharge Pipe Thermistor

1. The discharge pipe thermistor is used for controlling discharge pipe temperature. If the discharge pipe temperature (used in place of the inner temperature of the compressor) rises abnormally, the operating frequency becomes lower or the operation halts.
2. The discharge pipe thermistor is used for detecting disconnection of the discharge pipe thermistor.

(3) Indoor Heat Exchanger Thermistor

1. The indoor heat exchanger thermistor is used for controlling target discharge pipe temperature. The system sets the target discharge pipe temperature according to the outdoor and indoor heat exchanger temperature, and controls the electronic expansion valve opening so that the target discharge pipe temperature can be obtained.
2. In cooling operation, the indoor heat exchanger thermistor is used for freeze-up protection control. If the indoor heat exchanger temperature drops abnormally, the operating frequency becomes lower or the operation halts.
3. In heating operation, the indoor heat exchanger thermistor is used for detecting disconnection of the discharge pipe thermistor. When the discharge pipe temperature becomes lower than the indoor heat exchanger temperature, the discharge pipe thermistor is judged as disconnected.

3. Control Specification

3.1 Mode Hierarchy

Outline

There are two modes; the one is the normal operation mode and the other is the forced operation mode for installation and servicing.

Detail

- Air conditioner control mode
  - Forced operation mode
    - Forced cooling operation
  - Power transistor test mode
  - Normal operation mode
    - Fan
    - Cooling (includes drying)
    - Heating
      - Heating
      - Defrosting
    - Stop (indoor unit: OFF)
      - Preheating operation
      - Discharging from capacitor
      - Stop

(R14248)

Note: Unless specified otherwise, an indoor dry operation command is regarded as cooling operation.

3.2 Frequency Control

Outline

Frequency is determined according to the difference between the room thermistor temperature and the target temperature.
The function is explained as follows.

1. How to determine frequency
2. Frequency command from the indoor unit (Difference between the room thermistor temperature and the target temperature)
3. Frequency initial setting
4. PI control

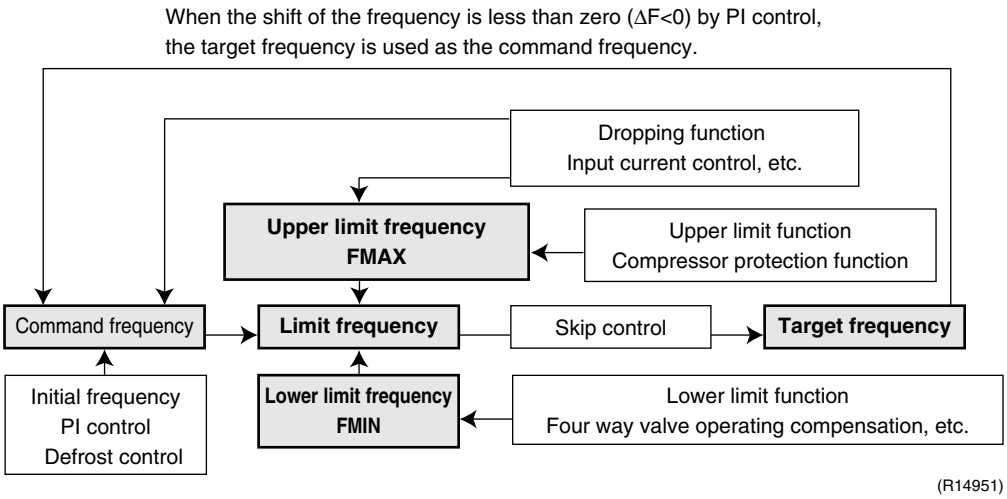

Detail

How to Determine Frequency

The compressor's frequency is determined by taking the following steps.

1. Determine command frequency

- Command frequency is determined in the following order of priority.

1. Limiting defrost control time
2. Forced cooling
3. Indoor frequency command

2. Determine upper limit frequency

- The minimum value is set as an upper limit frequency among the frequency upper limits of the following functions:
  Compressor protection, input current, discharge pipe temperature, heating peak-cut, freeze-up protection, defrost.

3. Determine lower limit frequency

- The maximum value is set as an lower limit frequency among the frequency lower limits of the following functions:
  Four way valve operation compensation, draft prevention, pressure difference upkeep.

4. Determine prohibited frequency

- There is a certain prohibited frequency such as a power supply frequency.

Indoor Frequency Command (ΔD signal)

The difference between the room thermistor temperature and the target temperature is taken as the "ΔD signal" and is used for frequency command.

Temperature difference	ΔD signal	Temperature difference	ΔD signal	Temperature difference	ΔD signal	Temperature difference	ΔD signal
–2.0	∗Th OFF	0	4	2.0	8	4.0	C
–1.5	1	0.5	5	2.5	9	4.5	D
–1.0	2	1.0	6	3.0	A	5.0	E
–0.5	3	1.5	7	3.5	B	5.5	F

∗Th OFF = Thermostat OFF

Frequency Initial Setting

<Outline>

When starting the compressor, the frequency is initialized according to the ΔD value and the Q value of the indoor unit.

Q value: Indoor unit output determined from indoor unit volume, airflow rate and other factors.

PI Control (Determine Frequency Up / Down by ΔD Signal)

1. **P control**
   The ΔD value is calculated in each sampling time (15 ~ 20 seconds), and the frequency is adjusted according to its difference from the frequency previously calculated.

2. **I control**
   If the operating frequency does not change for more than a certain fixed time, the frequency is adjusted according to the ΔD value.
   When the ΔD value is low, the frequency is lowered.
   When the ΔD value is high, the frequency is increased.

3. **Frequency management when other controls are functioning**
   - When frequency is dropping;
     Frequency management is carried out only when the frequency drops.
   - For limiting lower limit
     Frequency management is carried out only when the frequency rises.

4. **Upper and lower limit of frequency by PI control**
   The frequency upper and lower limits are set according to the command on indoor unit.
   When the indoor or outdoor unit quiet operation command comes from the indoor unit, the upper limit frequency is lower than the usual setting.

3.3 Controls at Mode Changing / Start-up

3.3.1 Preheating Operation

Outline

The inverter operation in open phase starts with the conditions of the preheating command from the indoor unit, the outdoor temperature, and the discharge pipe temperature.

Detail

Outdoor temperature ≥ 7°C → Control A
Outdoor temperature < 7°C → Control B

Control A

- ON condition
  Discharge pipe temperature < 10°C
- OFF condition
  Discharge pipe temperature > 12°C
  Radiation fin temperature ≥ 90°C

Control B

- ON condition
  Discharge pipe temperature < 20°C
- OFF condition
  Discharge pipe temperature > 22°C
  Radiation fin temperature ≥ 90°C

3.3.2 Four Way Valve Switching

Outline

In heating operation, current is conducted, and in cooling and defrosting, current is not conducted. In order to eliminate the switching sound as the four way valve coil switches from ON to OFF when the heating is stopped, the OFF delay switch of the four way valve is carried out after the operation stopped.

Detail

OFF delay switch of four way valve:
The four way valve coil is energized for 160 seconds after the operation is stopped.

3.3.3 Four Way Valve Operation Compensation

Outline

At the beginning of the operation as the four way valve is switched, the pressure difference to activate the four way valve is acquired by having output frequency which is more than a certain fixed frequency, for a certain fixed time.

Detail

Starting Conditions

1. When starting compressor for heating
2. When the operation mode changes from heating to cooling
3. When starting compressor for defrosting
4. When starting compressor for heating after defrosting
5. When starting compressor for the first time after resetting with the power ON
6. When starting compressor after the fault of switching over cooling / heating

The lower limit of frequency keeps **A** Hz for **B** seconds with any conditions 1 through 6 above.

A (Hz)	62
B (seconds)	50

3.3.4 3-minute Standby

Turning on the compressor is prohibited for 3 minutes after turning it off.
(Except when defrosting.)

3.3.5 Compressor Protection Function

When turning the compressor from OFF to ON, the upper limit of frequency is set as follows. (The function is not activated when defrosting.)

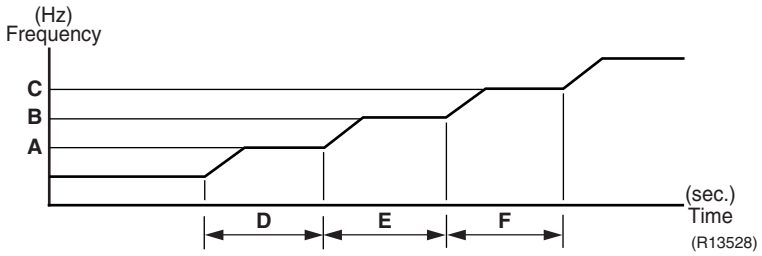

A (Hz)	58
B (Hz)	72
C (Hz)	90
D (seconds)	180
E (seconds)	180
F (seconds)	10

3.4 Discharge Pipe Temperature Control

Outline

The discharge pipe temperature is used as the internal temperature of the compressor. If the discharge pipe temperature rises above a certain level, the upper limit of frequency is set to keep this temperature from rising further.

Detail

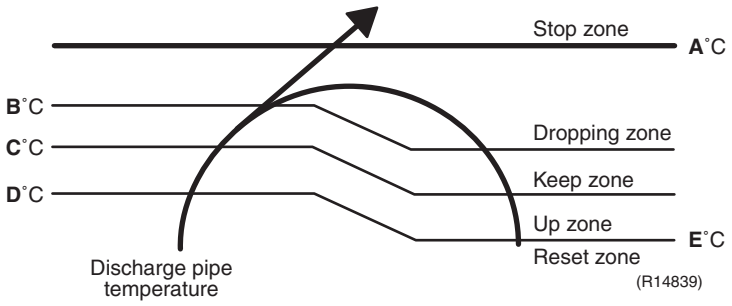

Zone	Control
Stop zone	When the temperature reaches the stop zone, the compressor stops.
Dropping zone	The upper limit of frequency decreases.
Keep zone	The upper limit of frequency is kept.
Up zone	The upper limit of frequency increases.
Reset zone	The upper limit of frequency is canceled.

A (°C)	110
B (°C)	105
C (°C)	101
D (°C)	99
E (°C)	97

3.5 Input Current Control

Outline

The microcomputer calculates the input current while the compressor is running, and sets the frequency upper limit from the input current.
In case of heat pump model, this control which is the upper limit control of the frequency takes priority over the lower limit of control of four way valve operation compensation.

Detail

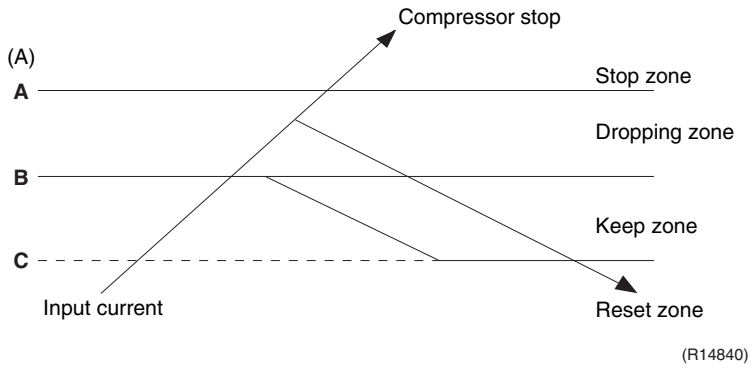

Frequency control in each zone

Stop zone

- After 2.5 seconds in this zone, the compressor is stopped.

Dropping zone

- The upper limit of the compressor frequency is defined as operation frequency – 2 Hz.
- After this, the output frequency is pulled down by 2 Hz every second until it reaches the keep zone.

Keep zone

- The present maximum frequency goes on.

Reset zone

- Limit of the frequency is canceled.

		25 class		35 class	
		Cooling	Heating	Cooling	Heating
A (A)		8.5	10.0	9.25	10.5
B (A)	Normal mode	6.5	8.0	7.25	8.5
	ECONO mode	2.75		2.75	
C (A)	Normal mode	5.75	7.25	6.5	7.75
	ECONO mode	2.0		2.0	

Limitation of current dropping and stop value according to the outdoor temperature

- The current drops when outdoor temperature becomes higher than a certain level (depending on the model).

3.6 Freeze-up Protection Control

Outline

During cooling operation, the signal sent from the indoor unit controls the operating frequency limitation and prevents freezing of the indoor heat exchanger. (The signal from the indoor unit is divided into zones.)

Detail

The operating frequency limitation is judged with the indoor heat exchanger temperature.

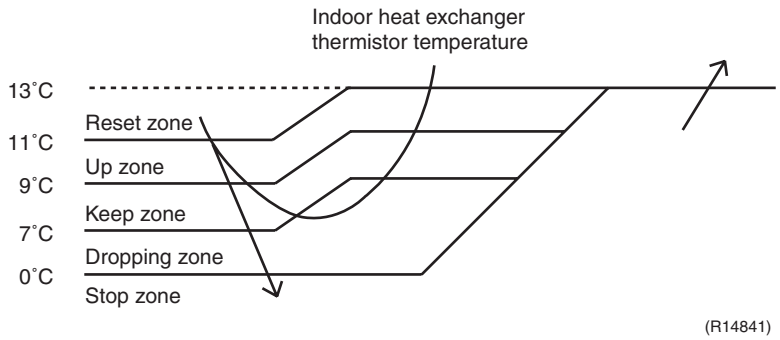

3.7 Heating Peak-cut Control

Outline

During heating operation, the indoor heat exchanger temperature determines the frequency upper limit to prevent abnormal high pressure.

Detail

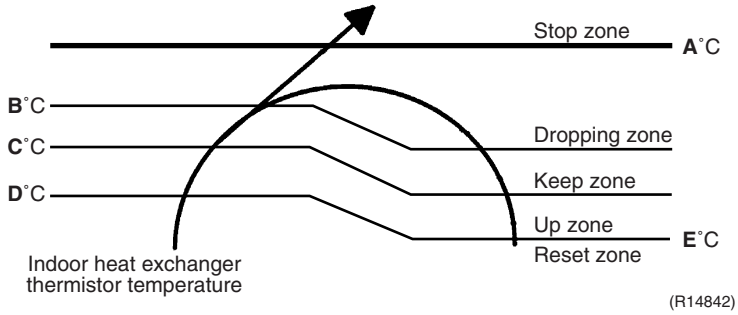

Zone	Control
Stop zone	When the temperature reaches the stop zone, the compressor stops.
Dropping zone	The upper limit of frequency decreases.
Keep zone	The upper limit of frequency is kept.
Up zone	The upper limit of frequency increases.
Reset zone	The upper limit of frequency is canceled.

A (°C)	61
B (°C)	55
C (°C)	52
D (°C)	50
E (°C)	45

3.8 Outdoor Fan Control

1. Fan ON control to cool down the electrical box
The outdoor fan is turned ON when the electrical box temperature is high while the compressor is OFF.

2. Fan OFF control while defrosting
The outdoor fan is turned OFF while defrosting.

3. Fan OFF delay when stopped
The outdoor fan is turned OFF 70 seconds after the compressor stops.

4. Fan ON/OFF control for pressure difference upkeep
The outdoor fan is controlled for keeping the pressure difference while cooling with low outdoor temperature.
- When the pressure difference is low, the outdoor fan stops.
- When the pressure difference is high, the outdoor fan rotates.

5. Fan control while forced cooling operation
The outdoor fan is controlled as well as normal operation while the forced cooling operation.

6. Fan ON/OFF control when operation starts / stops
The outdoor fan is turned ON when the operation starts. The outdoor fan is turned OFF when the operation stops.

3.9 Liquid Compression Protection Function

Outline

In order to obtain the dependability of the compressor, the compressor is stopped according to the outdoor temperature and temperature of the outdoor heat exchanger.

Detail

■ Operation stops depending on the outdoor temperature
Compressor turns off under the conditions that the system is in cooling operation and outdoor temperature is below 0°C.

3.10 Defrost Control

Outline

Defrosting is carried out by the cooling cycle (reverse cycle). The defrosting time or outdoor heat exchanger temperature must be more than a certain value to finish.

Detail

Conditions for Starting Defrost

- The starting conditions are determined with the outdoor temperature and the outdoor heat exchanger temperature.
- The system is in heating operation.
- The compressor operates for 6 minutes.
- More than 28 minutes of accumulated time have passed since the start of the operation, or ending the previous defrosting.

Conditions for Canceling Defrost

The judgment is made with outdoor heat exchanger temperature. (4 ~ 22°C)

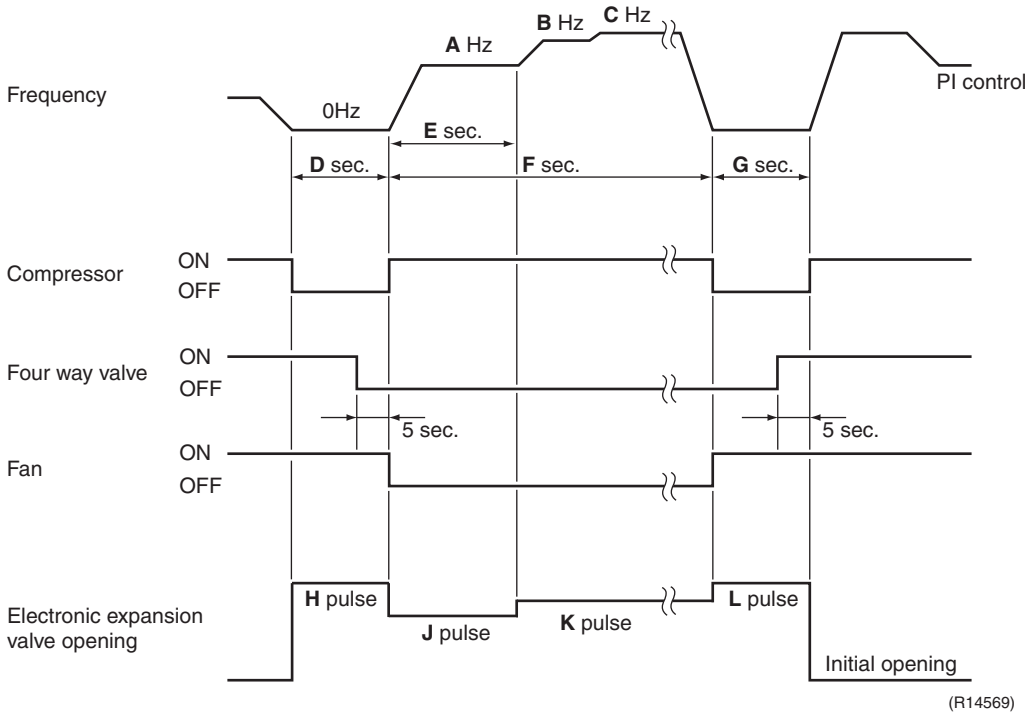

	25 class	35 class
A (Hz)	68	72
B (Hz)	80	84
C (Hz)	88	
D (seconds)	40	
E (seconds)	60	
F (seconds)	510	
G (seconds)	40	
H (pulse)	470	
J (pulse)	390	
K (pulse)	430	
L (pulse)	470	

3.11 Electronic Expansion Valve Control

Outline

The following items are included in the electronic expansion valve control.

Electronic expansion valve is fully closed

1. Electronic expansion valve is fully closed when turning on the power.
2. Pressure equalization control

Open Control

1. Electronic expansion valve control when starting operation
2. Electronic expansion valve control when the frequency changes
3. Electronic expansion valve control for defrosting
4. Electronic expansion valve control when the discharge pipe temperature is abnormally high
5. Electronic expansion valve control when the discharge pipe thermistor is disconnected

Feedback Control

1. Target discharge pipe temperature control

Detail

The followings are the examples of control which function in each mode by the electronic expansion valve control.

● : Holding Functions – : No Functions	When the power turns on or when the compressor stops	When the operation starts	When the frequency changes under starting control	During target discharge pipe temperature control	When the frequency changes under target discharge pipe temperature control	When the disconnection of the discharge pipe thermistor is ascertained	When the frequency changes under the control for disconnection of the discharge pipe thermistor	Under defrost control
Cooling								
Starting control	–	●	–	–	–	–	–	–
Control when the frequency changes	–	–	●	–	●	–	–	–
Target discharge pipe temperature control	–	–	–	●	–	–	–	–
Control for disconnection of the discharge pipe thermistor	–	–	–	–	–	●	●	–
High discharge pipe temperature control	–	●	●	●	●	–	–	–
Pressure equalizing control	●	–	–	–	–	–	–	–
Opening limit control	–	●	●	●	●	●	●	–
Heating								
Starting control	–	●	–	–	–	–	–	–
Control when the frequency changes	–	–	●	–	●	–	–	–
Target discharge pipe temperature control	–	–	–	●	–	–	–	–
Control for disconnection of the discharge pipe thermistor	–	–	–	–	–	●	●	–
High discharge pipe temperature control	–	●	●	●	●	–	–	–
Defrost control	–	–	–	–	–	–	–	●
Pressure equalizing control	●	–	–	–	–	–	–	–
Opening limit control	–	●	●	●	●	●	●	–

3.11.1 Fully Closing with Power ON

The electronic expansion valve is initialized when turning on the power. The opening position is set and the pressure equalization is developed.

3.11.2 Pressure Equalization Control

When the compressor is stopped, the pressure equalization control is activated. The electronic expansion valve opens, and develops the pressure equalization.

3.11.3 Opening Limit Control

Outline

A maximum and minimum opening of the electronic expansion valve are limited.

Detail

Maximum opening (pulse)	470
Minimum opening (pulse)	52

The electronic expansion valve is fully closed when cooling operation stops, and is opened at fixed degree during defrosting.

3.11.4 Starting Operation Control

The electronic expansion valve opening is controlled when the operation starts, and prevents the superheating or liquid compression.

3.11.5 Control when the frequency changes

When the target discharge pipe temperature control is active, if the target frequency changes for a specified value in a certain time period, the target discharge pipe temperature control is canceled and the target opening of the electronic expansion valve is changed according to the shift.

3.11.6 High Discharge Pipe Temperature Control

When the compressor is operating, if the discharge pipe temperature exceeds a certain value, the electronic expansion valve opens and the refrigerant runs to the low pressure side. This procedure lowers the discharge pipe temperature.

3.11.7 Control for Disconnection of the Discharge Pipe Thermistor

Outline

The disconnection of the discharge pipe thermistor is detected by comparing the discharge pipe temperature with the condensing temperature. If the discharge pipe thermistor is disconnected, the electronic expansion valve opens according to the outdoor temperature and the operation frequency, and operates for a specified time, and then stops.
After 3 minutes of waiting, the operation restarts and checks if the discharge pipe thermistor is disconnected. If the discharge pipe thermistor is disconnected, the system stops after operating for a specified time.
If the disconnection is detected repeatedly, the system is shut down. When the compressor runs for 60 minutes without any error, the error counter is reset.

Detail

When the starting control finishes, the detection timer for disconnection of the discharge pipe thermistor (720 seconds) starts. When the timer is over, the following adjustment is made.

1. When the operation mode is cooling
   When the following condition is fulfilled, the discharge pipe thermistor disconnection is ascertained.
   Discharge pipe temperature + 6°C < outdoor heat exchanger temperature
2. When the operation mode is heating
   When the following condition is fulfilled, the discharge pipe thermistor disconnection is ascertained.
   Discharge pipe temperature + 6°C < indoor heat exchanger temperature

Adjustment when the thermistor is disconnected

When the disconnection is ascertained, the compressor continues operation for 9 minutes and then stops.
When the compressor stops repeatedly, the system is shut down.

3.11.8 Target Discharge Pipe Temperature Control

The target discharge pipe temperature is obtained from the indoor and outdoor heat exchanger temperature, and the electronic expansion valve opening is adjusted so that the actual discharge pipe temperature becomes close to the target discharge pipe temperature. (Indirect SH (superheating) control using the discharge pipe temperature)

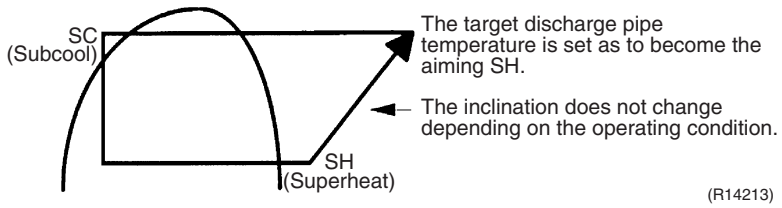

The electronic expansion valve opening and the target discharge pipe temperature are adjusted every 20 seconds. The target discharge pipe temperature is controlled by indoor heat exchanger temperature and outdoor heat exchanger temperature. The opening degree of the electronic expansion valve is controlled by followings.

- Target discharge pipe temperature
- Actual discharge pipe temperature
- Previous discharge pipe temperature

3.12 Malfunctions

3.12.1 Sensor Malfunction Detection

Sensor malfunction may occur in the thermistor.

Relating to Thermistor Malfunction

1. Outdoor heat exchanger thermistor
2. Discharge pipe thermistor
3. Radiation fin thermistor
4. Outdoor temperature thermistor

3.12.2 Detection of Overcurrent and Overload

Outline

An excessive output current is detected and the OL temperature is observed to protect the compressor.

Detail

- If the OL (compressor head) temperature exceeds about 120°C, the system shuts down the compressor.
- If the inverter current exceeds about 8.5 ~ 10.5 A, the system shuts down the compressor. The upper limit of the current decreases when the outdoor temperature exceeds a certain level.

3.12.3 Refrigerant Shortage Control

Outline

I: Detecting by power consumption

If the power consumption is below the specified value and the frequency is higher than the specified frequency, it is regarded as refrigerant shortage.

The power consumption is low comparing with that in the normal operation when refrigerant is insufficient, and refrigerant shortage is detected by checking power consumption.

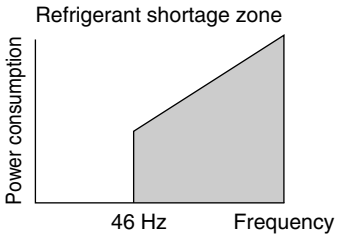

(R14570)

II: Detecting by discharge pipe temperature

If the discharge pipe temperature is higher than the target discharge pipe temperature, and the electronic expansion valve is fully open for more than the specified time, it is regarded as refrigerant shortage.

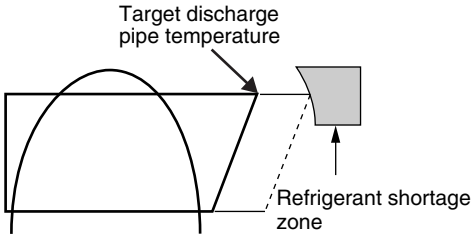

(R1391)

Refer to page 83 for detail.

Part 5
Operation Manual

1. System Configuration 36
2. Operation Manual 37
   2.1 Remote Controller 37
   2.2 AUTO · DRY · COOL · HEAT · FAN Operation 38
   2.3 Adjusting the Airflow Direction 40
   2.4 COMFORT AIRFLOW Operation 42
   2.5 POWERFUL Operation 43
   2.6 ECONO Operation 44
   2.7 OFF TIMER Operation 45
   2.8 ON TIMER Operation 46

1. System Configuration

After installation and trial operation of the room air conditioner are completed, the air conditioner should be handled and operated as described in the following pages. Every user should be informed on the correct method of operation and how to check if it can cool (or heat) well, and how to use it efficiently.

Providing instructions to the user can reduce requests for servicing by 80%. However proficient the installation and operating functions of the air conditioning system are, the customer may fault either the room air conditioner or its installation work when it is actually due to improper handling. The installation work and the handing-over of the unit can only be considered completed when its handling has been fully explained to the user without using technical terms, and while imparting full knowledge of the equipment.

2. Operation Manual

2.1 Remote Controller

Names of Parts

■ Remote Controller

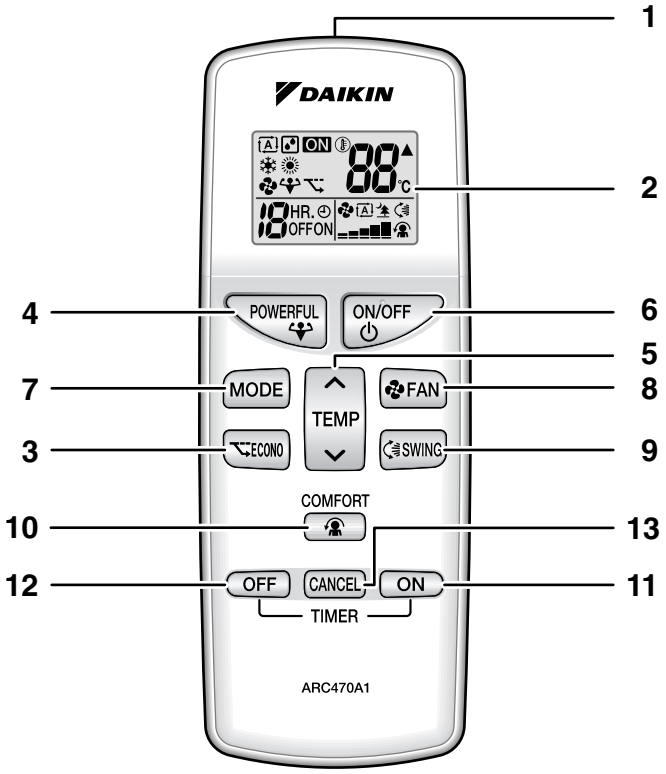

<ARC470A1>

1. **Signal transmitter:**
   • It sends signals to the indoor unit.
2. **Display (LCD):**
   • It displays the current settings.
   (In this illustration, each section is shown with its displays on for the purpose of explanation.)
3. **ECONO button:**
   ECONO operation (page 15)
4. **POWERFUL button:**
   POWERFUL operation (page 14)
5. **TEMPERATURE adjustment button:**
   • It changes the temperature setting.
6. **ON/OFF button:**
   • Press this button once to start operation. Press once again to stop it.
7. **MODE selector button:**
   • It selects the operation mode. (AUTO/DRY/COOL/HEAT/FAN) (page 9)
8. **FAN setting button:**
   • It selects the airflow rate setting.
9. **SWING button:**
   • Adjusting the airflow direction. (page 11)
10. **COMFORT AIRFLOW button:**
    COMFORT AIRFLOW operation (page 13)
11. **ON TIMER button:** (page 17)
12. **ON TIMER button:** (page 16)
13. **TIMER CANCEL button:**
    • It cancels the timer setting.

2.2 AUTO · DRY · COOL · HEAT · FAN Operation

AUTO·DRY·COOL·HEAT·FAN Operation

The air conditioner operates with the operation mode of your choice. From the next time on, the air conditioner will operate with the same operation mode.

■ To start operation

1. Press MODE and select a operation mode.

- Each pressing of the button advances the mode setting in sequence.

: AUTO : HEAT
: DRY : FAN
: COOL

2. Press ON/OFF .

- " ON " is displayed on the LCD.
- The OPERATION lamp lights up.

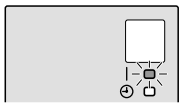

■ To stop operation

3. Press ON/OFF again.

- " ON " is displayed on the LCD.
- The OPERATION lamp lights up.

■ To change the temperature setting

4. Press TEMP .

AUTO or COOL or HEAT operation	DRY or FAN operation
Press ∧ to raise the temperature and Press ∨ to lower the temperature.	The temperature setting is not variable.
Set to the temperature you like. 27 °C	

9

AUTO·DRY·COOL·HEAT·FAN Operation

■ To change the airflow rate setting

5. Press FAN.

AUTO or COOL or HEAT or FAN operation	DRY operation
5 levels of airflow rate setting from " = " to " ▮ " plus " A " " " are available.	The airflow rate setting is not variable.

- Indoor unit quiet operation
  When the airflow is set to " ", the noise from the indoor unit will become quieter.
  Use this when making the noise quieter.

NOTE

■ **Notes on HEAT operation**
- Since this air conditioner heats the room by taking heat from outdoor air to indoors, the heating capacity becomes smaller in lower outdoor temperatures. If the heating effect is insufficient, it is recommended to use another heating appliance in combination with the air conditioner.
- The heat pump system heats the room by circulating hot air around all parts of the room. After the start of HEAT operation, it takes some time before the room gets warmer.
- In HEAT operation, frost may occur on the outdoor unit and lower the heating capacity. In that case, the system switches into defrosting operation to take away the frost.
- During defrosting operation, hot air does not flow out of indoor unit.
- A pinging sound may be heard during defrosting operation, which, however does not mean that the air conditioner has failures.

■ **Note on COOL operation**
- This air conditioner cools the room by releasing the heat in the room outside.
  Therefore, the cooling performance of the air conditioner may be degraded if the outdoor temperature is high.

■ **Note on DRY operation**
- The computer chip works to rid the room of humidity while maintaining the temperature as much as possible. It automatically controls temperature and airflow rate, so manual adjustment of these functions is unavailable.

■ **Note on AUTO operation**
- In AUTO operation, the system selects an appropriate operation mode (COOL or HEAT) based on the room and outside temperatures and starts the operation.
- The system automatically reselects setting at a regular interval to bring the room temperature to user-setting level.

■ **Note on FAN operation**
- This mode is valid for fan only.

■ **Note on airflow rate setting**
- At smaller airflow rates, the cooling (heating) effect is also smaller.

10

2.3 Adjusting the Airflow Direction

Adjusting the Airflow Direction

You can adjust the airflow direction to increase your comfort.

■ To start auto swing

Upper and lower airflow direction

Press SWING.

- " " is displayed on the LCD.
- The flap (horizontal blade) will begin to swing.

To set the flap at desired position

- This function is effective while flap is in auto swing mode.

Press SWING when the flap has reached the desired position.

- The flap will stop moving.
- " " disappears from the LCD.

11

Adjusting the Airflow Direction

■ To adjust the louvers (vertical blades)

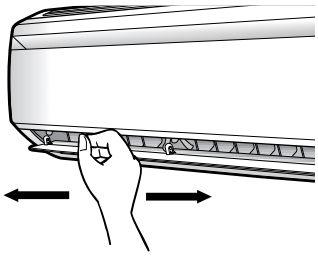

Hold the knob and move the louvers.
(You will find a knob on the left-side and the right-side blades.)

- When the unit is installed in the corner of a room, the direction of the louvers should be facing away from the wall.
  If they face the wall, the wall will block off the wind, causing the cooling (or heating) efficiency to drop.

⚠ CAUTION

- Always use a remote controller to adjust the angles of the flap. If you attempt to move the flap and louvers forcibly with hand when they are swinging, the mechanism may be broken.
- Be careful when adjusting the louvers. Inside the air outlet, a fan is rotating at a high speed.

NOTE

■ **Notes on the angles of the flap**

- The flap swinging range depends on the operation. (See the figure.)
- If the air conditioner is operated in HEAT or DRY operation with the flap kept stopped in the downward direction, the flap will automatically start operating in approximately an hour in order to prevent dew condensation.

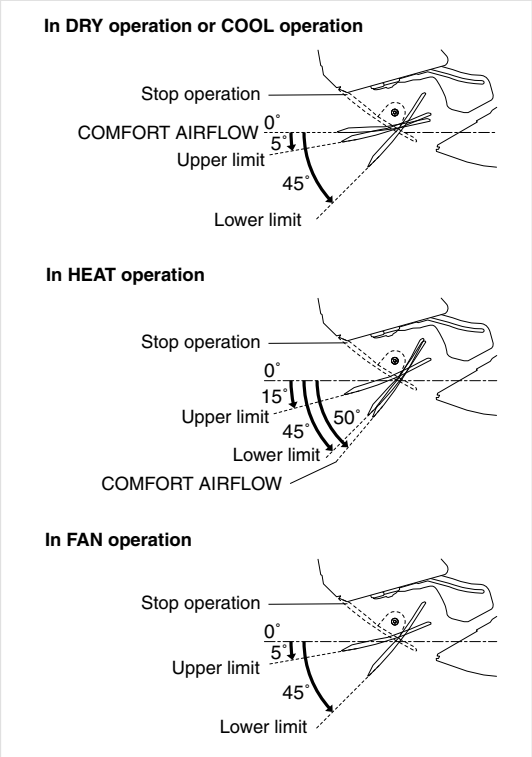

12

2.4 COMFORT AIRFLOW Operation

COMFORT AIRFLOW Operation

The flow of air will be in the upward direction while in COOL operation and in the downward direction while in HEAT operation, which will provide a comfortable wind that will not come in direct contact with people.

■ To start COMFORT AIRFLOW operation

1. Press COMFORT .

- The flap position will change, preventing air from blowing directly on the occupants of the room.
- " " is displayed on the LCD.
- Airflow rate is set to Auto.

COOL/DRY: The flap will go up.
HEAT: The flap will go down.

■ To cancel COMFORT AIRFLOW operation

2. Press COMFORT again.

- The flap will return to the memory position from before COMFORT AIRFLOW mode.
- " " disappears from the LCD.

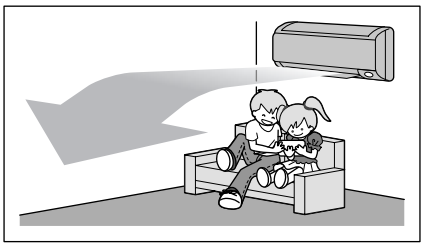

COOL operation

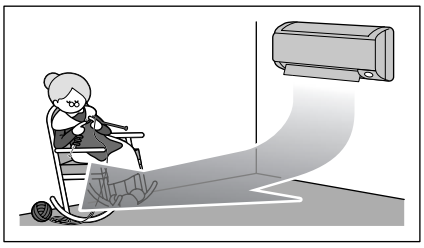

HEAT operation

NOTE

■ Notes on COMFORT AIRFLOW operation

- The flap position will change, preventing air from blowing directly on the occupants of the room.
- POWERFUL operation and COMFORT AIRFLOW operation cannot be used at the same time.
  Priority is given to the function of whichever button is pressed last.
- The airflow rate will be set to Auto. If the upper and lower airflow direction is selected, the COMFORT AIRFLOW operation will be canceled.

13

2.5 POWERFUL Operation

POWERFUL Operation

POWERFUL operation quickly maximises the cooling (heating) effect in any operation mode. You can get the maximum capacity.

■ To start POWERFUL operation

1. Press POWERFUL.

- POWERFUL operation ends in 20 minutes. Then the system automatically operates again with the previous settings which were used before POWERFUL operation.
- " " is displayed on the LCD.

■ To cancel POWERFUL operation

2. Press POWERFUL again.

- " " is displayed on the LCD.

NOTE

■ Notes on POWERFUL operation

- When using POWERFUL operation, there are some functions which are not available.
- POWERFUL operation cannot be used together with ECONO or COMFORT AIRFLOW operation.
  Priority is given to the function of whichever button is pressed last.
- POWERFUL operation can only be set when the unit is running.
- POWERFUL operation will not increase the capacity of the air conditioner if the air conditioner is already in operation with its maximum capacity demonstrated.
- **In COOL, HEAT and Auto operation**
  To maximise the cooling (heating) effect, the capacity of outdoor unit is increased and the airflow rate is fixed to the maximum setting.
  The temperature and airflow settings are not variable.
- **In DRY operation**
  The temperature setting is lowered by 2.5˚C and the airflow rate is slightly increased.
- **In FAN operation**
  The airflow rate is fixed to the maximum setting.

14

2.6 ECONO Operation

ECONO Operation

ECONO operation is a function which enables efficient operation by limiting the maximum power consumption value.
This function is useful for cases in which attention should be paid to ensure a circuit breaker will not trip when the product runs alongside other appliances.

■ To start ECONO operation

1. Press ECONO .

- " " is displayed on the LCD.

■ To cancel ECONO operation

2. Press ECONO again.

- " " disappears from the LCD.

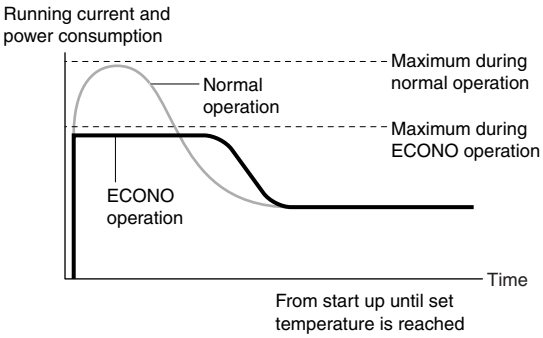

- This diagram is a representation for illustrative purposes only.

* The maximum running current and power consumption of the air conditioner in ECONO operation vary with the connecting outdoor unit.

NOTE

■Notes on ECONO operation

- ECONO operation can only be set when the unit is running.
- ECONO operation is a function which enables efficient operation by limiting the power consumption of the outdoor unit (operating frequency).
- ECONO operation functions in AUTO, COOL, DRY and HEAT operation.
- POWERFUL and ECONO operation cannot be used at the same time. Priority is given to the function of whichever button is pressed last.
- If the level of power consumption is already low, ECONO operation will not drop the power consumption.

15

2.7 OFF TIMER Operation

OFF TIMER Operation

Timer functions are useful for automatically switching the air conditioner on or off at night or in the morning. You can also use OFF TIMER and ON TIMER in combination.

■ To use OFF TIMER operation

1. Press OFF .

" HR. OFF " is displayed on the LCD.

Each pressing of OFF advances the time setting by 1 hour.
The time can be set between 1 to 9 hours.
- The TIMER lamp lights up.

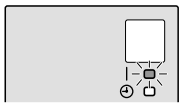

■ To cancel OFF TIMER operation

2. Press CANCEL .

- " HR. OFF " disappears from the LCD.
- The TIMER lamp goes off.

NOTE

■ Notes on TIMER operation
- Once you set ON/OFF TIMER the time setting is kept in the memory. The memory is canceled when remote controller batteries are replaced.

■ NIGHT SET mode
- When the OFF TIMER is set, the air conditioner automatically adjusts the temperature setting (0.5˚C up in COOL, 2.0˚C down in HEAT) to prevent excessive cooling (heating) for your pleasant sleep.

16

2.8 ON TIMER Operation

ON TIMER Operation

■ To use ON TIMER operation

1. Press ON.

" HR. ON " is displayed on the LCD.

Each pressing of ON advances the time setting by 1 hour.
The time can be set between 1 to 12 hours.

- The TIMER lamp lights up.

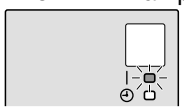

■ To cancel ON TIMER operation

2. Press CANCEL.

- " HR. ON " disappears from the LCD.
- The TIMER lamp goes off.

■ To combine ON TIMER and OFF TIMER

- A sample setting for combining the 2 timers is shown below.
- " ON " and " OFF " are displayed on the LCD.

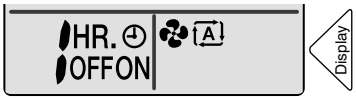

NOTE

■ In the following cases, set the timer again.

- After a breaker has turned off.
- After a power failure.
- After replacing batteries in the remote controller.

17

3P272441-5A

Part 6
Service Diagnosis

1. Troubleshooting with LED 48
   1.1 Indoor Unit 48
   1.2 Outdoor Unit 48
2. Problem Symptoms and Measures 49
3. Service Check Function 50
4. Troubleshooting 53
   4.1 Error Codes and Description 53
   4.2 Indoor Unit PCB Abnormality 54
   4.3 Freeze-up Protection Control or Heating Peak-cut Control 55
   4.4 Fan Motor (AC Motor) or Related Abnormality 57
   4.5 Thermistor or Related Abnormality (Indoor Unit) 59
   4.6 Signal Transmission Error (between Indoor Unit and Outdoor Unit) 60
   4.7 Unspecified Voltage (between Indoor Unit and Outdoor Unit) 62
   4.8 Outdoor Unit PCB Abnormality 63
   4.9 OL Activation (Compressor Overload) 64
   4.10 Compressor Lock 65
   4.11 Input Overcurrent Detection 66
   4.12 Four Way Valve Abnormality 67
   4.13 Discharge Pipe Temperature Control 69
   4.14 High Pressure Control in Cooling 70
   4.15 Compressor System Sensor Abnormality 71
   4.16 Position Sensor Abnormality 72
   4.17 DC Voltage / Current Sensor Abnormality 74
   4.18 Thermistor or Related Abnormality (Outdoor Unit) 75
   4.19 Electrical Box Temperature Rise 77
   4.20 Radiation Fin Temperature Rise 79
   4.21 Output Overcurrent Detection 81
   4.22 Refrigerant Shortage 83
   4.23 Low-voltage Detection or Over-voltage Detection 85
5. Check 87
   5.1 Thermistor Resistance Check 87
   5.2 Hall IC Check 88
   5.3 Power Supply Waveforms Check 88
   5.4 Electronic Expansion Valve Check 89
   5.5 Four Way Valve Performance Check 90
   5.6 Inverter Unit Refrigerant System Check 90
   5.7 “Inverter Checker” Check 91
   5.8 Installation Condition Check 92
   5.9 Discharge Pressure Check 93
   5.10 Outdoor Fan System Check 93
   5.11 Main Circuit Short Check 94
   5.12 Power Module Check 94

1. Troubleshooting with LED

1.1 Indoor Unit

Operation Lamp

The operation lamp blinks when any of the following errors is detected.

1. When a protection device of the indoor or outdoor unit is activated, or when the thermistor malfunctions.
2. When a signal transmission error occurs between the indoor and outdoor units.

In either case, conduct the diagnostic procedure described in the following pages.

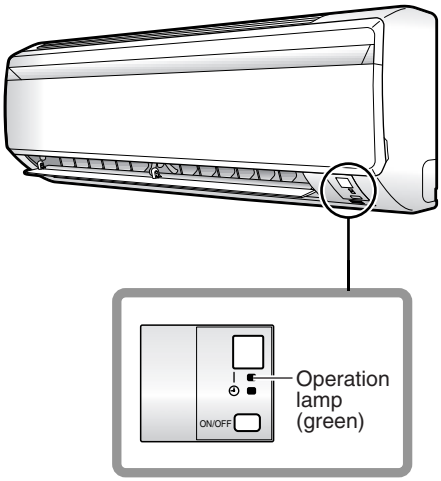

(R14845)

Service Monitor

The indoor unit has one green LED (LED A) on the control PCB. When the microcomputer works in order, the LED A blinks.

1.2 Outdoor Unit

The outdoor unit has one green LED (LED A) on the main PCB. When the microcomputer works in order, the LED A blinks.

2. Problem Symptoms and Measures

Symptom	Check Item	Details of Measure	Reference Page
The unit does not operate.	Check the power supply.	Check if the rated voltage is supplied.	—
	Check the type of the indoor unit.	Check if the indoor unit type is compatible with the outdoor unit.	—
	Check the outdoor temperature.	Heating operation cannot be used when the outdoor temperature is 24°C or higher, and cooling operation cannot be used when the outdoor temperature is below 10°C.	—
	Diagnose with remote controller indication.	—	53
	Check the remote controller addresses.	Check if address settings for the remote controller and indoor unit are correct.	140
Operation sometimes stops.	Check the power supply.	A power failure of 2 to 10 cycles stops air conditioner operation. (Operation lamp OFF)	—
	Check the outdoor temperature.	Heating operation cannot be used when the outdoor temperature is 24°C or higher, and cooling operation cannot be used when the outdoor temperature is below 10°C.	—
	Diagnose with remote controller indication.	—	53
The unit operates but does not cool, or does not heat.	Check for wiring and piping errors in the connection between the indoor unit and outdoor unit.	—	—
	Check for thermistor detection errors.	Check if the thermistor is mounted securely.	—
	Check for faulty operation of the electronic expansion valve.	Set the unit to cooling operation, and check the temperature of the liquid pipe to see if the electronic expansion valve works.	—
	Diagnose with remote controller indication.	—	53
	Diagnose by service port pressure and operating current.	Check for refrigerant shortage.	83
Large operating noise and vibrations	Check the output voltage of the power module.	—	94
	Check the power module.	—	—
	Check the installation condition.	Check if the required spaces for installation (specified in the installation manual) are provided.	—

3. Service Check Function

Check Method 1

1. When the timer cancel button is held down for 5 seconds, 00 indication is displayed on the temperature display screen.

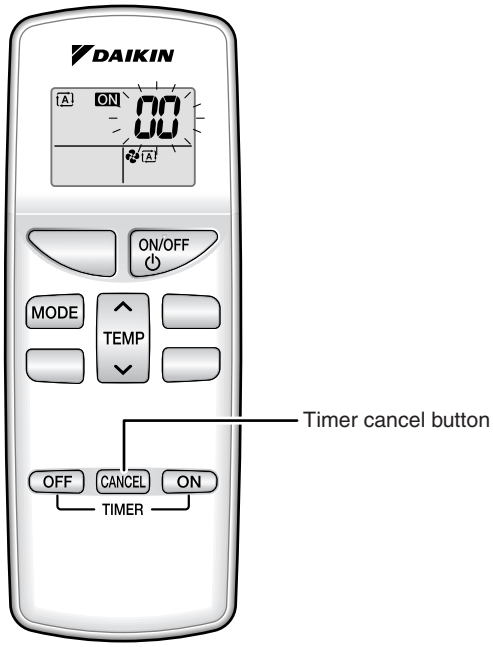

<ARC470 Series> (R14571)

2. Press the timer cancel button repeatedly until a long beep sounds.

■ The code indication changes in the sequence shown below.

No.	Code	No.	Code	No.	Code
1	00	13	C7	25	UA
2	U4	14	A3	26	UH
3	L5	15	H8	27	P4
4	E6	16	H9	28	L3
5	H6	17	C9	29	L4
6	H0	18	C4	30	H7
7	A6	19	C5	31	U2
8	E7	20	J3	32	EA
9	U0	21	J6	33	AH
10	F3	22	E5	34	FA
11	A5	23	A1	35	H1
12	F6	24	E1	36	P9

Note:

1. A short beep or two consecutive beeps indicate non-corresponding codes.
2. To return to the normal mode, hold the timer cancel button down for 5 seconds. When the remote controller is left untouched for 60 seconds, it also returns to the normal mode.
3. Not all the error codes are displayed. When you cannot find the error code, try the check method 2. (→ Refer to page 51.)

Check Method 2

1. Press the center of the [TEMP] button and the [MODE] button at the same time to enter the diagnosis mode.

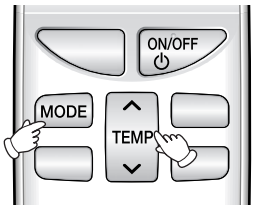

(R14572)

The left-side number blinks.

(R14269)

2. Press the [TEMP] ∧ or ∨ button and change the number until you hear the two consecutive beeps or the long beep.

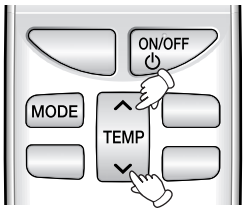

(R14573)

3. Diagnose by the sound.
   ★beep : The left-side number does not correspond with the error code.
   ★two consecutive beeps : The left-side number corresponds with the error code but the right-side number does not.
   ★long beep : Both the left-side and right-side numbers correspond with the error code. The numbers indicated when you hear the long beep are the error code. (Error codes and description → Refer to page 53.)

4. Press the [MODE] button.

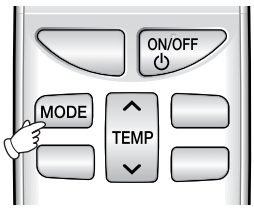

(R14574)

The right-side number blinks.

(R14272)

5. Press the [TEMP] ∧ or ∨ button and change the number until you hear the long beep.

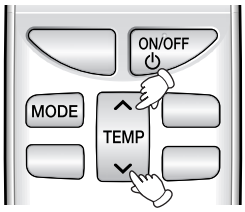

(R14573)

6. Diagnose by the sound.
   ★beep : The left-side number does not correspond with the error code.
   ★two consecutive beeps : The left-side number corresponds with the error code but the right-side number does not.
   ★long beep : Both the left-side and right-side numbers correspond with the error code.

7. Determine the error code.
   The numbers indicated when you hear the long beep are the error code.
   (Error codes and description → Refer to page 53.)

8. Press the [MODE] button to exit from the diagnosis mode.

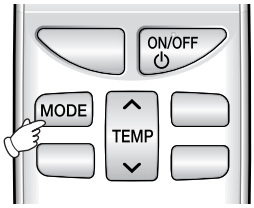

(R14574)

The display 7 means the trial operation mode.
(Refer to page 139 for trial operation.)

(R14275)

9. Press the [ON/OFF] button twice to return to the normal mode.

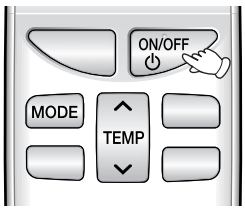

(R14575)

Note: When the remote controller is left untouched for 60 seconds, it returns to the normal mode.

4. Troubleshooting

4.1 Error Codes and Description

	Error Codes	Description	Reference Page
System	00	Normal	—
	U0★	Refrigerant shortage	83
	U2	Low-voltage detection or over-voltage detection	85
	U4	Signal transmission error (between indoor unit and outdoor unit)	60
	UA	Unspecified voltage (between indoor unit and outdoor unit)	62
Indoor Unit	A1	Indoor unit PCB abnormality	54
	A5	Freeze-up protection control or heating peak-cut control	55
	A6	Fan motor (AC motor) or related abnormality	57
	C4	Indoor heat exchanger thermistor or related abnormality	59
	C9	Room temperature thermistor or related abnormality	59
Outdoor Unit	E1	Outdoor unit PCB abnormality	63
	E5★	OL activation (compressor overload)	64
	E6★	Compressor lock	65
	E8	Input overcurrent detection	66
	EA	Four way valve abnormality	67
	F3	Discharge pipe temperature control	69
	F6	High pressure control in cooling	70
	H0	Compressor system sensor abnormality	71
	H6	Position sensor abnormality	72
	H8	DC voltage / current sensor abnormality	74
	H9	Outdoor temperature thermistor or related abnormality	75
	J3★	Discharge pipe thermistor or related abnormality	75
	J6	Outdoor heat exchanger thermistor or related abnormality	75
	L3	Electrical box temperature rise	77
	L4	Radiation fin temperature rise	79
	L5★	Output overcurrent detection	81
	P4	Radiation fin thermistor or related abnormality	75

★: Displayed only when system-down occurs.

4.2 Indoor Unit PCB Abnormality

Remote Controller Display

A1

Method of Malfunction Detection

The system checks if the circuit works properly within the microcomputer of the indoor unit.

Malfunction Decision Conditions

The system cannot set the internal settings.

Supposed Causes

- Wrong models interconnected
- Defective indoor unit PCB
- Disconnection of connector

Troubleshooting

Caution Be sure to turn off the power switch before connecting or disconnecting connectors, or parts may be damaged.

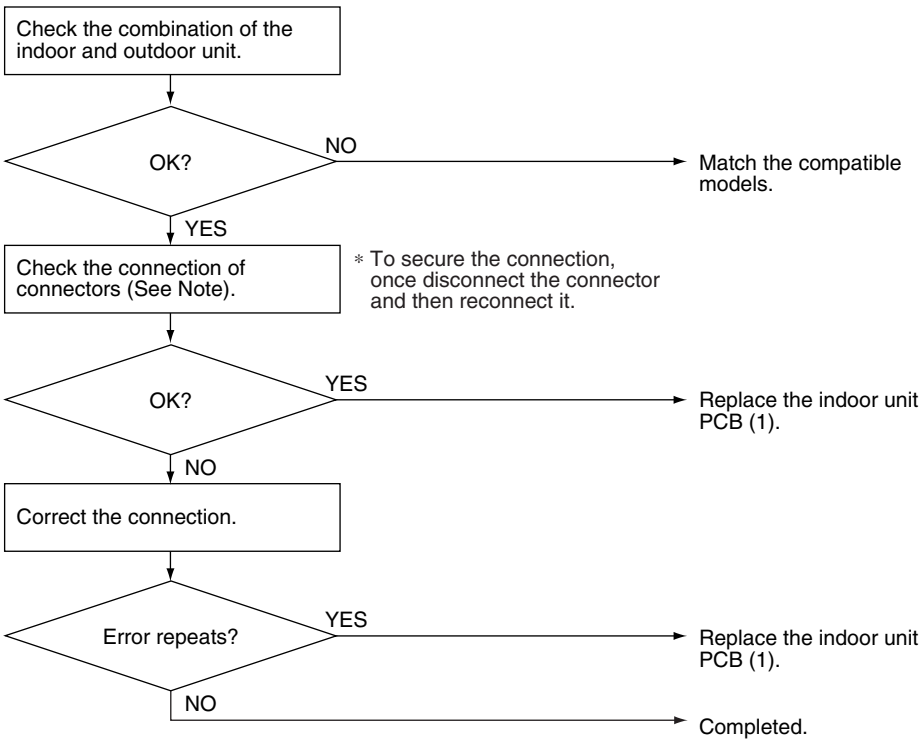

(R15285)

Note: Check the following connector.

Model Type	Connector
Wall Mounted Type	Terminal board ~ Control PCB

4.3 Freeze-up Protection Control or Heating Peak-cut Control

Remote Controller Display

A5

Method of Malfunction Detection

- Freeze-up protection control
  During cooling operation, the freeze-up protection control (operation halt) is activated according to the temperature detected by the indoor heat exchanger thermistor.
- Heating peak-cut control
  During heating operation, the temperature detected by the indoor heat exchanger thermistor is used for the heating peak-cut control (operation halt, outdoor fan stop, etc.)

Malfunction Decision Conditions

- Freeze-up protection control
  During cooling operation, the indoor heat exchanger temperature is below 0°C.
- Heating peak-cut control
  During heating operation, the indoor heat exchanger temperature is above 65°C.

Supposed Causes

- Short-circuited air
- Clogged air filter of the indoor unit
- Dust accumulation on the indoor heat exchanger
- Defective indoor heat exchanger thermistor
- Defective indoor unit PCB

Troubleshooting

Check No.01
Refer to P.87

Caution Be sure to turn off the power switch before connecting or disconnecting connectors, or parts may be damaged.

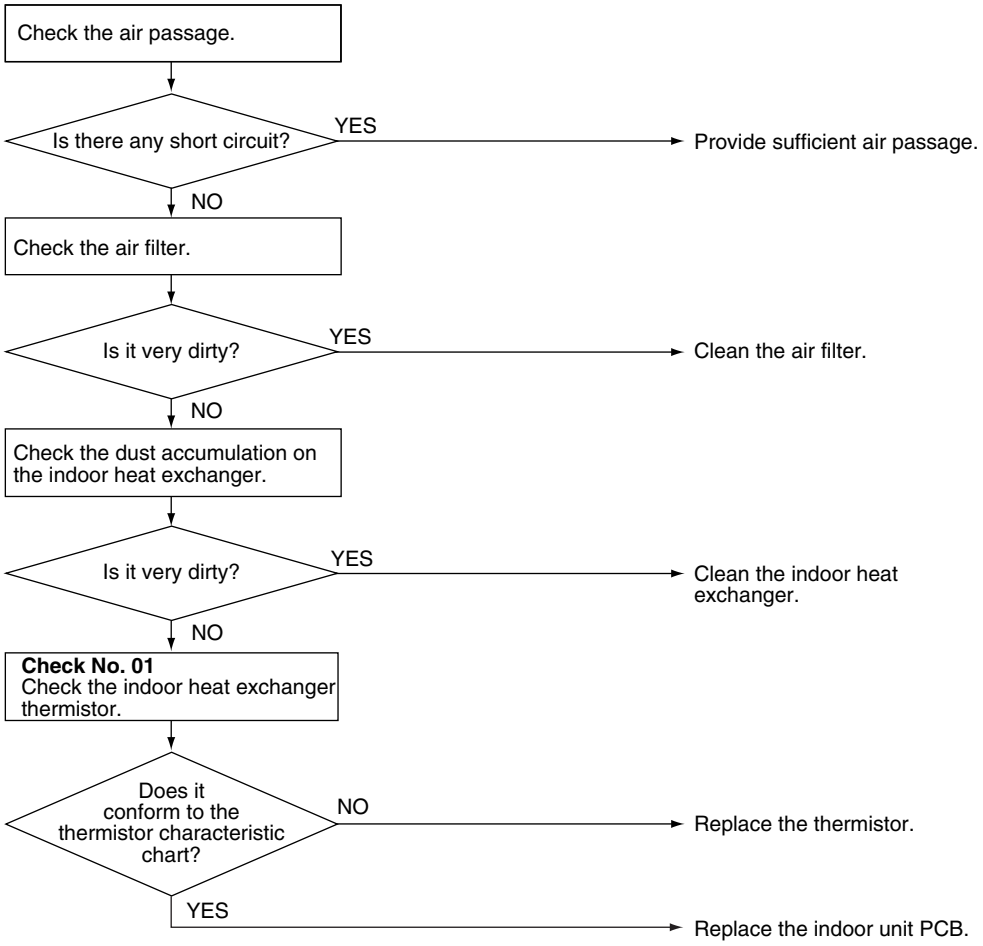

(R14402)

4.4 Fan Motor (AC Motor) or Related Abnormality

Remote Controller Display

A6

Method of Malfunction Detection

The rotation speed detected by the Hall IC during fan motor operation is used to determine abnormal fan motor operation.

Malfunction Decision Conditions

The detected rotation speed does not reach the demanded rotation speed of the target tap, and is less than 50% of the maximum fan motor rotation speed.

Supposed Causes

- Reduction of power supply voltage
- Layer short inside the fan motor winding
- Breaking of wire inside the fan motor
- Breaking of the fan motor lead wires
- Defective capacitor of the fan motor
- Defective indoor unit PCB

Troubleshooting

Check No.04
Refer to P.88

Caution Be sure to turn off the power switch before connecting or disconnecting connectors, or parts may be damaged.

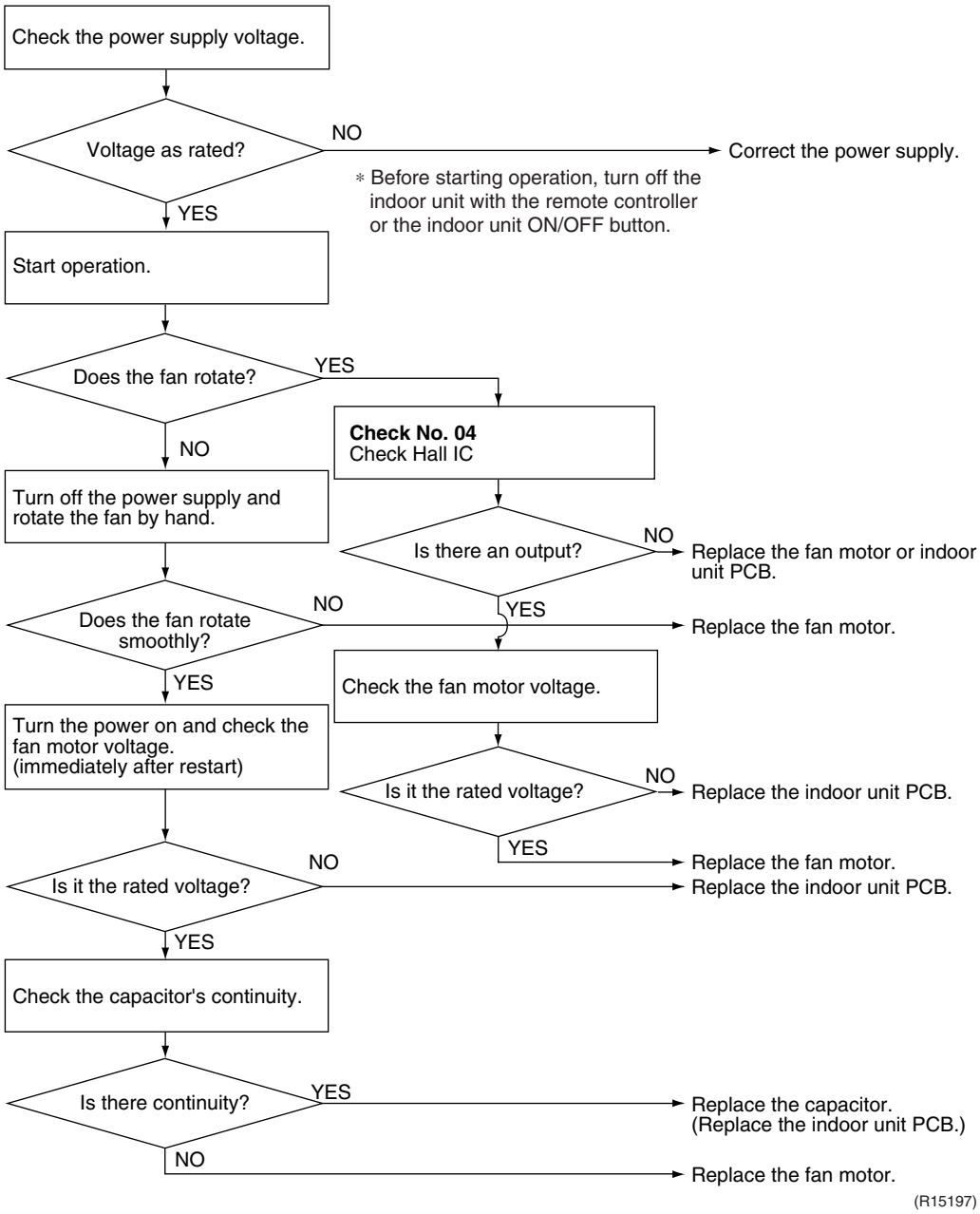

4.5 Thermistor or Related Abnormality (Indoor Unit)

Remote Controller Display

C4, C9

Method of Malfunction Detection

The temperatures detected by the thermistors determine thermistor errors.

Malfunction Decision Conditions

The thermistor input is more than 4.96 V or less than 0.04 V during compressor operation.

Supposed Causes

- Disconnection of connector
- Defective thermistor
- Defective indoor unit PCB

Troubleshooting

Check No.01
Refer to P.87

Caution Be sure to turn off the power switch before connecting or disconnecting connectors, or parts may be damaged.

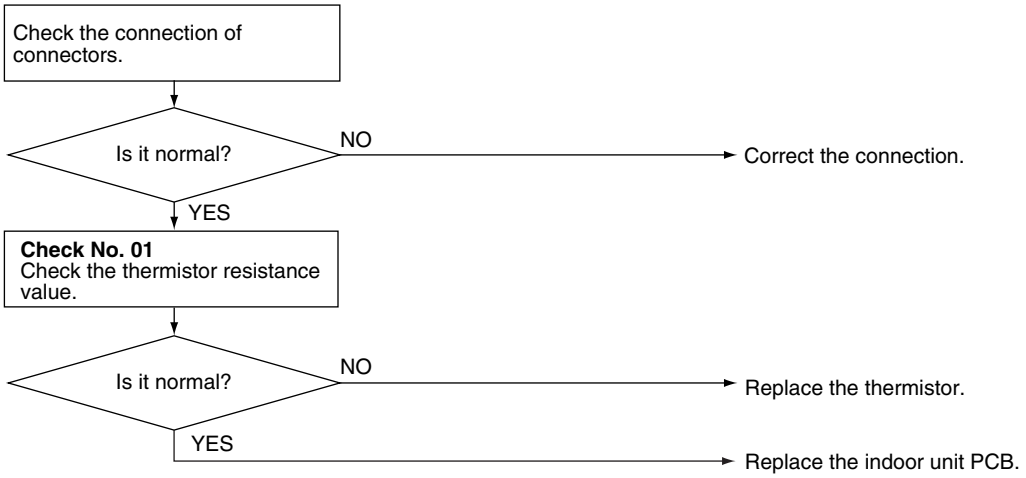

(R14406)

C4 : Indoor heat exchanger thermistor
C9 : Room temperature thermistor

4.6 Signal Transmission Error (between Indoor Unit and Outdoor Unit)

Remote Controller Display

U4

Method of Malfunction Detection

The data received from the outdoor unit in indoor unit - outdoor unit signal transmission is checked whether it is normal.

Malfunction Decision Conditions

The data sent from the outdoor unit cannot be received normally, or the content of the data is abnormal.

Supposed Causes

- Reduction of power supply voltage
- Wiring error
- Breaking of the connection wires between the indoor and outdoor units (wire No. 3)
- Defective outdoor unit PCB
- Defective indoor unit PCB
- Disturbed power supply waveform

Troubleshooting

Check No.11
Refer to P.88

Caution Be sure to turn off the power switch before connecting or disconnecting connectors, or parts may be damaged.

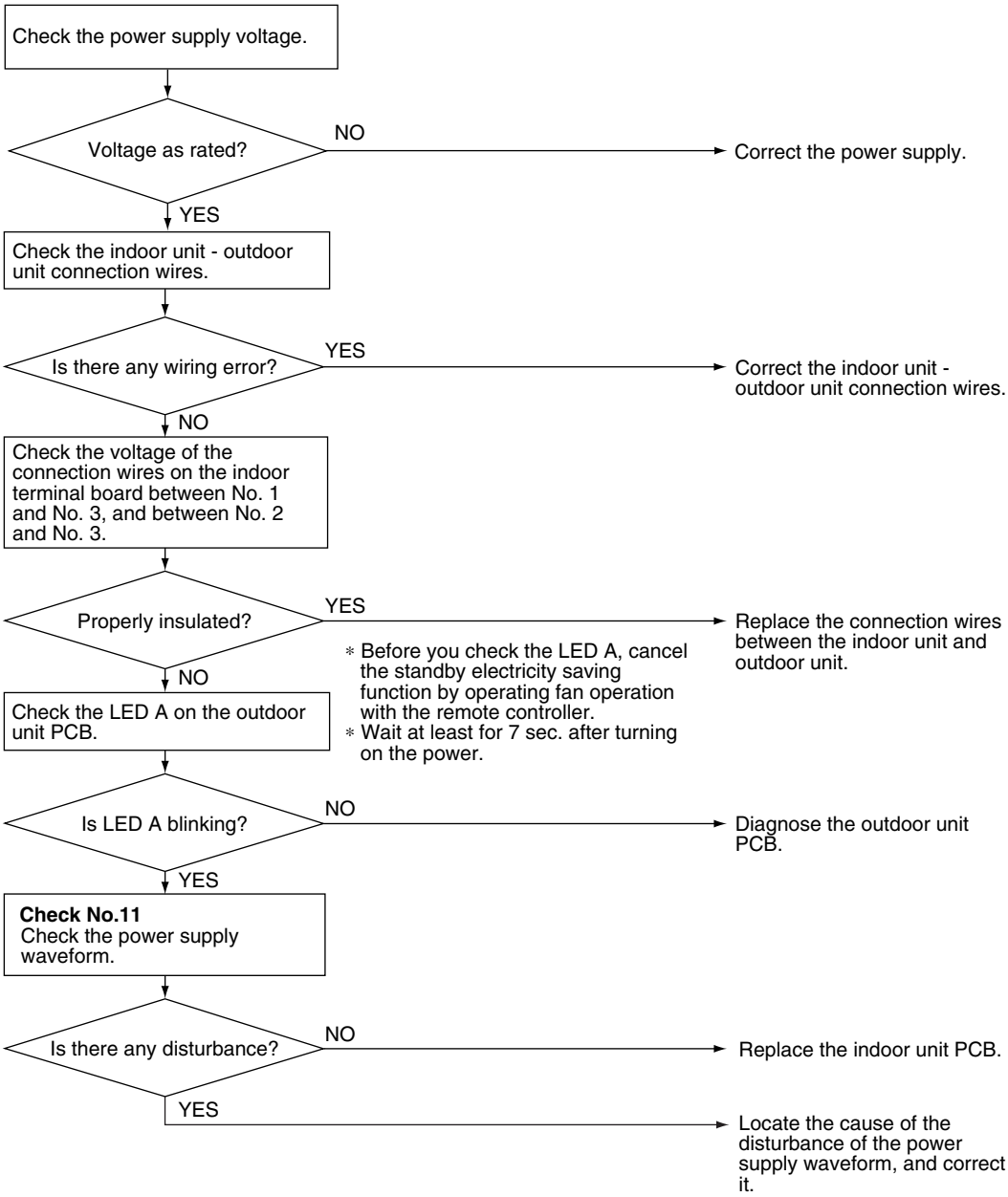

4.7 Unspecified Voltage (between Indoor Unit and Outdoor Unit)

Remote Controller Display

U9

Method of Malfunction Detection

The supply power is detected for its requirements (different from pair type and multi type models) by the indoor / outdoor transmission signal.

Malfunction Decision Conditions

Pair type and multi type models are interconnected.

Supposed Causes

- Wrong models interconnected
- Wrong wiring of connecting wires
- Wrong indoor unit PCB or outdoor unit PCB mounted
- Defective indoor unit PCB
- Defective outdoor unit PCB

Troubleshooting

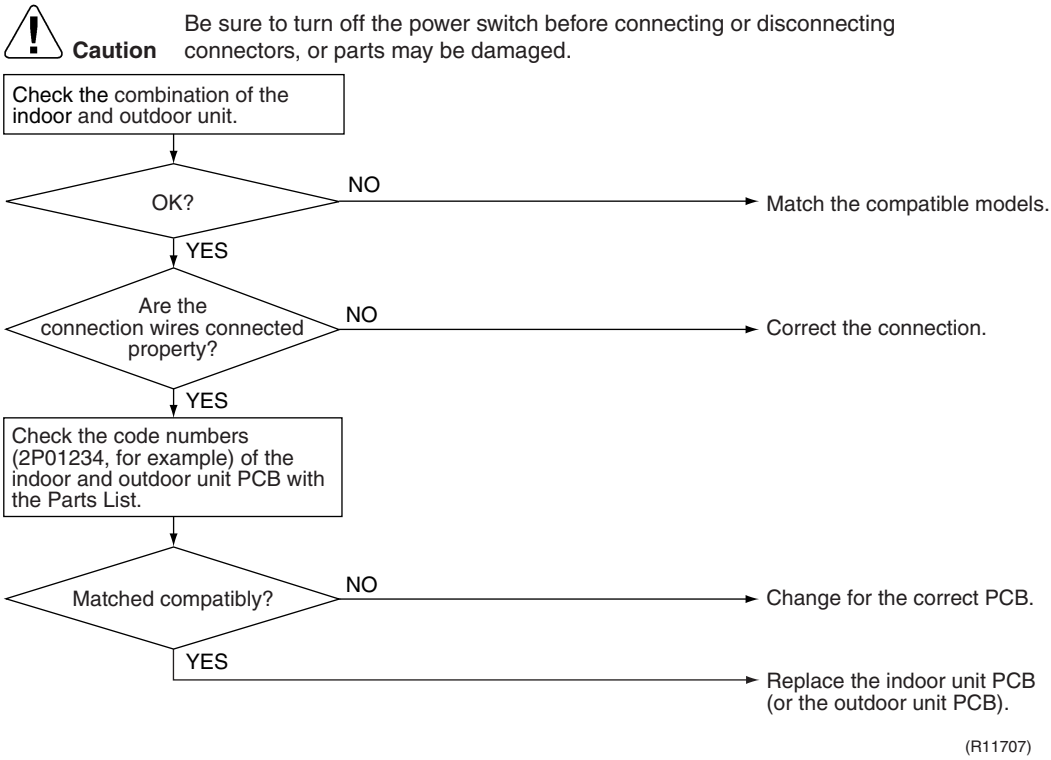

4.8 Outdoor Unit PCB Abnormality

Remote Controller Display

E1

Method of Malfunction Detection

- The system checks to see if the IPM works in order.
- The system checks to see if the zero-cross signal comes in properly.

Malfunction Decision Conditions

- The IPM sends no signal.
- The zero-cross signal is not detected.

Supposed Causes

- Defective outdoor unit PCB
- Broken harness between PCBs
- Noise
- Momentary fall of voltage
- Momentary power failure

Troubleshooting

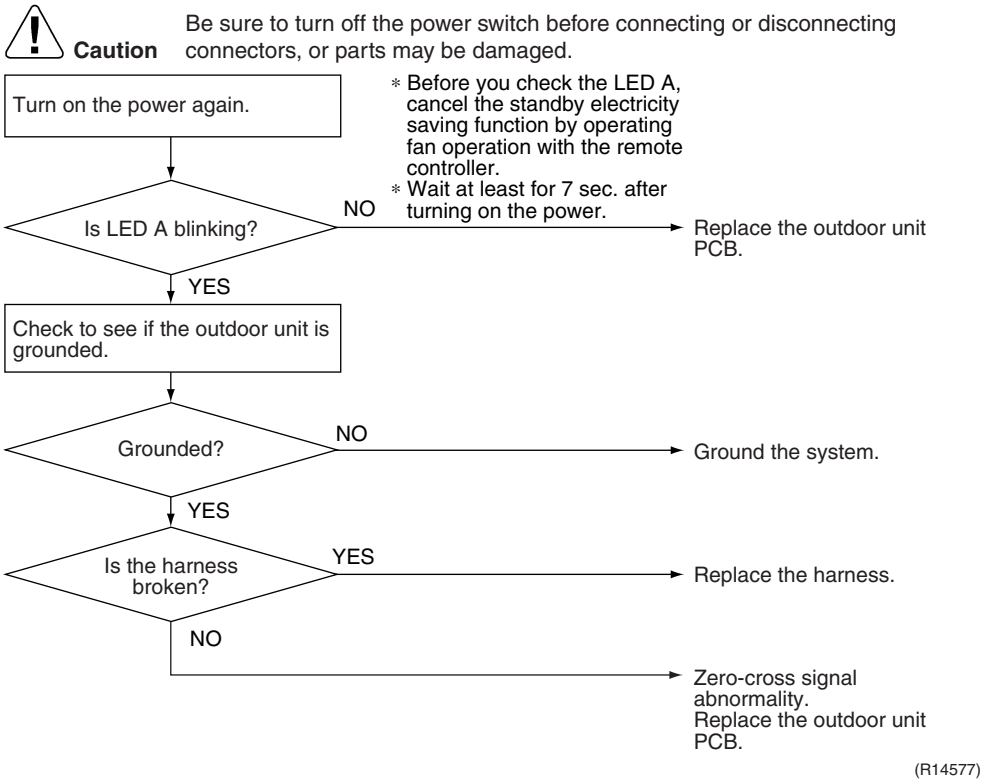

4.9 OL Activation (Compressor Overload)

Remote Controller Display

E5

Method of Malfunction Detection

A compressor overload is detected through compressor OL.

Malfunction Decision Conditions

- If the error repeats, the system is shut down.
- Reset condition: Continuous run for about 60 minutes without any other error

∗ The operating temperature condition is not specified.

Supposed Causes

- Defective discharge pipe thermistor
- Defective electronic expansion valve or coil
- Defective four way valve or coil
- Defective outdoor unit PCB
- Refrigerant shortage
- Water mixed in refrigerant
- Defective stop valve

Troubleshooting

Check No.01 Refer to P.87
Check No.12 Refer to P.89
Check No.13 Refer to P.90
Check No.14 Refer to P.90

Caution Be sure to turn off the power switch before connecting or disconnecting connectors, or parts may be damaged.

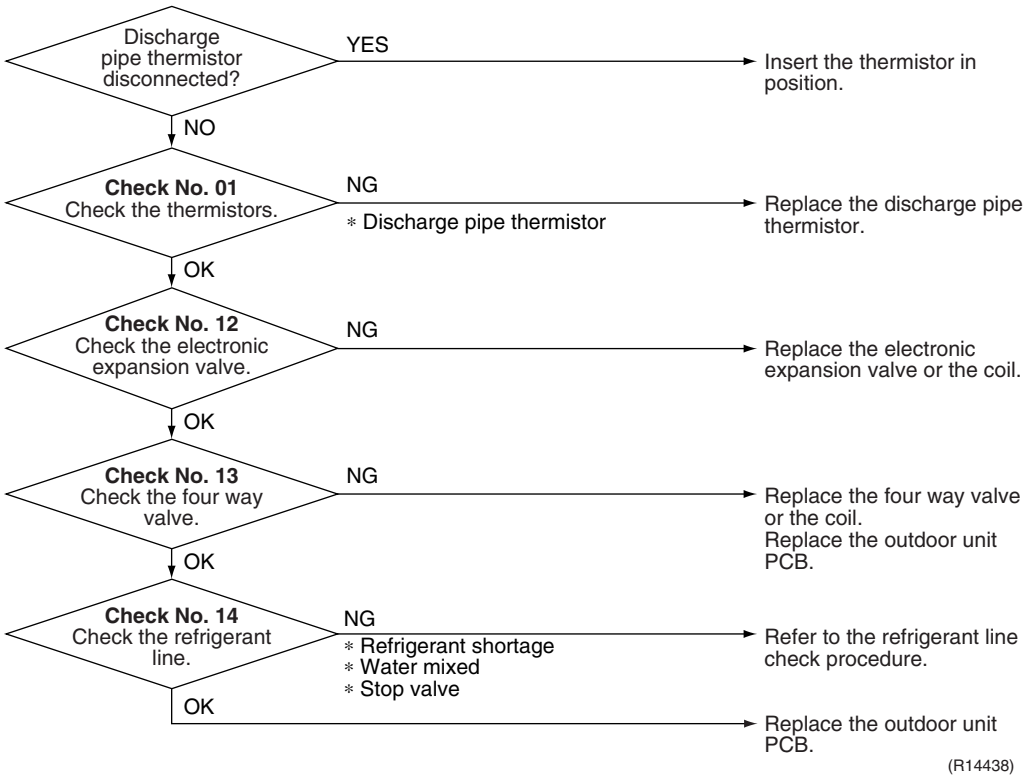

4.10 Compressor Lock

Remote Controller Display

E6

Method of Malfunction Detection

A compressor lock is detected by the current waveform generated when applying high-frequency voltage to the motor.

Malfunction Decision Conditions

- If the error repeats, the system is shut down.
- Reset condition: Continuous run for about 11 minutes without any other error

Supposed Causes

- Compressor locked
- Disconnection of compressor harness

Troubleshooting

Check No.15
Refer to P.91

Caution Be sure to turn off the power switch before connecting or disconnecting connectors, or parts may be damaged.
(Precaution before turning on the power again)
Make sure the power has been off for at least 30 seconds.

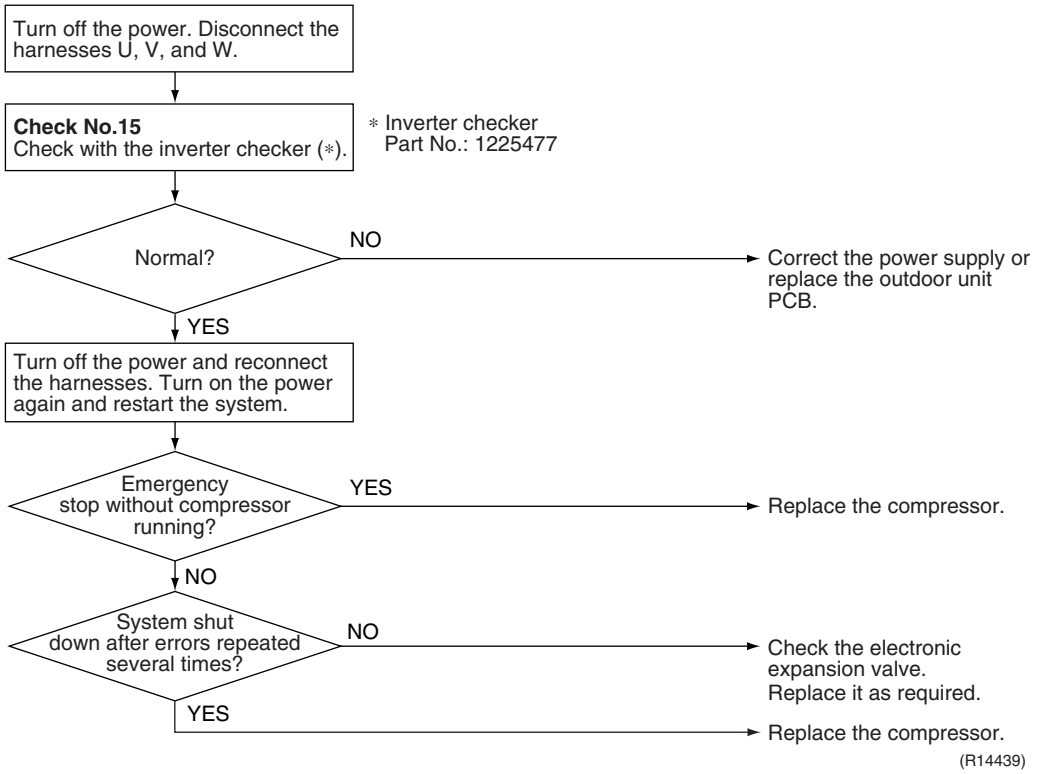

4.11 Input Overcurrent Detection

Remote Controller Display

E8

Method of Malfunction Detection

An input overcurrent is detected by checking the input current value with the compressor running.

Malfunction Decision Conditions

- The current exceeds about 8.5 ~ 10.5 A for 2.5 seconds with the compressor running. (The upper limit of the current decreases when the outdoor temperature exceeds a certain level.)

Supposed Causes

- Defective compressor
- Defective outdoor unit PCB
- Short circuit

Troubleshooting

Check No.15 Refer to P.91

Check No.17 Refer to P.92

Check No.18 Refer to P.93

Caution Be sure to turn off the power switch before connecting or disconnecting connectors, or parts may be damaged.

∗ An input overcurrent may result from wrong internal wiring. If the system is interrupted by an input overcurrent after the wires have been disconnected and reconnected for part replacement, check the wiring again.

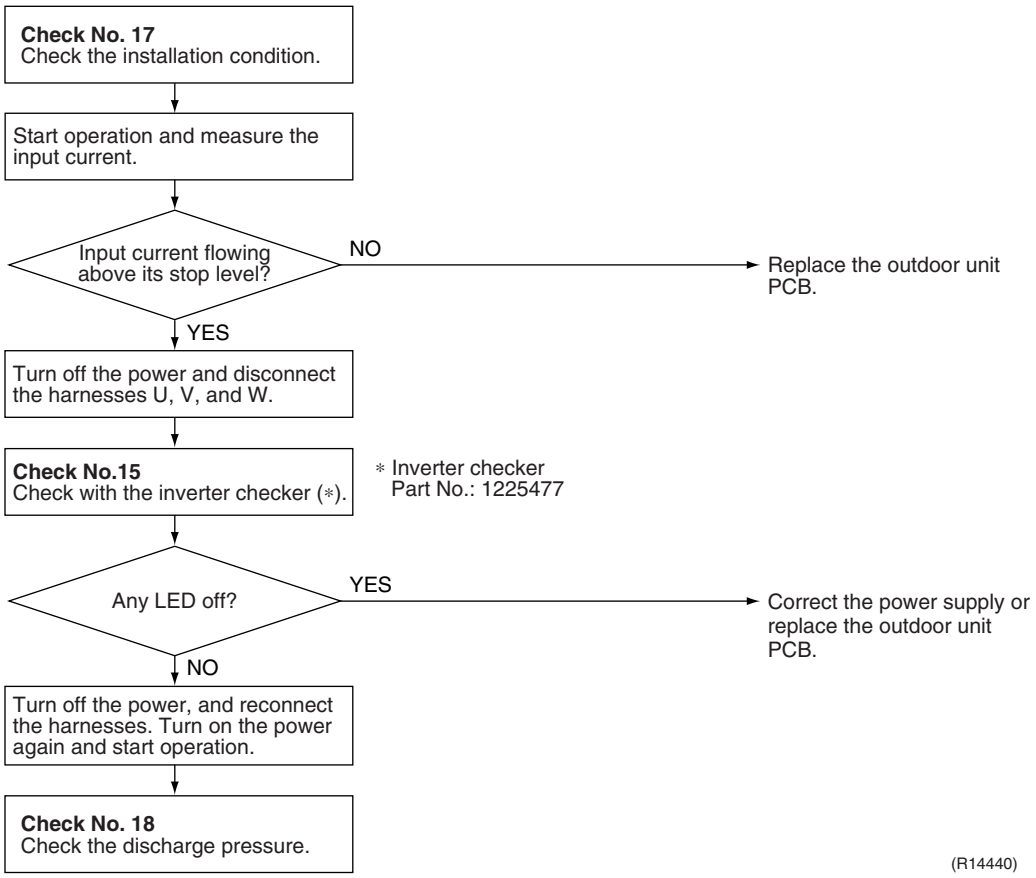

(R14440)

4.12 Four Way Valve Abnormality

Remote Controller Display

EA

Method of Malfunction Detection

The room temperature thermistor, the indoor heat exchanger thermistor, the outdoor temperature thermistor, and the outdoor heat exchanger thermistor are checked if they function within their normal ranges in each operation mode.

Malfunction Decision Conditions

A following condition continues over 10 minutes after operating for 5 minutes.

- Cooling / Dry
  (room thermistor temp. – indoor heat exchanger temp.) < –5°C
- Heating
  (indoor heat exchanger temp. – room thermistor temp.) < –5°C

- If the error repeats, the system is shut down.
- Reset condition: Continuous run for about 60 minutes without any other error

Supposed Causes

- Disconnection of four way valve coil
- Defective four way valve, coil, or harness
- Defective outdoor unit PCB
- Defective thermistor
- Refrigerant shortage
- Water mixed in refrigerant
- Defective stop valve

Troubleshooting

Check No.01
Refer to P.87

Check No.13
Refer to P.90

Check No.14
Refer to P.90

Caution Be sure to turn off the power switch before connecting or disconnecting connectors, or parts may be damaged.

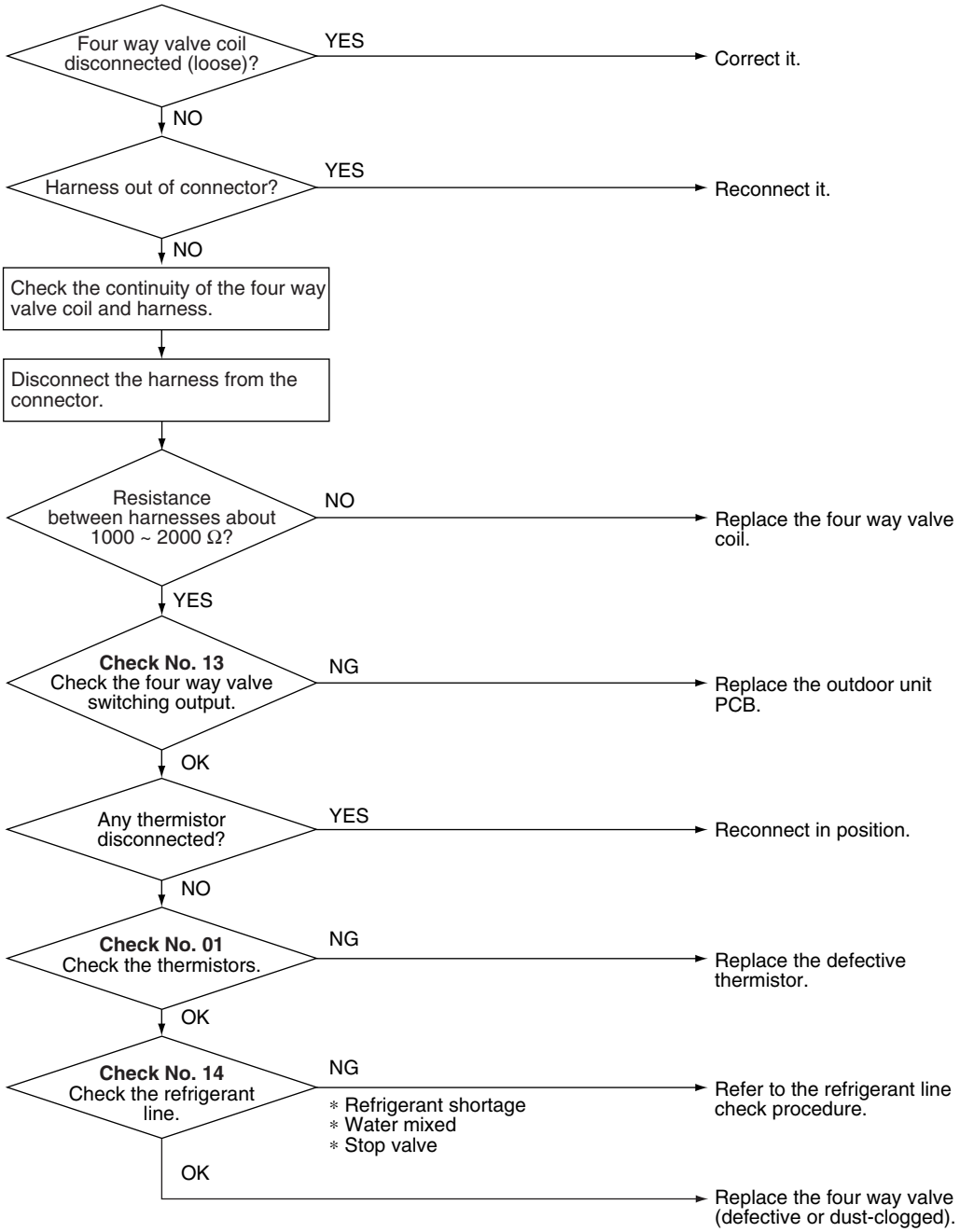

(R14441)

4.13 Discharge Pipe Temperature Control

Remote Controller Display

F3

Method of Malfunction Detection

An error is determined with the temperature detected by the discharge pipe thermistor.

Malfunction Decision Conditions

- If the temperature detected by the discharge pipe thermistor rises above **A** °C, the compressor stops.
- The error is cleared when the discharge pipe temperature has dropped below **B** °C.

Stop temperatures	**A** (°C)	**B** (°C)
(1) above 50 Hz (rising), above 45 Hz (dropping)	110	97
(2) 35 ~ 50 Hz (rising), 30 ~ 45 Hz (dropping)	105	92
(3) below 35 Hz (rising), below 30 Hz (dropping)	95	82

- If the error repeats, the system is shut down.
- Reset condition: Continuous run for about 60 minutes without any other error

Supposed Causes

- Defective discharge pipe thermistor
  (Defective outdoor heat exchanger thermistor or outdoor temperature thermistor)
- Defective electronic expansion valve or coil
- Refrigerant shortage
- Defective four way valve
- Water mixed in refrigerant
- Defective stop valve
- Defective outdoor unit PCB

Troubleshooting

Check No.01
Refer to P.87

Check No.12
Refer to P.89

Check No.14
Refer to P.90

Caution Be sure to turn off the power switch before connecting or disconnecting connectors, or parts may be damaged.

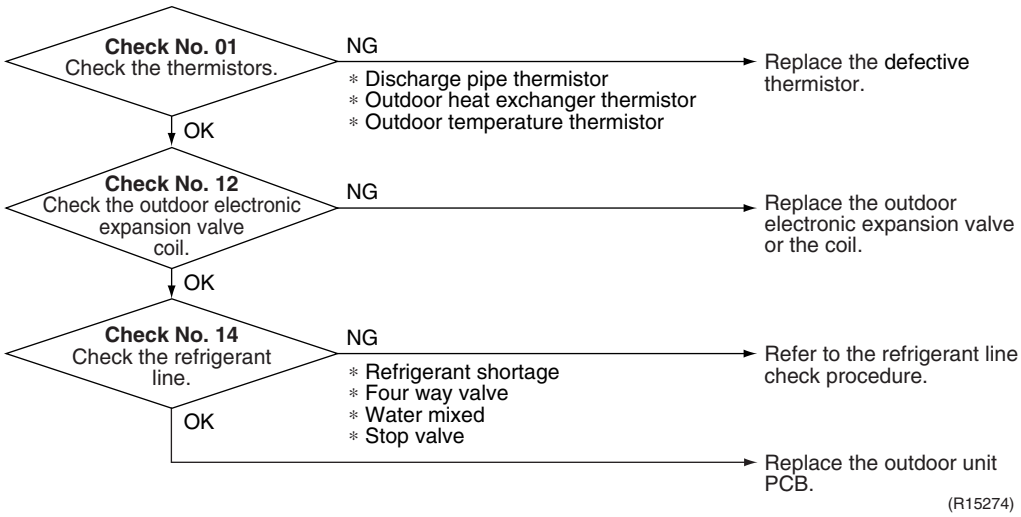

(R15274)

4.14 High Pressure Control in Cooling

Remote Controller Display

F6

Method of Malfunction Detection

High-pressure control (operation halt, frequency drop, etc.) is activated in cooling operation if the temperature sensed by the outdoor heat exchanger thermistor exceeds the limit.

Malfunction Decision Conditions

- The temperature sensed by the outdoor heat exchanger thermistor rises above about 60°C.
- The error is cleared when the temperature drops below about 50°C.

Supposed Causes

- The installation space is not large enough.
- Dirty outdoor heat exchanger
- Defective outdoor fan motor
- Defective stop valve
- Defective electronic expansion valve or coil
- Defective outdoor heat exchanger thermistor
- Defective outdoor unit PCB

Troubleshooting

Check No.01 Refer to P.87
Check No.12 Refer to P.89
Check No.17 Refer to P.92
Check No.18 Refer to P.93
Check No.19 Refer to P.93

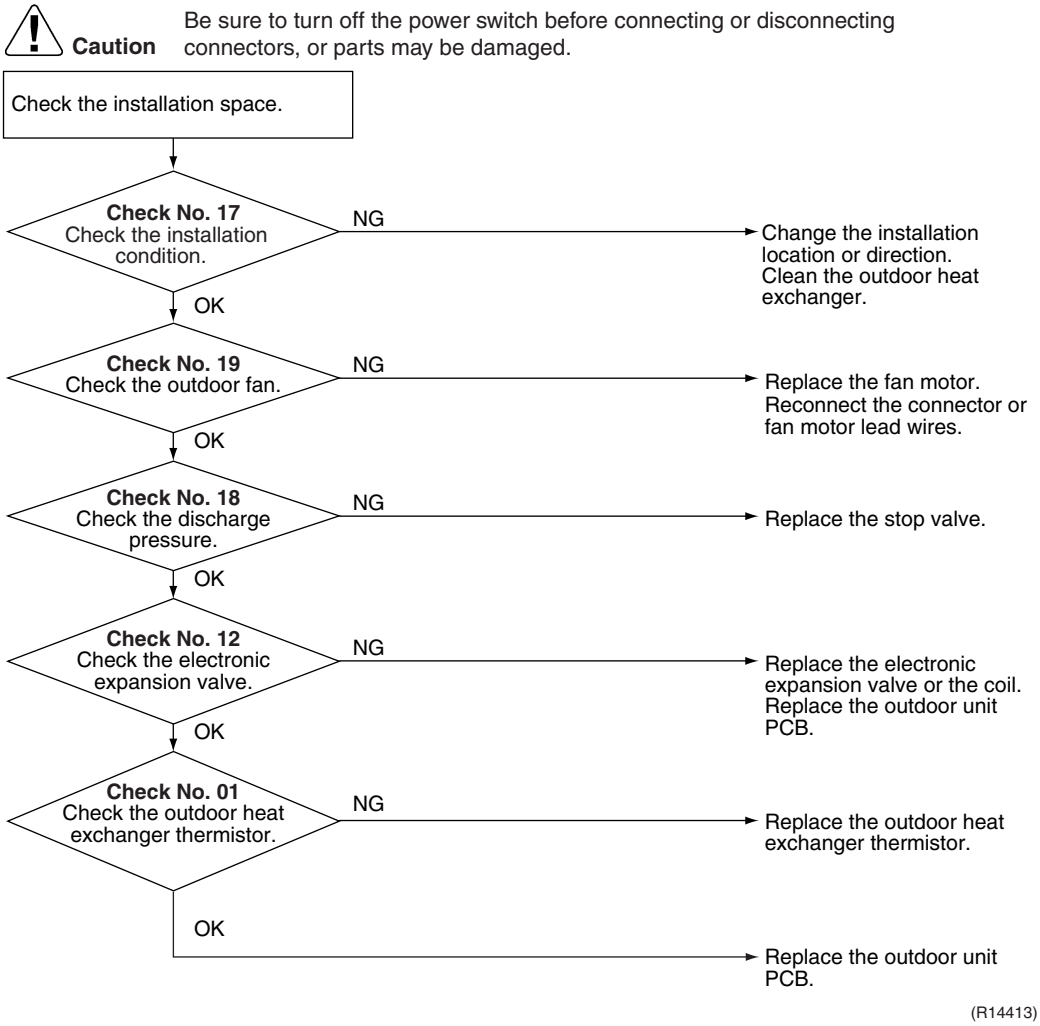

4.15 Compressor System Sensor Abnormality

Remote Controller Display

H0

Method of Malfunction Detection

- The system checks the DC current before the compressor starts.

Malfunction Decision Conditions

- The DC current before compressor start-up is out of the range 0.5 ~ 4.5 V (sensor output converted to voltage value)
- The DC voltage before compressor start-up is below 50 V.

Supposed Causes

- Broken or disconnected harness
- Defective outdoor unit PCB

Troubleshooting

Caution Be sure to turn off the power switch before connecting or disconnecting connectors, or parts may be damaged.

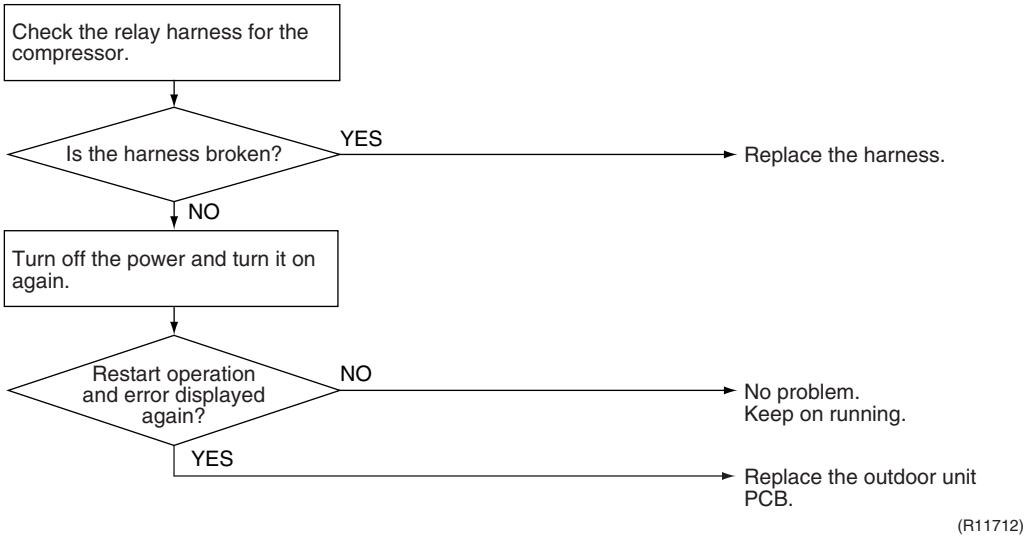

4.16 Position Sensor Abnormality

Remote Controller Display

H6

Method of Malfunction Detection

A compressor start-up failure is detected by checking the compressor running condition through the position detection circuit.

Malfunction Decision Conditions

- The compressor fails to start in about 15 seconds after the compressor run command signal is sent.
- If the error repeats, the system is shut down.
- Reset condition: Continuous run for about 11 minutes without any other error

Supposed Causes

- Disconnection of compressor relay harness
- Defective compressor
- Defective outdoor unit PCB
- Start-up failure caused by the closed stop valve
- Input voltage is outside the specified range

Troubleshooting

Check No.15
Refer to P.91

Check No.18
Refer to P.93

Check No.20
Refer to P.94

Caution Be sure to turn off the power switch before connecting or disconnecting connectors, or parts may be damaged.

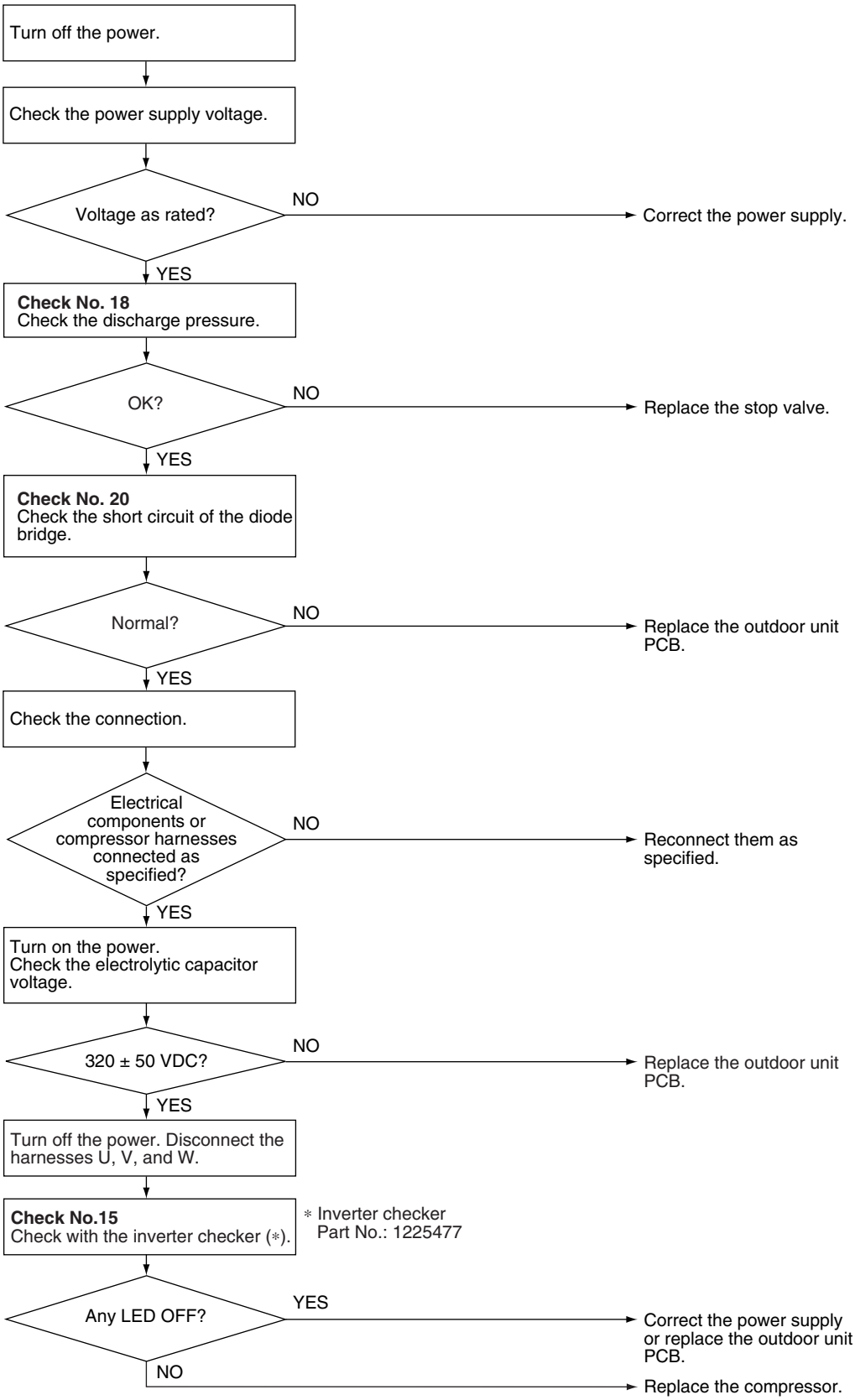

(R14670)

4.17 DC Voltage / Current Sensor Abnormality

Remote Controller Display

H8

Method of Malfunction Detection

DC voltage or DC current sensor abnormality is identified based on the compressor running frequency and the input current.

Malfunction Decision Conditions

- The compressor running frequency is above 52 Hz.
  (The input current is also below 0.1 A.)
- If the error repeats, the system is shut down.
- Reset condition: Continuous run for about 60 minutes without any other error

Supposed Causes

- Defective outdoor unit PCB

Troubleshooting

Caution Be sure to turn off the power switch before connecting or disconnecting connectors, or parts may be damaged.

Replace the outdoor unit PCB.

4.18 Thermistor or Related Abnormality (Outdoor Unit)

Remote Controller Display

H9, J3, J6, P4

Method of Malfunction Detection

This fault is identified based on the thermistor input voltage to the microcomputer.
A thermistor fault is identified based on the temperature sensed by each thermistor.

Malfunction Decision Conditions

- The thermistor input voltage is above 4.96 V or below 0.04 V with the power on.
- J3 error is judged if the discharge pipe temperature is lower than the heat exchanger temperature.

Supposed Causes

- Disconnection of the connector for the thermistor
- Defective thermistor corresponding to the error code
- Defective heat exchanger thermistor in the case of J3 error (outdoor heat exchanger thermistor in cooling operation, or indoor heat exchanger thermistor in heating operation)
- Defective outdoor unit PCB

Troubleshooting

In case of "P4"

Caution Be sure to turn off the power switch before connecting or disconnecting connectors, or parts may be damaged.

Replace the outdoor unit PCB.

P4 : Radiation fin thermistor

Troubleshooting

Check No.01
Refer to P.87

In case of "A9" "J3" "J6"

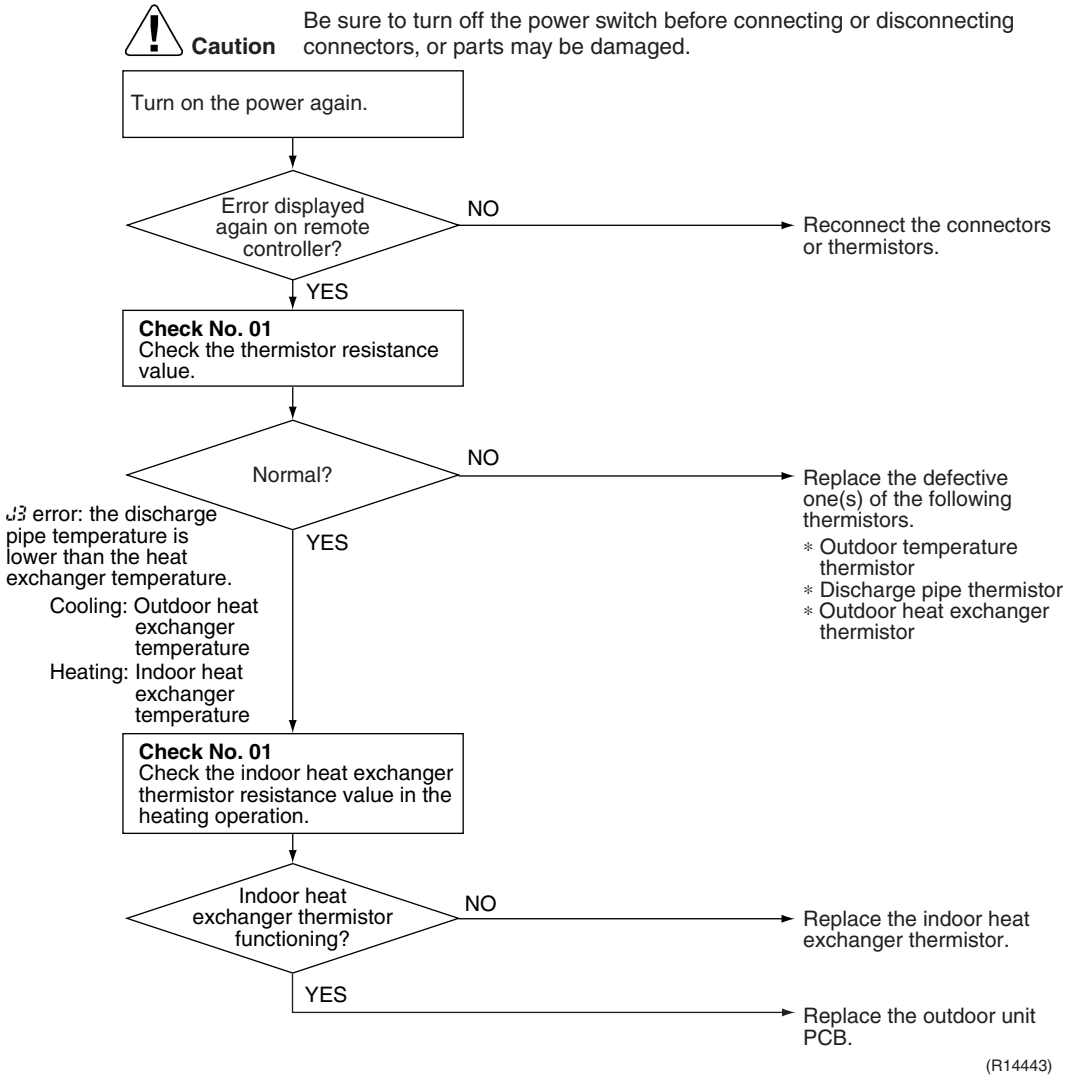

A9 : Outdoor temperature thermistor
J3 : Discharge pipe thermistor
J6 : Outdoor heat exchanger thermistor

4.19 Electrical Box Temperature Rise

Remote Controller Display

L3

Method of Malfunction Detection

An electrical box temperature rise is detected by checking the radiation fin thermistor with the compressor off.

Malfunction Decision Conditions

- With the compressor off, the radiation fin temperature is above **A** °C.
- The error is cleared when the radiation fin temperature drops below **B** °C.
- To cool the electrical components, the outdoor fan starts when the radiation fin temperature rises above **C** °C and stops when it drops below **B** °C.

A (°C)	**B** (°C)	**C** (°C)
99	76	84

Supposed Causes

- Defective outdoor fan motor
- Short circuit
- Defective radiation fin thermistor
- Disconnection of connector
- Defective outdoor unit PCB

Troubleshooting

Check No.17
Refer to P.92

Check No.19
Refer to P.93

Caution Be sure to turn off the power switch before connecting or disconnecting connectors, or parts may be damaged.

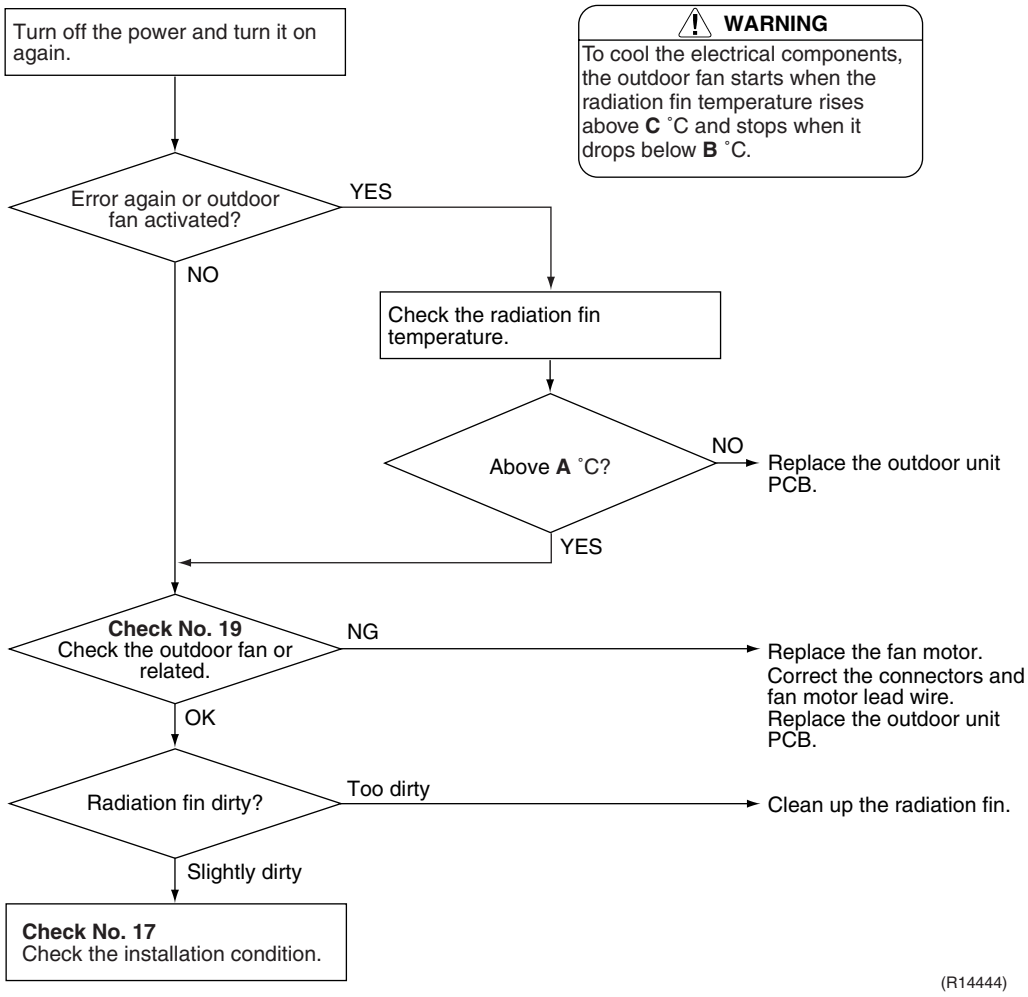

A (°C)	**B** (°C)	**C** (°C)
99	76	84

4.20 Radiation Fin Temperature Rise

Remote Controller Display

L4

Method of Malfunction Detection

A radiation fin temperature rise is detected by checking the radiation fin thermistor with the compressor on.

Malfunction Decision Conditions

- If the radiation fin temperature with the compressor on is above **A** °C.
- The error is cleared when the radiation fin temperature drops below **B** °C.
- If the error repeats, the system is shut down.
- Reset condition: Continuous run for about 60 minutes without any other error

A (°C)	**B** (°C)
99	84

Supposed Causes

- Defective outdoor fan motor
- Short circuit
- Defective radiation fin thermistor
- Disconnection of connector
- Defective outdoor unit PCB
- Silicon grease is not applied properly on the radiation fin after replacing the outdoor unit PCB.

Troubleshooting

Check No.17
Refer to P.92

Check No.19
Refer to P.93

Caution Be sure to turn off the power switch before connecting or disconnecting connectors, or parts may be damaged.

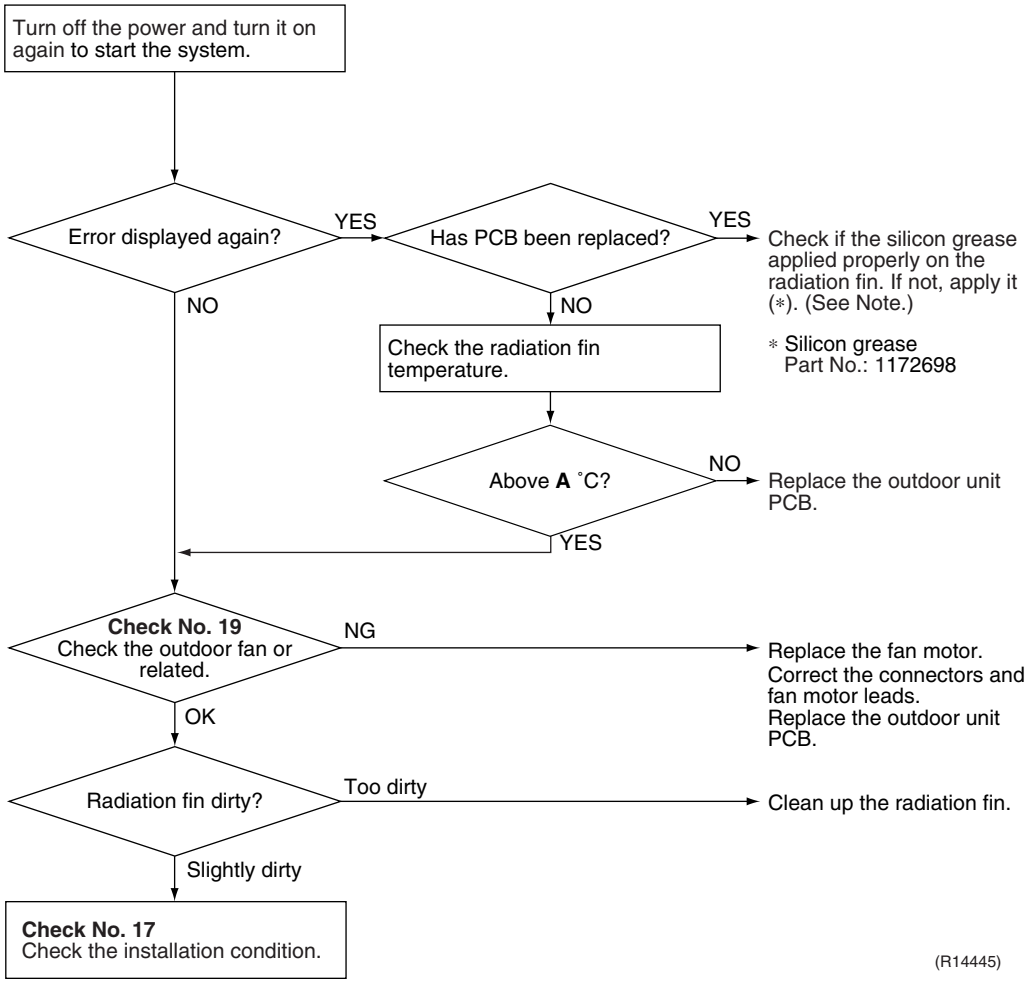

A (°C)
99

Note: Refer to “Application of silicon grease to a power transistor and a diode bridge” on page 141 for detail.

4.21 Output Overcurrent Detection

Remote Controller Display

L5

Method of Malfunction Detection

An output overcurrent is detected by checking the current that flows in the inverter DC section.

Malfunction Decision Conditions

- A position signal error occurs while the compressor is running.
- A speed error occurs while the compressor is running.
- An output overcurrent signal is fed from the output overcurrent detection circuit to the microcomputer.
- If the error repeats, the system is shut down.
- Reset condition: Continuous run for about 11 minutes without any other error

Supposed Causes

- Poor installation condition
- Closed stop valve
- Defective power module
- Wrong internal wiring
- Abnormal power supply voltage
- Defective outdoor unit PCB
- Defective compressor

Troubleshooting

Check No.15
Refer to P.91

Check No.17
Refer to P.92

Check No.18
Refer to P.93

Check No.22
Refer to P.94

Caution Be sure to turn off the power switch before connecting or disconnecting connectors, or parts may be damaged.

∗ An output overcurrent may result from wrong internal wiring. If the system is interrupted by an output overcurrent after the wires have been disconnected and reconnected for part replacement, check the wiring again.

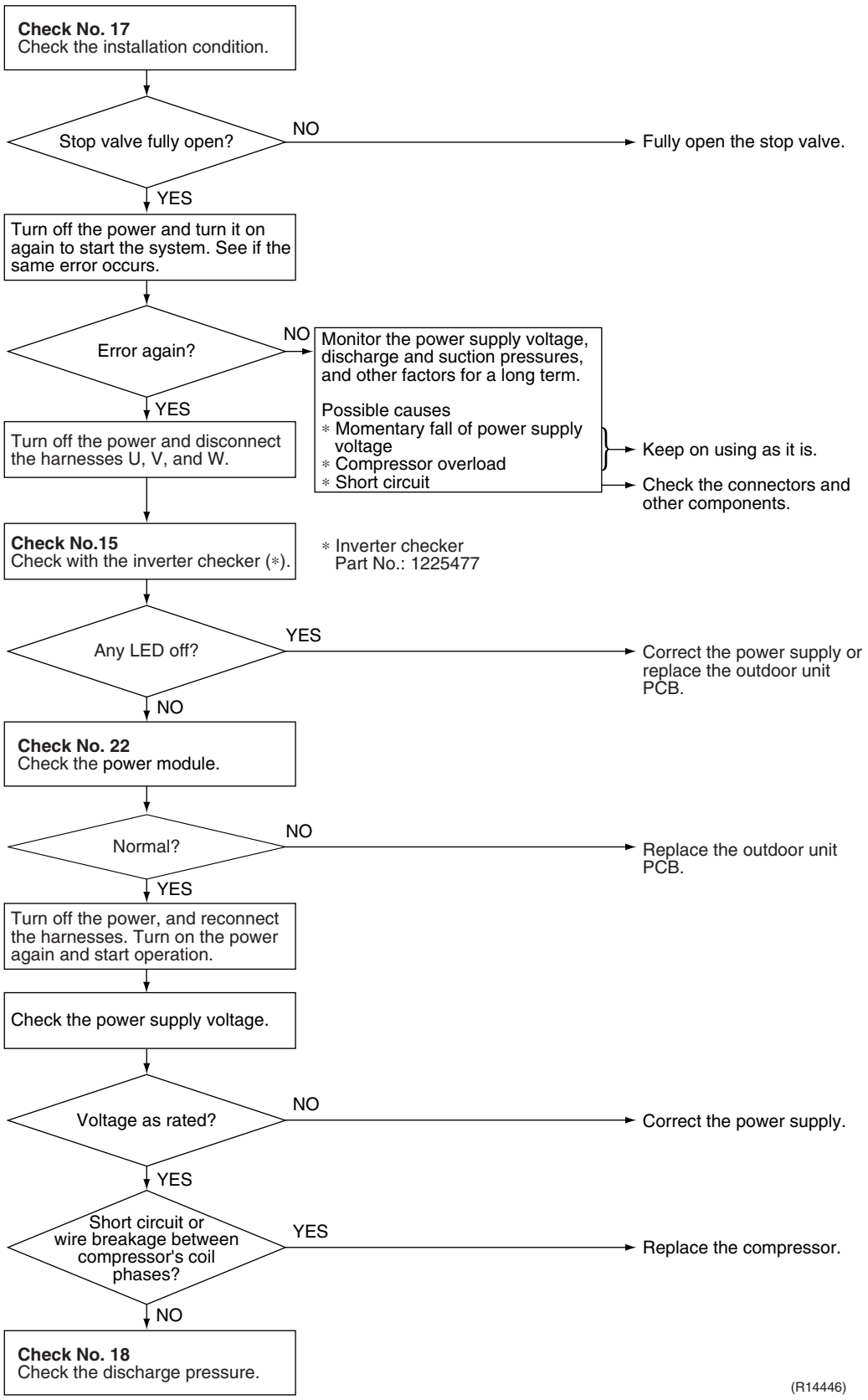

4.22 Refrigerant Shortage

Remote Controller Display

U0

Method of Malfunction Detection

Refrigerant shortage detection I:
Refrigerant shortage is detected by checking the input current value and the compressor running frequency. If the refrigerant is short, the input current is lower than the normal value.

Refrigerant shortage detection II:
Refrigerant shortage is detected by checking the discharge pipe temperature and the opening of the electronic expansion valve. If the refrigerant is short, the discharge pipe temperature tends to rise.

Malfunction Decision Conditions

Refrigerant shortage detection I:
The following conditions continue for 7 minutes.

- Input current × input voltage ≤ **A** × output frequency + **B**
- Output frequency > **C**

A (–)	**B** (W)	**C** (Hz)
1600/256	–160	46

Refrigerant shortage detection II:
The following conditions continue for 80 seconds.
- Opening of the electronic expansion valve ≥ **D**
- Discharge pipe temperature > **E** × target discharge pipe temperature + **F**

		D (pulse)	**E** (–)	**F** (°C)
25 class	Cooling	470	190/128	–7
	Heating		211/128	–11
35 class	Cooling	470	160/128	–1.5
	Heating		172/128	–8

- If the error repeats, the system is shut down.
- Reset condition: Continuous run for about 60 minutes without any other error

Supposed Causes

- Disconnection of discharge pipe thermistor, indoor or outdoor heat exchanger thermistor, room or outdoor temperature thermistor
- Closed stop valve
- Refrigerant shortage (refrigerant leakage)
- Poor compression performance of compressor
- Defective electronic expansion valve

Troubleshooting

Check No.01
Refer to P.87

Check No.12
Refer to P.89

Caution Be sure to turn off the power switch before connecting or disconnecting connectors, or parts may be damaged.

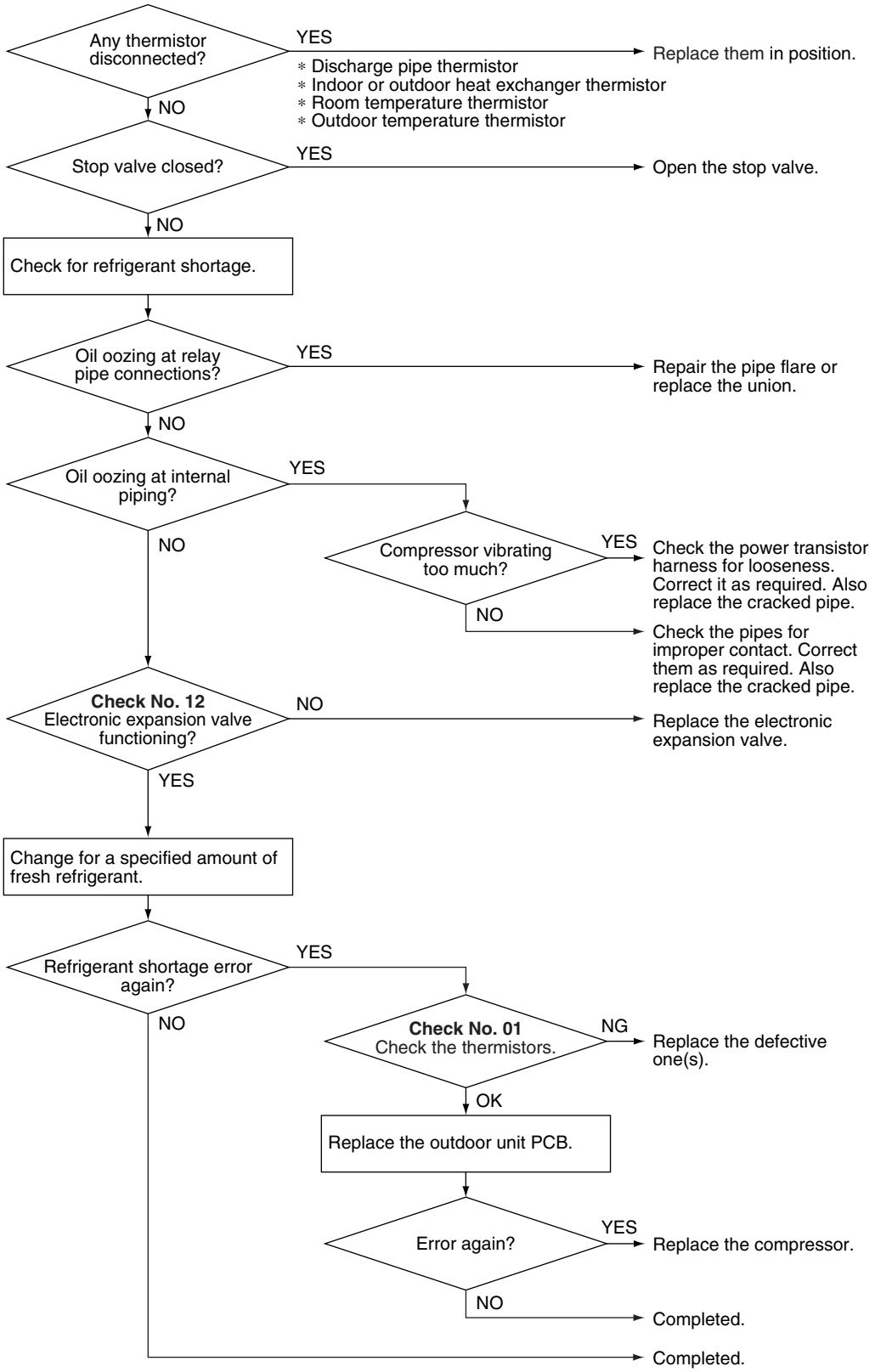

(R14447)

4.23 Low-voltage Detection or Over-voltage Detection

Remote Controller Display

U2

Method of Malfunction Detection

★ Indoor Unit

Evaluation of zero-cross detection of power supply by the indoor unit PCB.

★ Outdoor Unit

Low-voltage detection:
An abnormal voltage drop is detected by the DC voltage detection circuit.

Over-voltage detection:
An abnormal voltage rise is detected by the over-voltage detection circuit.

Malfunction Decision Conditions

★ Indoor Unit

There is no zero-cross detection in approximately 10 seconds.

★ Outdoor Unit

Low-voltage detection:
- The voltage detected by the DC voltage detection circuit is below 180 V.
- The compressor stops if the error occurs, and restarts automatically after 3-minute standby.

Over-voltage detection:
- An over-voltage signal is fed from the over-voltage detection circuit to the microcomputer.
- The compressor stops if the error occurs, and restarts automatically after 3-minute standby.

Supposed Causes

- Power supply voltage is not as specified.
- Defective DC voltage detection circuit
- Defective over-voltage detection circuit
- Defective PAM control part
- Disconnection of compressor harness
- Noise
- Momentary fall of voltage
- Momentary power failure
- Defective indoor unit PCB

Troubleshooting

Caution Be sure to turn off the power switch before connecting or disconnecting connectors, or parts may be damaged.

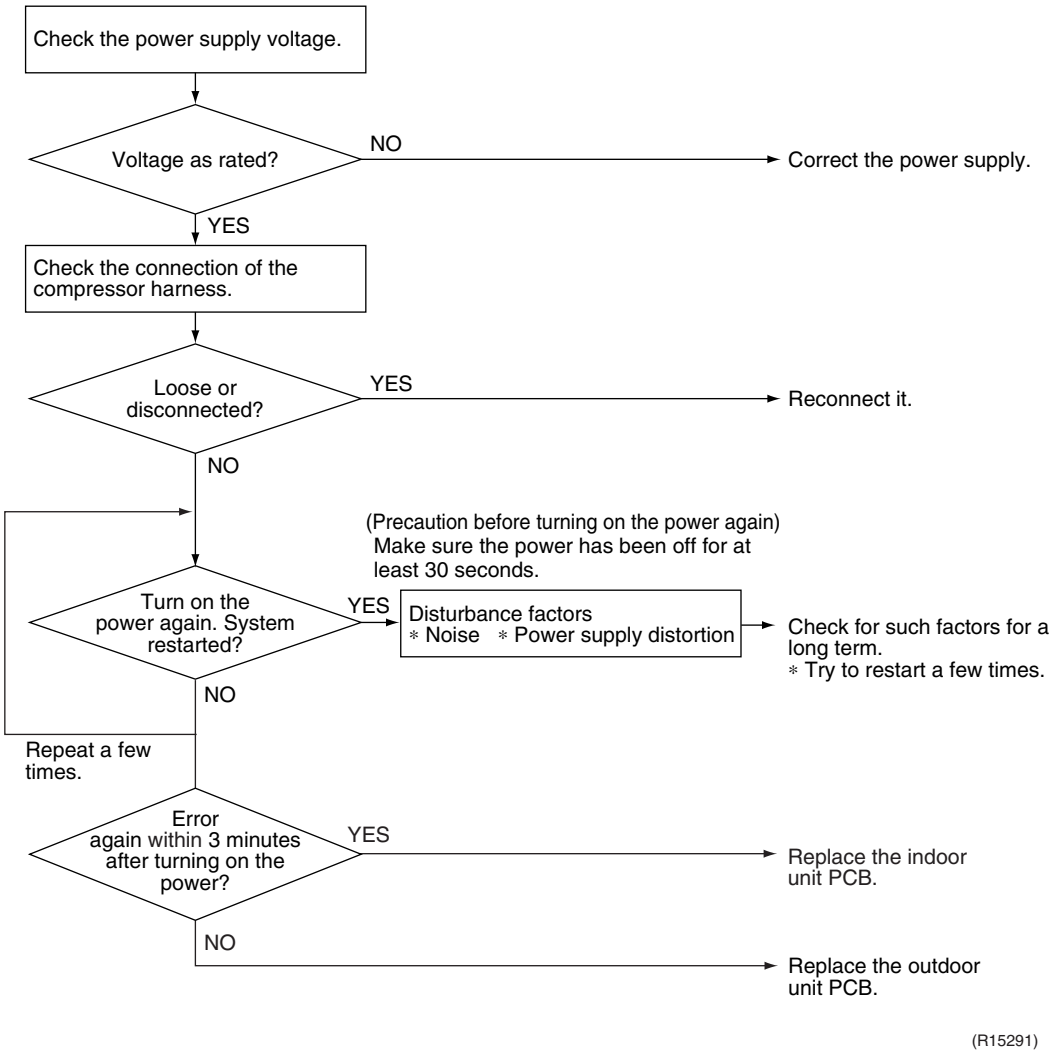

5. Check

5.1 Thermistor Resistance Check

Check No.01

Disconnect the connectors of the thermistors from the PCB, and measure the resistance of each thermistor using a tester.
The relationship between normal temperature and resistance is shown in the table and the graphs below.

Thermistor temperature (°C)	Resistance (kΩ)	
	Room temperature thermistor	Other thermistors
–20	73.4	211.0
–15	57.0	150.0
–10	44.7	116.5
–5	35.3	88.0
0	28.2	67.2
5	22.6	51.9
10	18.3	40.0
15	14.8	31.8
20	12.1	25.0
25	10.0	20.0
30	8.2	16.0
35	6.9	13.0
40	5.8	10.6
45	4.9	8.7
50	4.1	7.2

(R25°C = 10 kΩ, B = 3435 K) (R25°C = 20 kΩ, B = 3950 K)

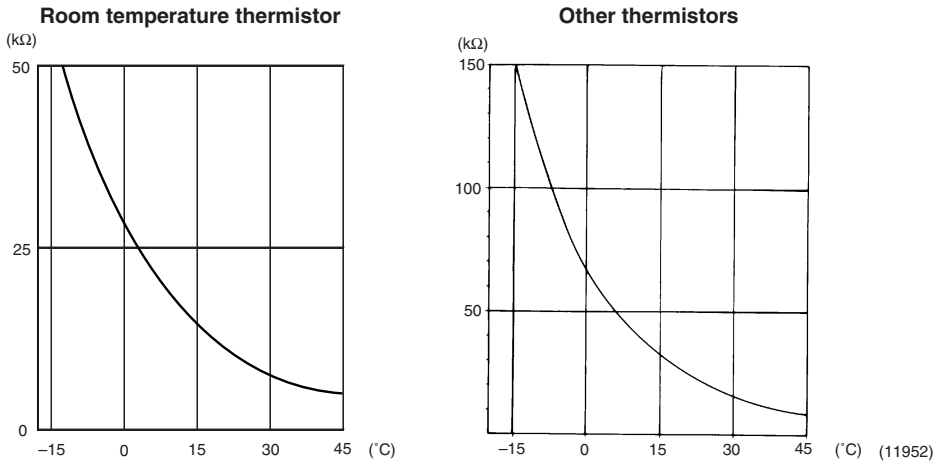

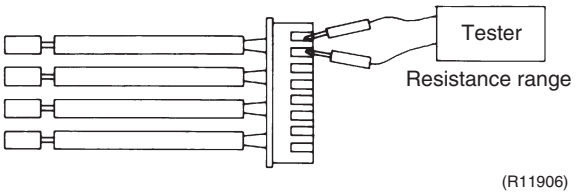

- For models in which the thermistor is directly mounted on the PCB, disconnect the connector for the PCB and measure.

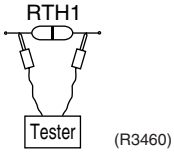

5.2 Hall IC Check

Check No.04

1. Check the connector connection.
2. With the power on, operation off, and the connector connected, check the following.
   ∗Output voltage of about 5 V between pins 1 and 3.
   ∗Generation of 3 pulses between pins 2 and 3 when the fan motor is operating.

If NG in step 1 → Defective PCB → Replace the PCB.
If NG in step 2 → Defective Hall IC → Replace the fan motor.
If OK in both steps 1 and 2 → Replace the PCB.

The connector has 3 pins.

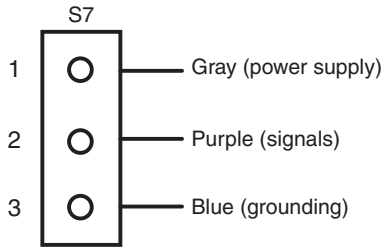

(R14211)

5.3 Power Supply Waveforms Check

Check No.11

Measure the power supply waveform between No. 1 and No. 2 on the terminal board, and check the waveform disturbance.

- Check to see if the power supply waveform is a sine wave. (Fig.1)
- Check to see if there is waveform disturbance near the zero cross. (sections circled in Fig.2)

Fig.1

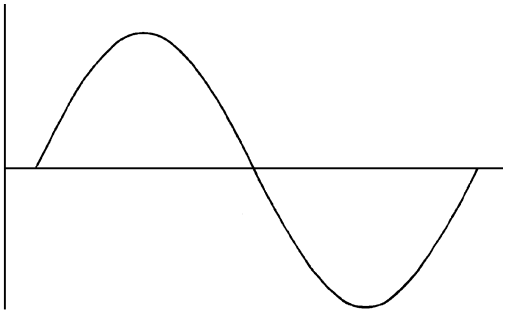

(R1736)

Fig.2

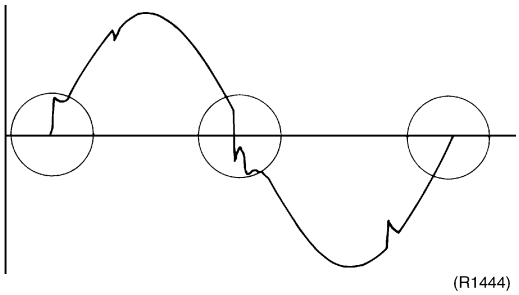

(R1444)

5.4 Electronic Expansion Valve Check

Check No.12

Conduct the followings to check the electronic expansion valve (EV).

1. Check to see if the EV connector is correctly connected to the PCB.
2. Turn the power off and on again, and check to see if the EV generate a latching sound.
3. If the EV does not generate a latching sound in the above step 2, disconnect the connector and check the continuity using a tester.
4. Check the continuity between the pins 1 - 6, 2 - 6, 3 - 6, and 4 - 6. If there is no continuity between the pins, the EV coil is faulty.

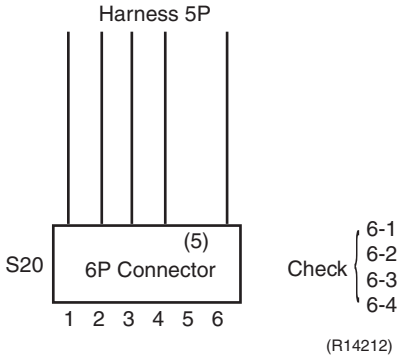

5. If the continuity is confirmed in the above step 3, the outdoor unit PCB is faulty.

Note: Please note that the latching sound varies depending on the valve type.

5.5 Four Way Valve Performance Check

Check No.13

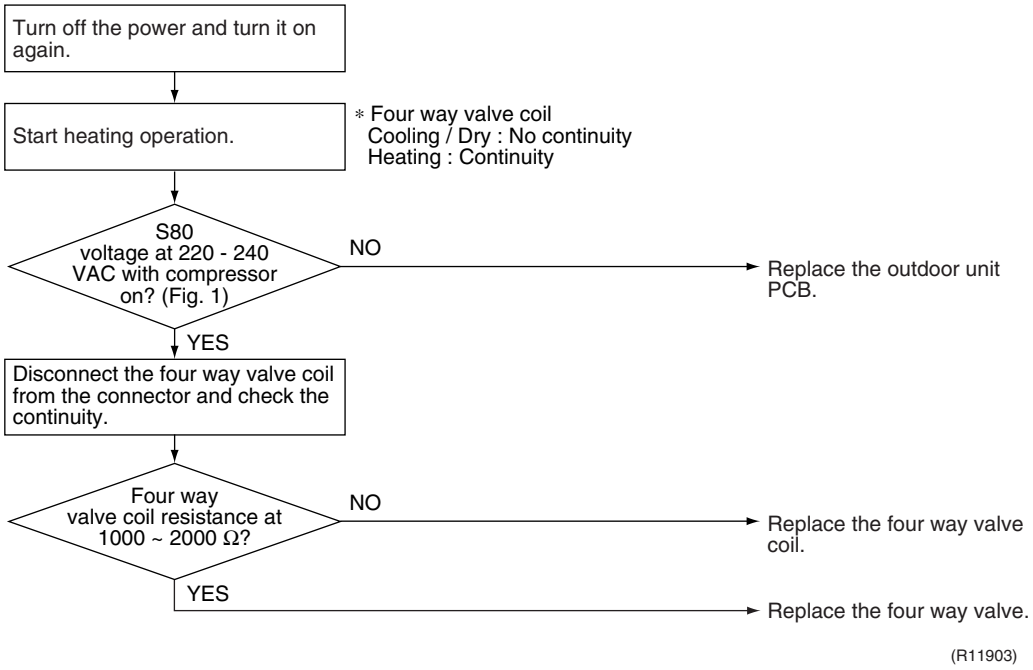

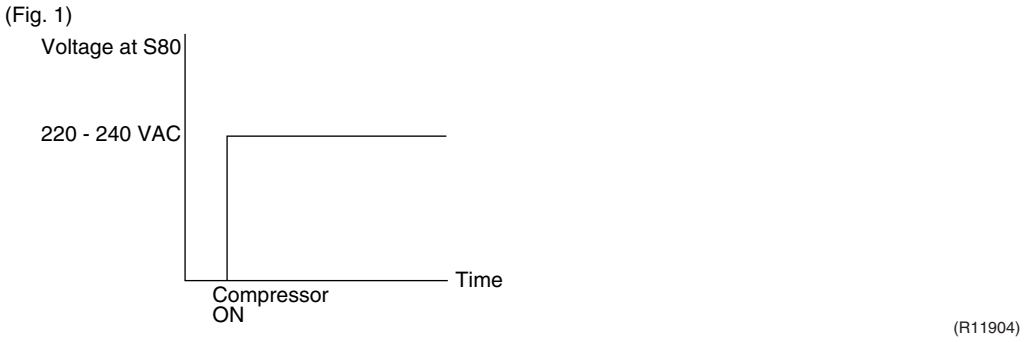

5.6 Inverter Unit Refrigerant System Check

Check No.14

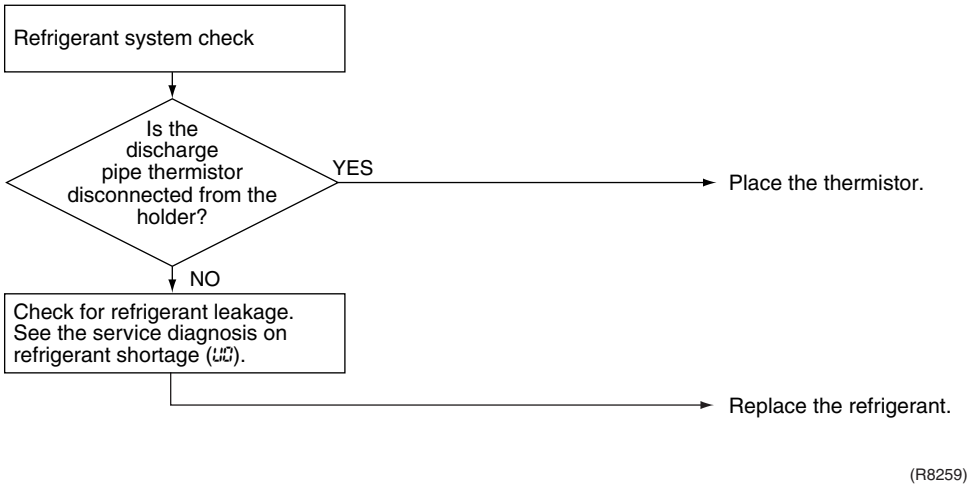

5.7 “Inverter Checker” Check

Check No.15

■ **Characteristics**

If an abnormal stop occurs due to compressor startup failure or overcurrent output when using inverter unit, it is difficult to judge whether it is caused by the compressor failure or other failure (control PCB, power module, etc.). The inverter checker makes it possible to judge the cause of trouble easily and securely. (Connect this checker as a quasi-compressor instead of compressor and check the output of inverter)

■ **Operation Method**

Step 1

Be sure to turn the power off.

Step 2

Install the inverter checker instead of a compressor.

Note:
Make sure the charged voltage of the built-in smoothing electrolytic capacitor drops to 10 VDC or below before carrying out the service work.

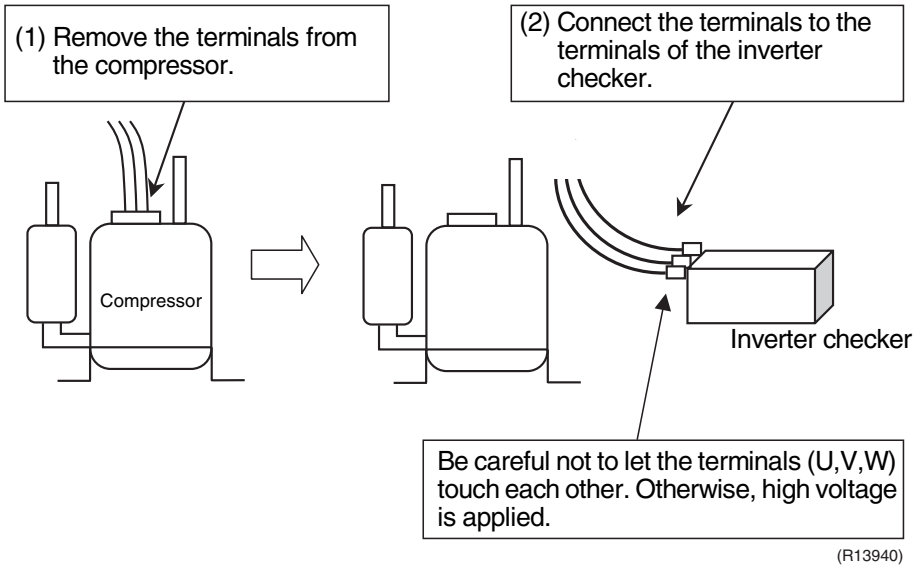

Reference:
If the terminals of the compressor are not FASTON terminals (difficult to remove the wire on the terminals), it is possible to connect wires available on site to the outdoor unit from output side of PCB. (Do not connect them to the compressor at the same time, otherwise it may result in incorrect detection.)

Step 3

Activate power transistor test operation from the indoor unit.

1) Turn the power on.
2) Select FAN operation with the [MODE] button on the remote controller.
3) Press the center of the [TEMP] button and the [MODE] button simultaneously.
   → 00 is displayed with the left-side number blinking.
4) Press the [MODE] button.
   → 00 is displayed with the right-side number blinking.
5) Press the [MODE] button.
   → 7 is displayed.
6) Press the [ON/OFF] button.
   → Power transistor test operation starts.

■ **Diagnose method (Diagnose according to 6 LEDs lighting status.)**

(1) When all the LEDs are lit uniformly, the compressor is defective.
→ Replace the compressor.

(2) When the LEDs are not lit uniformly, check the power module.
→ Refer to **Check No.22**.

(3) If NG in **Check No.22**, replace the power module (PCB).
If OK in **Check No.22**, check if there is any solder cracking on the PCB.

(4) If any solder cracking is found, replace the PCB or repair the soldered section.
If there is no solder cracking, replace the PCB.

Caution

(1) When the output frequency is low, the LEDs blink slowly. As the output frequency increases, the LEDs blink quicker. (The LEDs look like they are lit.)

(2) On completion of diagnose by the inverter checker, be sure to re-crimp the FASTON terminals. Otherwise, the terminals may be burned due to loosening.

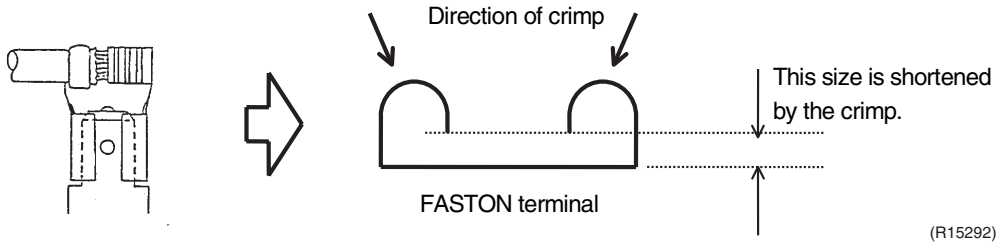

5.8 Installation Condition Check

Check No.17

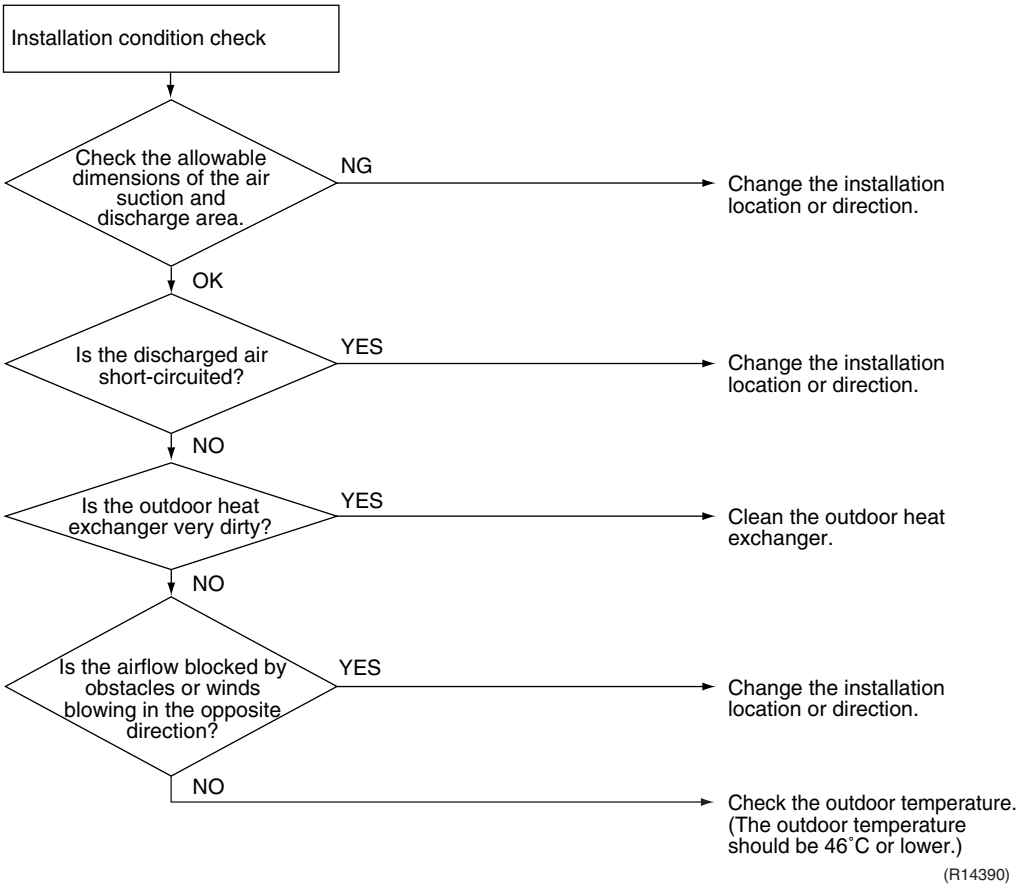

5.9 Discharge Pressure Check

Check No.18

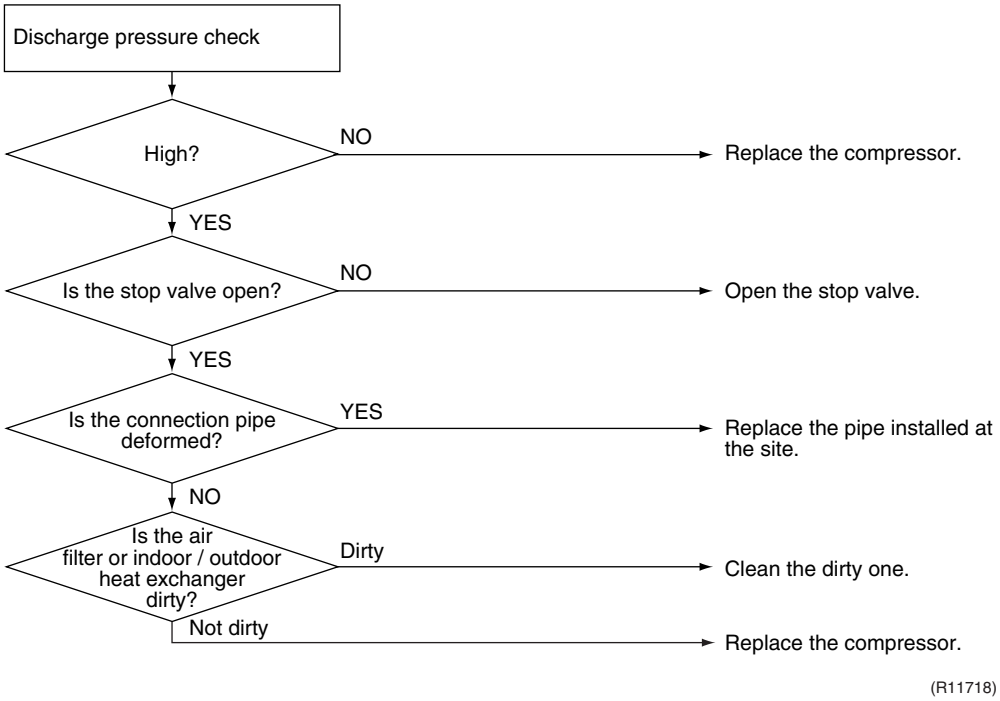

5.10 Outdoor Fan System Check

Check No.19 **AC motor**

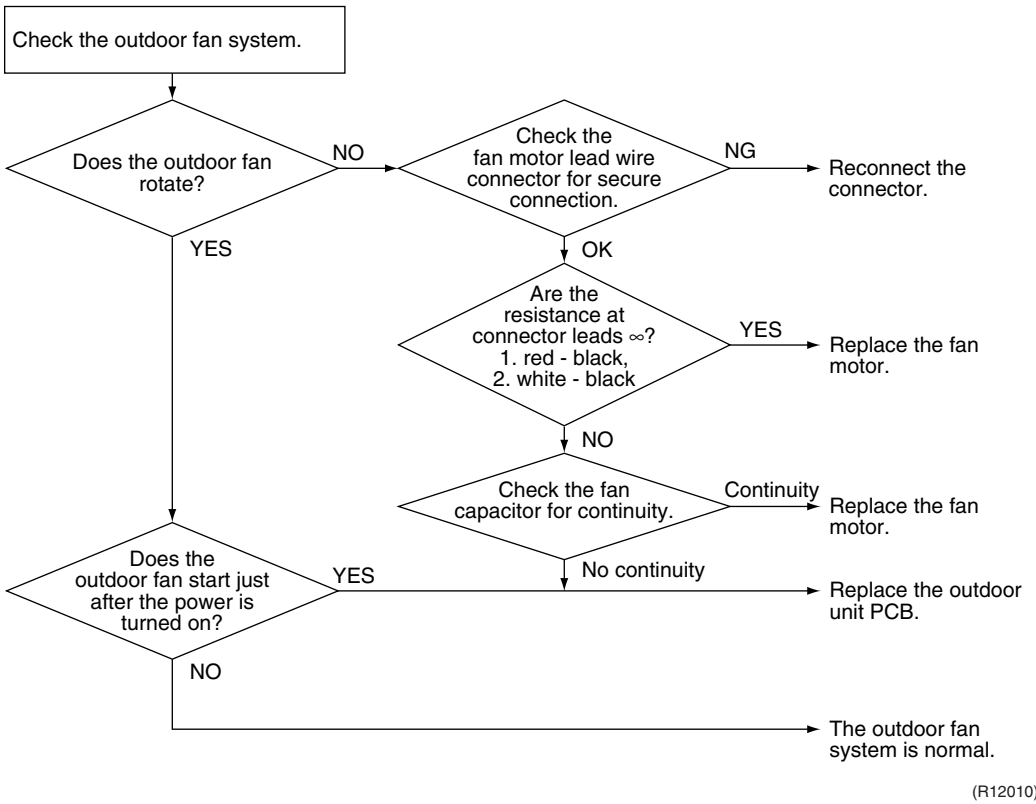

5.11 Main Circuit Short Check

Check No.20

Note: Check to make sure that the voltage between (+) and (–) of the diode bridge (DB1) is approx. 0 V before checking.

- Measure the resistance between the pins of the DB1 as below.
- If the resistance is ∞ or less than 1 kΩ, short circuit occurs on the main circuit.

(–) terminal of the tester (in case of digital, (+) terminal)	~ (2, 3)	+ (4)	~ (2, 3)	– (1)
(+) terminal of the tester (in case of digital, (–) terminal)	+ (4)	~ (2, 3)	– (1)	~ (2, 3)
Resistance is OK.	several kΩ ~ several MΩ	∞	∞	several kΩ ~ several MΩ
Resistance is NG.	0 Ω or ∞	0	0	0 Ω or ∞

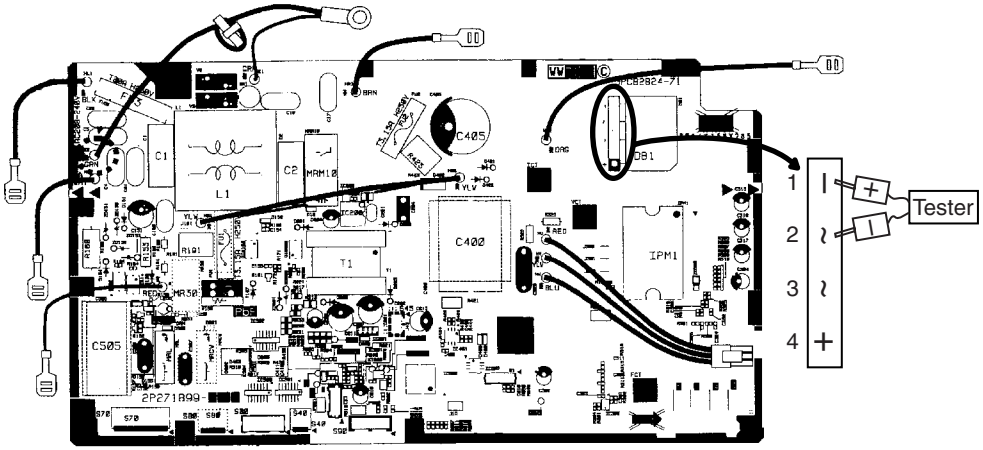

(R14597)

5.12 Power Module Check

Check No.22

Note: Check to make sure that the voltage between (+) and (–) of the diode bridge (DB1) is approx. 0 V before checking.

- Disconnect the compressor harness connector from the outdoor unit PCB. To disengage the connector, press the protrusion on the connector.
- Follow the procedure below to measure resistance between the terminals of the DB1 and the terminals of the compressor with a multi-tester. Evaluate the measurement results for a judgment.

Negative (–) terminal of tester (positive terminal (+) for digital tester)	DB1 (+)	UVW	DB1 (–)	UVW
Positive (+) terminal of tester (negative terminal (–) for digital tester)	UVW	DB1 (+)	UVW	DB1 (–)
Resistance is OK.	several kΩ ~ several MΩ			
Resistance is NG.	0 Ω or ∞			

Part 7
Removal Procedure

1. Indoor Unit....96
   1.1 Removal of Air Filters....96
   1.2 Removal of Horizontal Blade....98
   1.3 Removal of Front Panel....100
   1.4 Removal of Front Grille....101
   1.5 Removal of Electrical Box / Vertical Blades....102
   1.6 Removal of Swing Motor / PCBs....107
   1.7 Removal of Indoor Heat Exchanger....111
   1.8 Removal of Fan Rotor / Fan Motor....114
   1.9 Exchange of Drain Hose (Piping Direction)....117
2. Outdoor Unit....118
   2.1 Removal of Outer Panels....118
   2.2 Removal of Outdoor Fan / Fan Motor....120
   2.3 Removal of Electrical Box / PCB....122
   2.4 Removal of Sound Blankets....130
   2.5 Removal of Four Way Valve....132
   2.6 Removal of Compressor....135

1. Indoor Unit

1.1 Removal of Air Filters

Procedure

Warning **Be sure to wait for 10 minutes or more after turning off all power supplies before disassembling work.**

Step	Procedure	Points
1. Appearance features	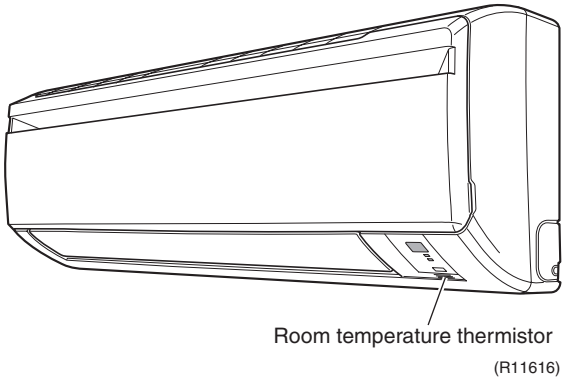	**Warning** **Dangerous: High voltage** **A high voltage is applied to all the electric circuits of this product including thermistors.**
	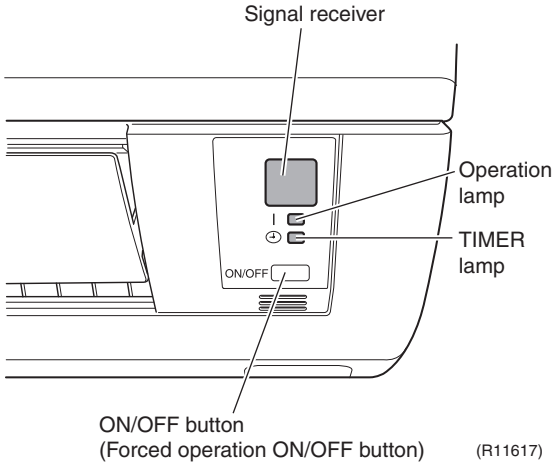	■ When a signal from the remote controller is received, the receiving tone sounds and the operation lamp flickers immediately to confirm the signal reception. ■ When the ON/OFF button is kept pressed for 5 seconds, the forced cooling operation is performed for about 15 minutes.
2. Remove the air filters.		
1 Open the front panel to the position where it stops.	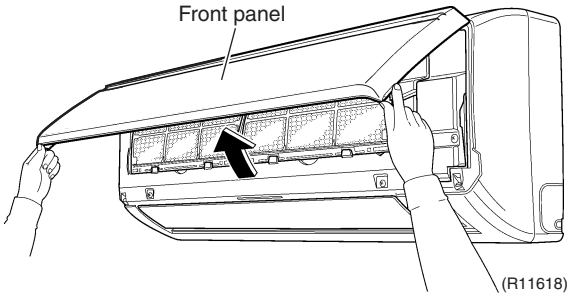	
2 Slightly push up the knob at the center of the air filter.	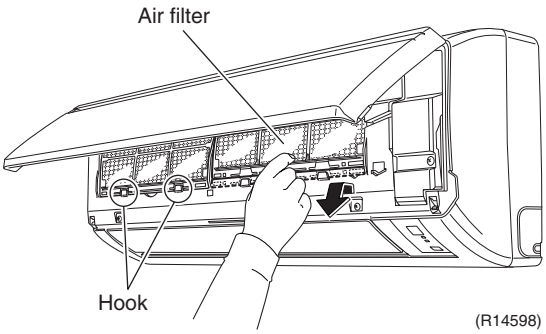	■ The air filter is not marked for difference between the right and left sides. ■ The air filter can be set easily by inserting it along the guides. ■ Insert the air filter with the “FRONT” mark faced up. ■ Be sure to insert the hooks (at 2 lower positions) when mounting the air filter.

Step	Procedure		Points
3	Pull out the air filter downward and remove it.	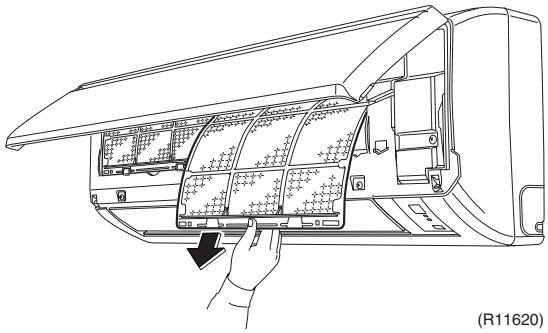 (R11620)	
3. Remove the Titanium apatite photocatalytic air-purifying filters.			
1	The Titanium apatite photocatalytic air-purifying filter is attached to the back of the air filter.	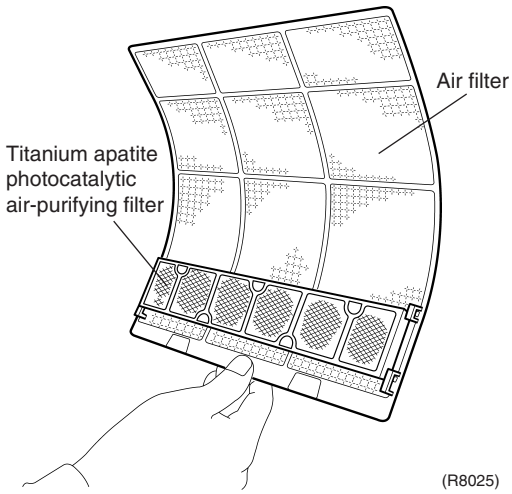 (R8025)	
2	Remove the Titanium apatite photocatalytic air-purifying filter frame by bending the air filter and unfastening the projections from the air filter frame.	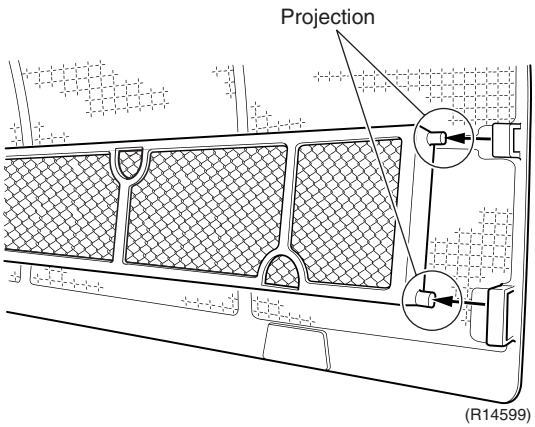 (R14599)	
3	Remove the Titanium apatite photocatalytic air-purifying filter from its frame (at 5 positions) by bending it.	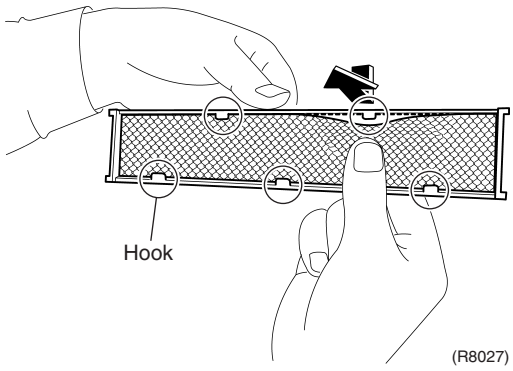 (R8027)	■ To prevent the damage, do not remove the Titanium apatite photocatalytic air-purifying filter from the frame when cleaning it. ■ The Titanium apatite photocatalytic air-purifying filter is not marked for difference between the right and left sides.

1.2 Removal of Horizontal Blade

Procedure

Warning **Be sure to wait for 10 minutes or more after turning off all power supplies before disassembling work.**

Step	Procedure		Points
1	Open the horizontal blade.	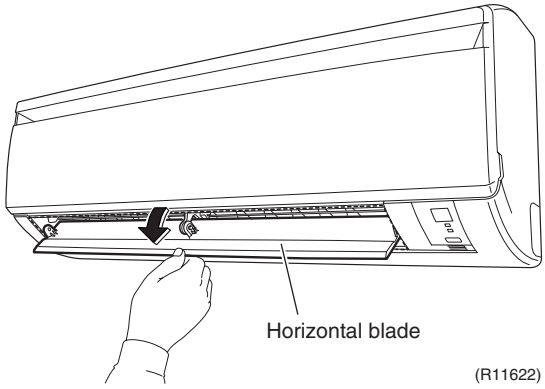	
2	Unfasten the center shaft while bending the horizontal blade slightly.	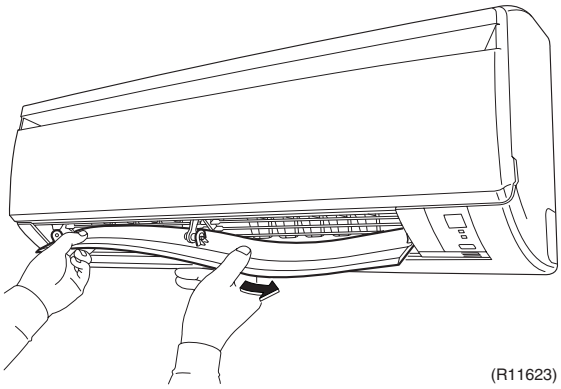 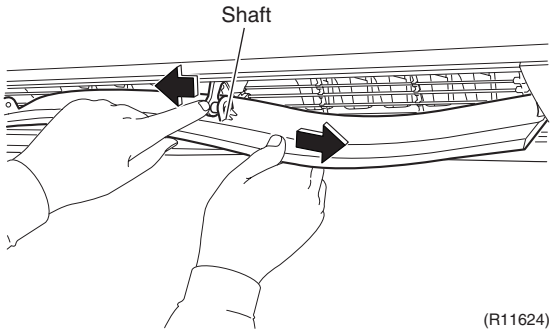	■ The center shaft can be released easily by bending the blade. **Cautions for reassembling** 1. Since the key pattern hook is provided, rotate the horizontal blade and fit it to the right shaft first. 2. Fit the horizontal blade to the center and left shafts.
3 4	Unfasten the left shaft of the horizontal blade. Unfasten the right shaft of the horizontal blade.	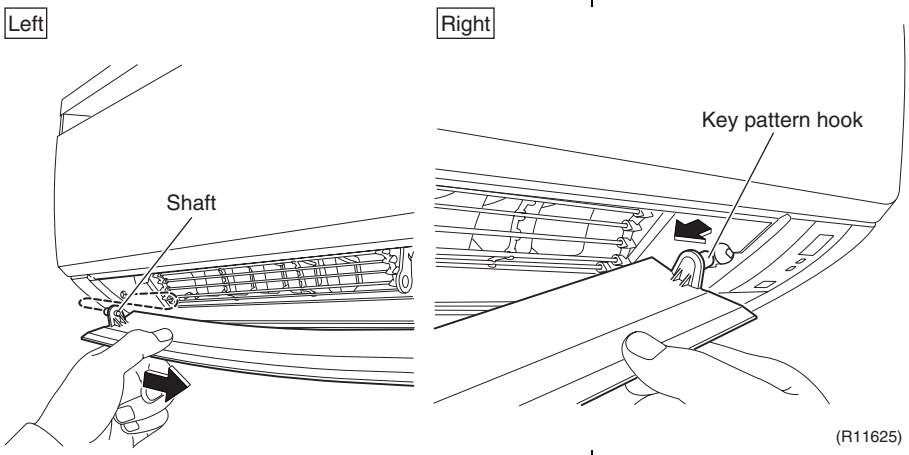	

Step	Procedure		Points
5	Remove the horizontal blade.	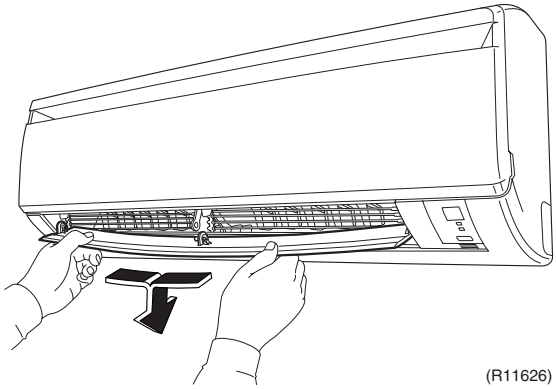 (R11626)	

1.3 Removal of Front Panel

Procedure ⚠ **Warning** **Be sure to wait for 10 minutes or more after turning off all power supplies before disassembling work.**

Step	Procedure		Points
1	Open the front panel over the position where it stops.	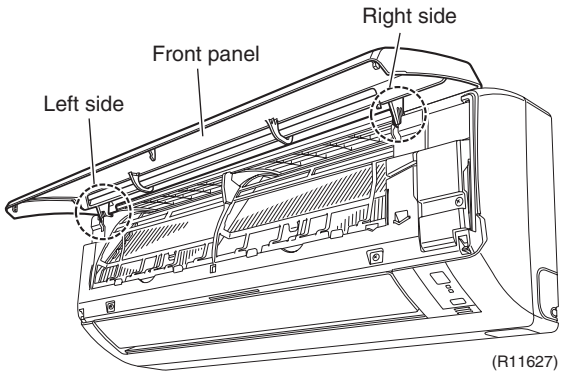	
2	Release the right rotary shaft.	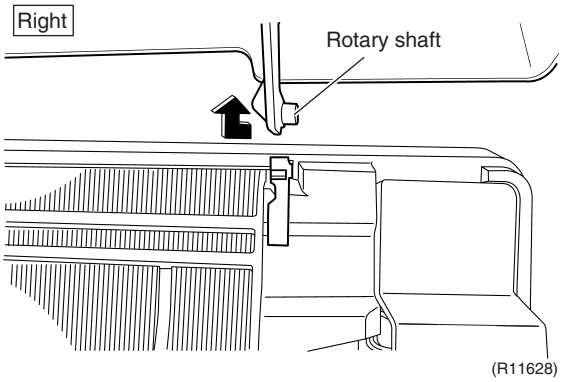	■ The rotary shaft on each side can be released easily by sliding each shaft inwards.
3	Release the left rotary shaft.	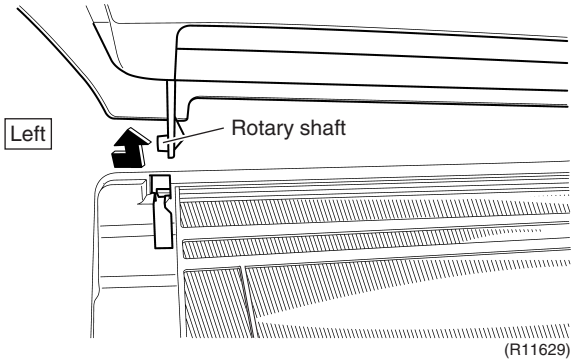	
4	Remove the front panel.	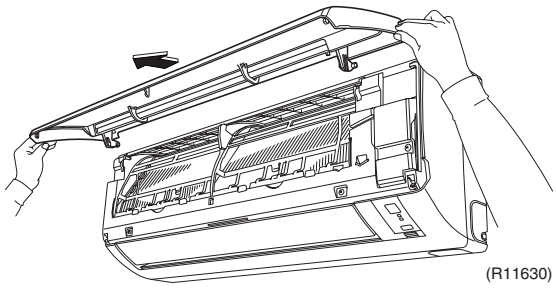	■ When reassembling the front panel, fit the right and left rotary shafts one by one into the grooves and fully push them in position.

1.4 Removal of Front Grille

Procedure ⚠ **Warning** **Be sure to wait for 10 minutes or more after turning off all power supplies before disassembling work.**

Step	Procedure		Points
1	Remove the 2 screws, which fix the front grille to the main body.	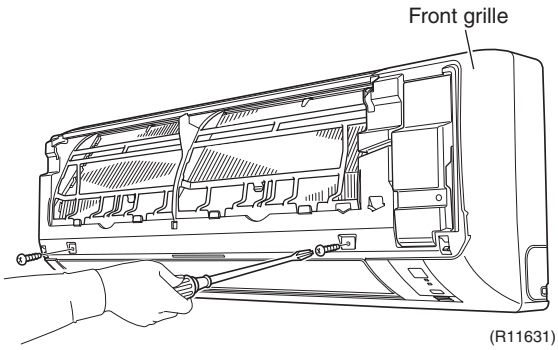	
2	The front grille has 3 hooks on the upper part.	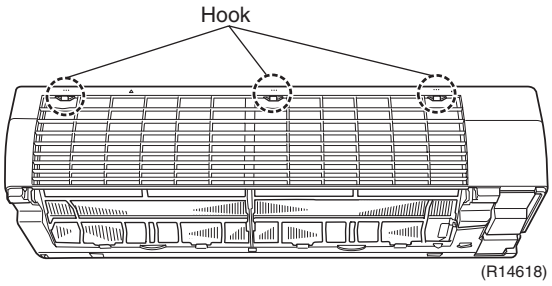	■ Refer to the removal procedure in a reverse way when reassembling.
3	Press each hook, and also lift the grille up to unfasten the hooks.	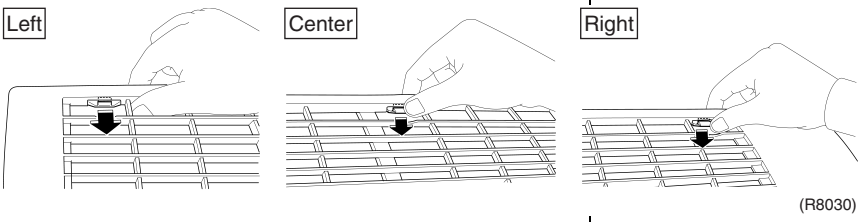	
4	Pull the upper part of the front grille out and lift the lower part up, and then remove the front grille.	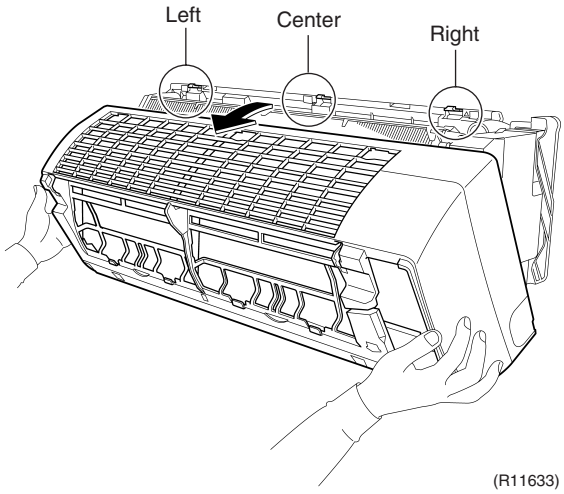	■ The convex marks (...) on the front panel indicate the position of the hooks. 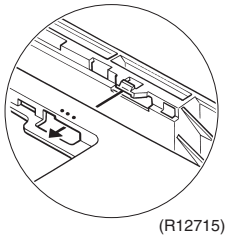 ■ When reassembling, make sure that all the 3 hooks are fastened as they were.

1.5 Removal of Electrical Box / Vertical Blades

Procedure

Warning **Be sure to wait for 10 minutes or more after turning off all power supplies before disassembling work.**

Step	Procedure		Points
1. Disconnect the connecting wires.			**Preparation** ■ Remove the front grille according to the “Removal of Front Grille”.
1	Remove the screw of the service cover.	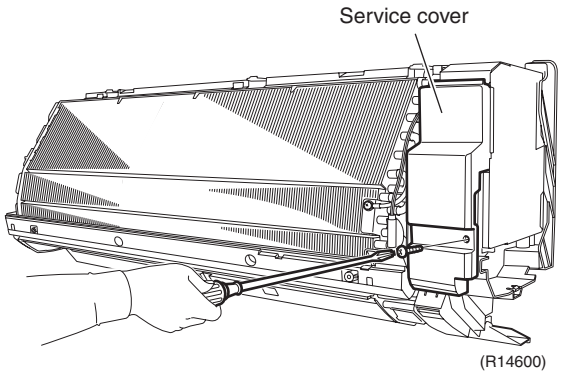	
2	Pull out the service cover down in the direction of the arrow.	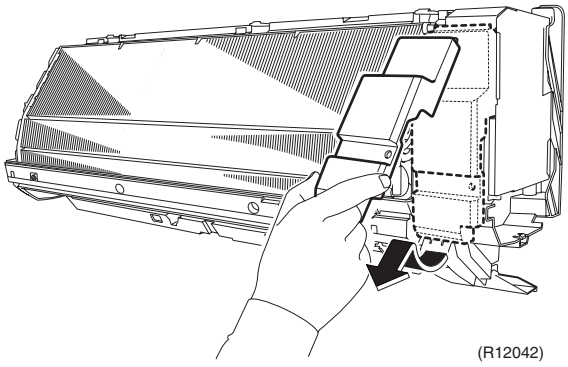	
3	The figure shows the connections of wire harnesses.	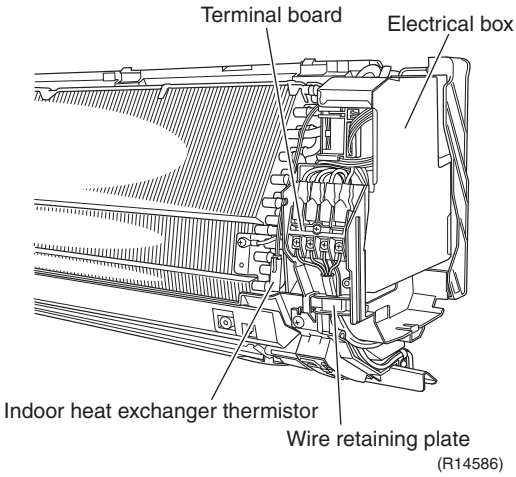	
4	Remove the screw of the wire retaining plate.	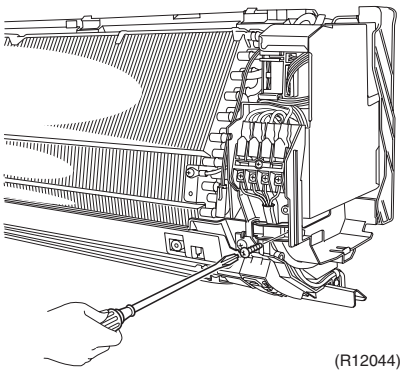	

Step	Procedure		Points
5	Loosen the screws of the terminal board and disconnect the connecting wires.	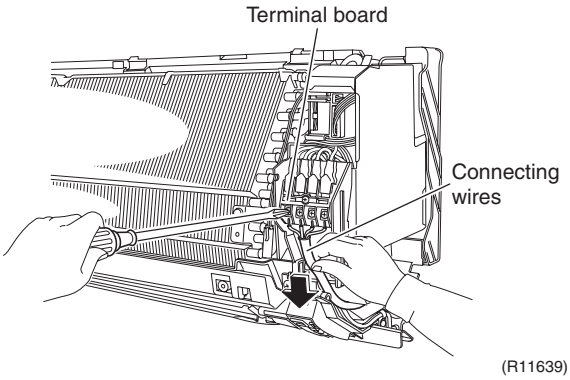	■ Connecting wires black (1) ----- power supply white (2) ----- power supply red (3) ----- transmission yellow / green (⏚) ----- earth
6	Pull out the indoor heat exchanger thermistor.	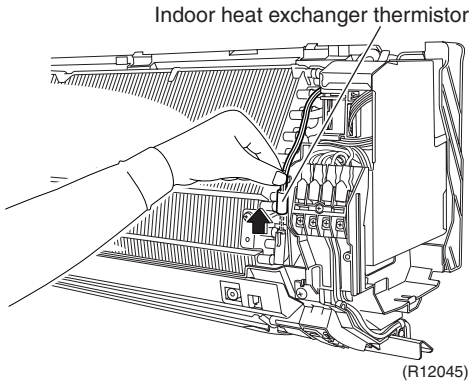	■ Take care not to lose the clip of thermistor. 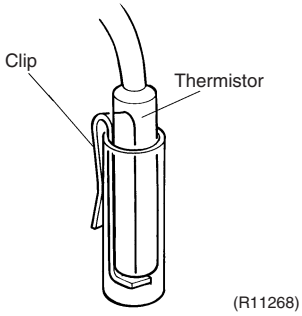
2. Remove the electrical box.			
1	Remove the screw and disconnect the earth wire.	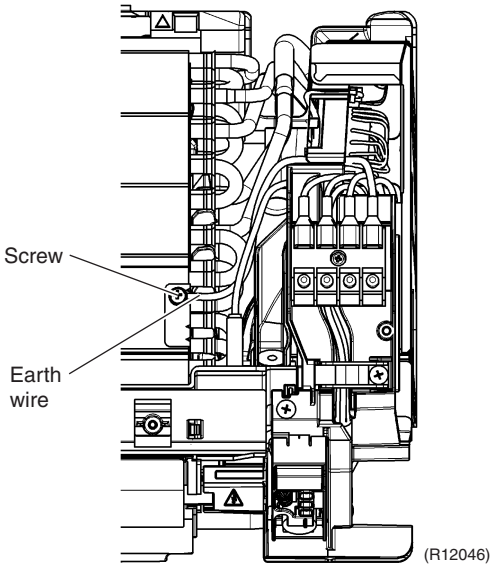	

Step	Procedure		Points
2	Disconnect the connectors for the fan motor [S1] [S7]. Release the fan motor harnesses from the hook.	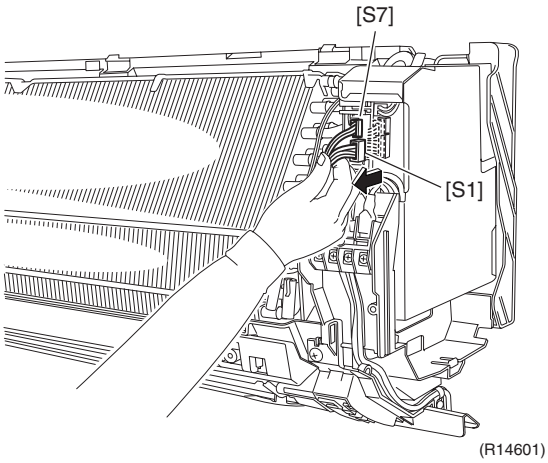	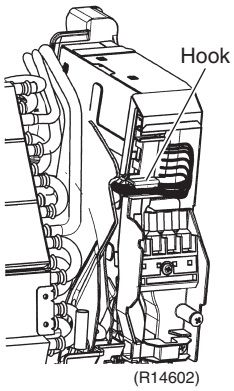
3	Remove the screw of the electrical box.	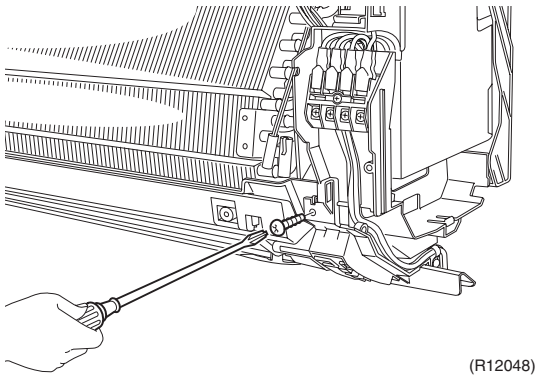	
4 5	Slide the electrical box to the right first and detach the horizontal blade from the electrical box. Pull the electrical box.	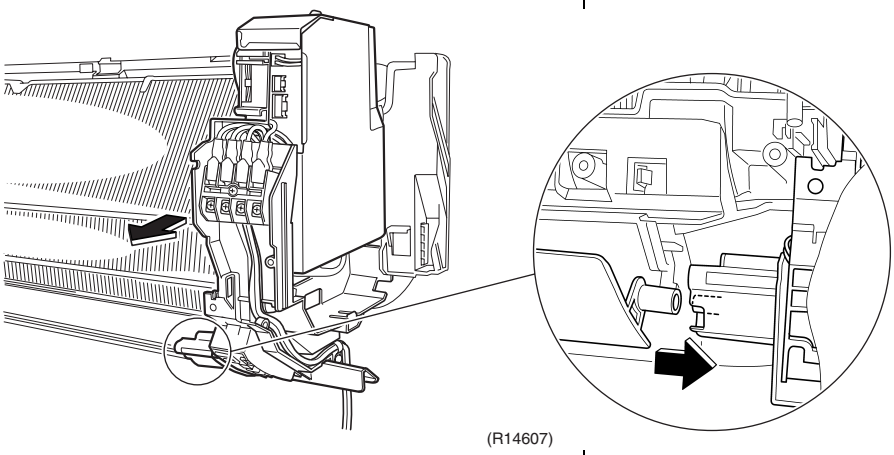	
		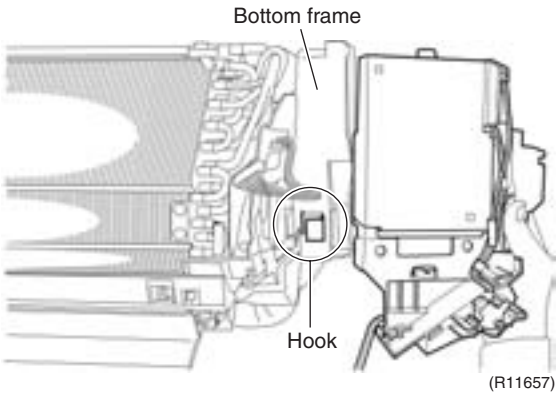	■ There is a hook on the bottom frame. When reassembling, fit the rear side of the electrical box to the hook.

Step	Procedure	Points
3. Remove the vertical blade ASSY.		
1	Unfasten the right and left hooks of the fan guard with pliers.	■ Narrow the edges of the hook to unfasten it.
2	Unfasten the 4 hooks at the bottom. Remove the fan guard.	■ Repeat the same procedure to remove the fan guard on the other side. ■ The right fan guard has sealing materials on the right side.
3	Unfasten the hooks at the upper 2 positions.	■ A vertical blade ASSY has 6 fins. It is impossible to replace only one fin. ■ The vertical blade ASSY is not marked for difference between right and left.

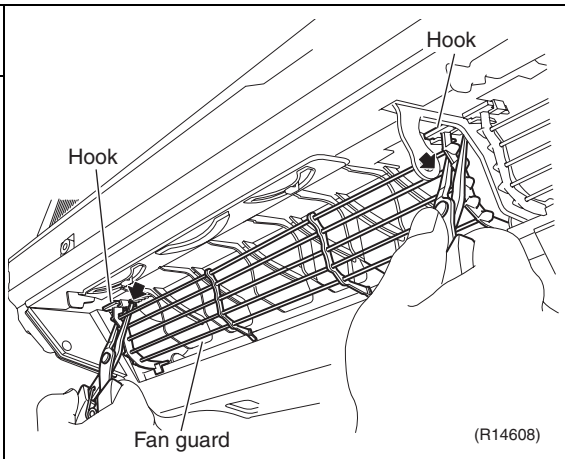

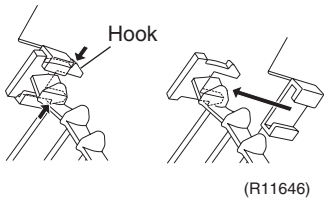

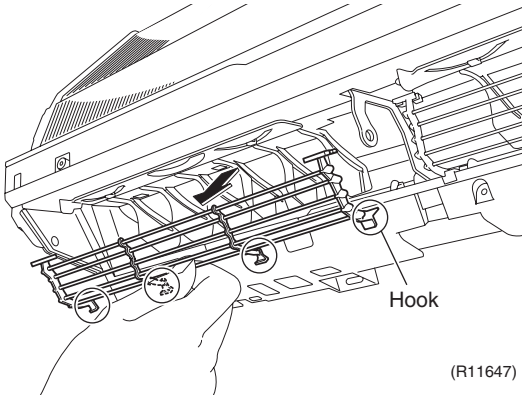

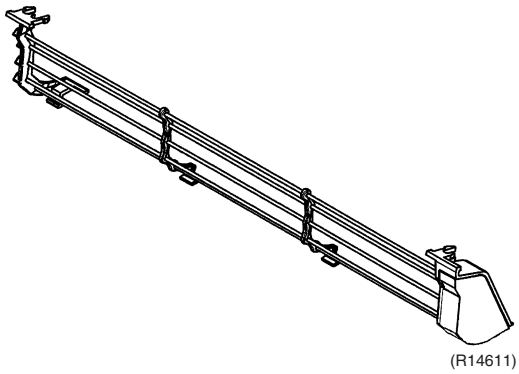

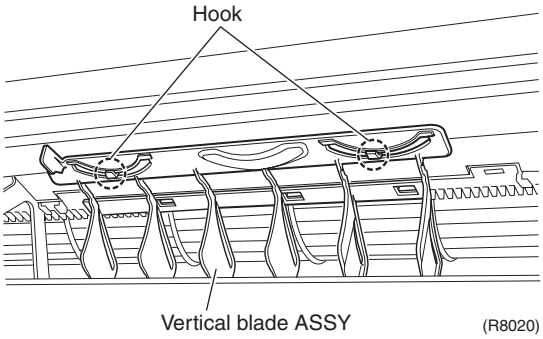

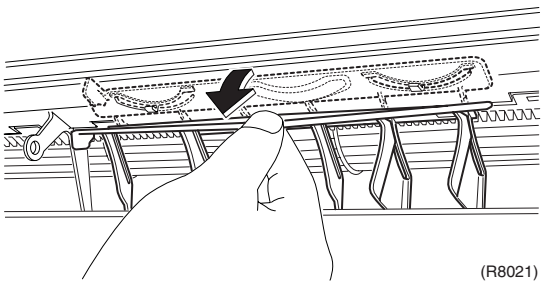

Step	Procedure		Points
4	Unfasten the 3 hooks at the shaft mounting part by pressing them with a flat screwdriver.	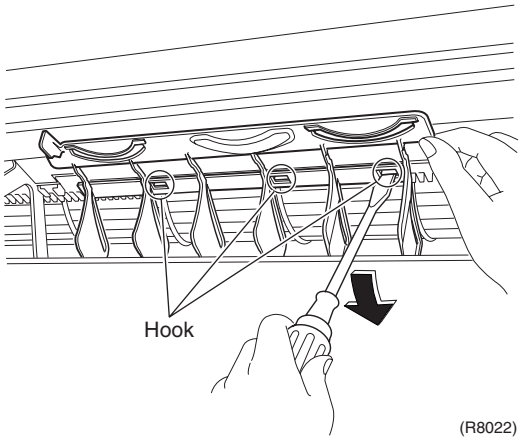	
5	Remove the vertical blade ASSY.	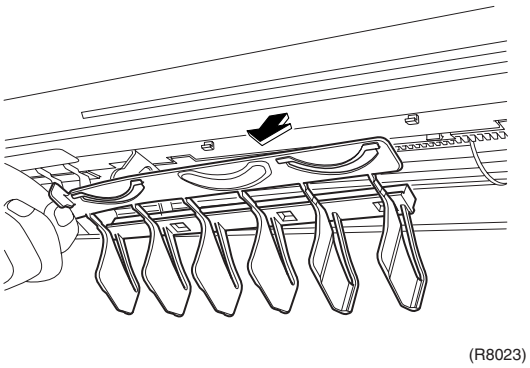	■ Repeat the same procedure to remove the vertical blade ASSY on the other side.

1.6 Removal of Swing Motor / PCBs

Procedure

Warning **Be sure to wait for 10 minutes or more after turning off all power supplies before disassembling work.**

Step		Procedure	Points
1. Remove the shield plate (2).		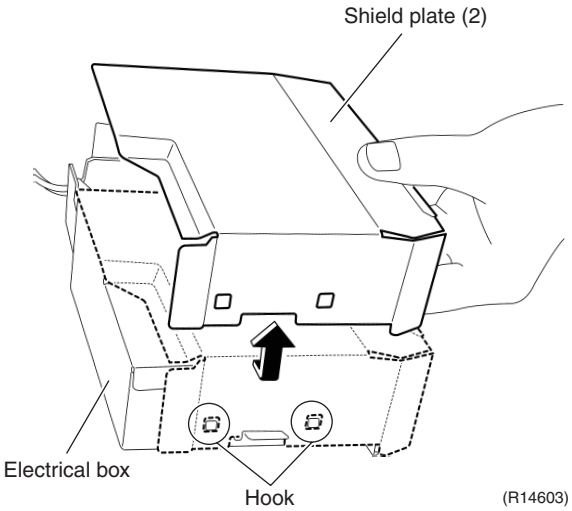	**Preparation** ■ Remove the electrical box according to the “Removal of Electrical Box / vertical Blades”.
1	Unfasten the hooks at the upper 2 positions of the shield plate (2).		
2	Unfasten the hook at the lower position, and remove the shield plate (2).	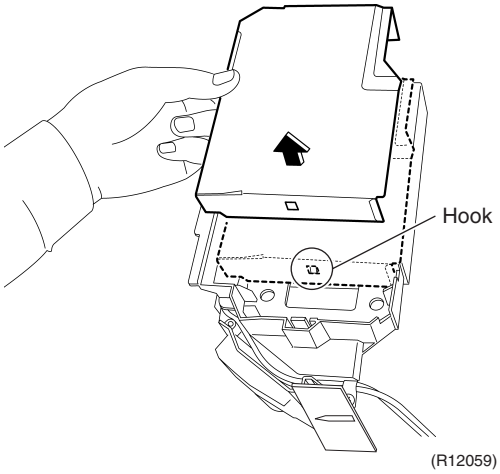	
2. Remove the swing motor.		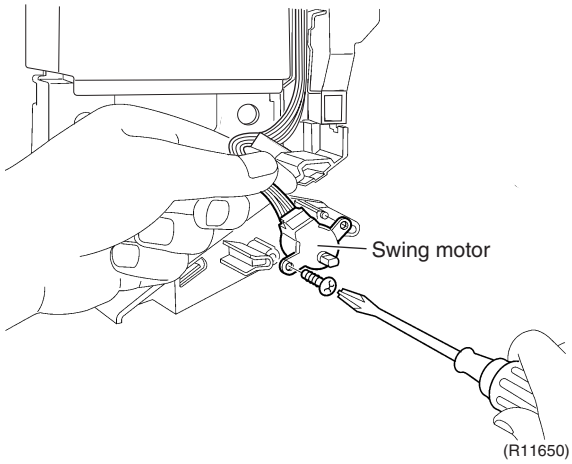	
1	Remove the screw of the swing motor.		

Step	Procedure		Points
2	Unfasten the hook, and disconnect the connector.	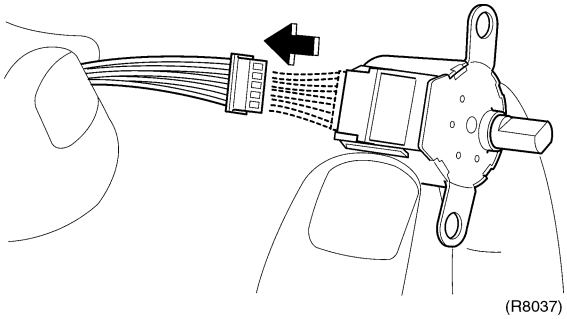	■ The connector of the swing motor has a hook. Press the hook with a flat screwdriver to unfasten it. 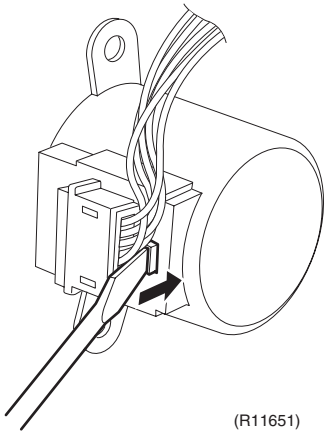
3. Remove the display PCB.			
1	Unfasten the hook, and release the display PCB ASSY.	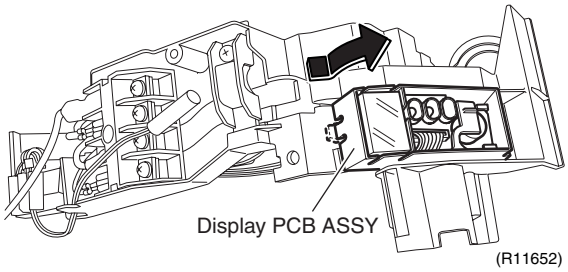	
2	Turn over the display PCB ASSY, and unfasten the 3 hooks to remove the display PCB.	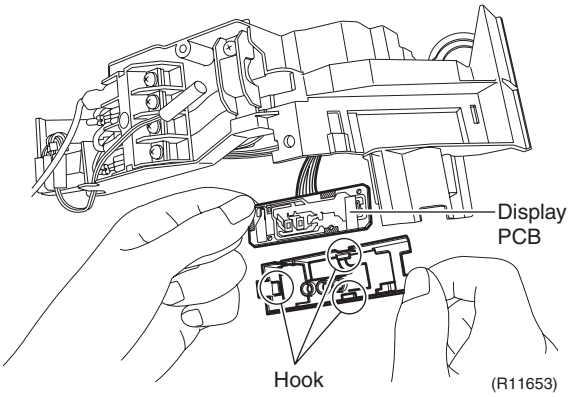	

Step	Procedure		Points
3	Disconnect the connector [S27] from the display PCB.	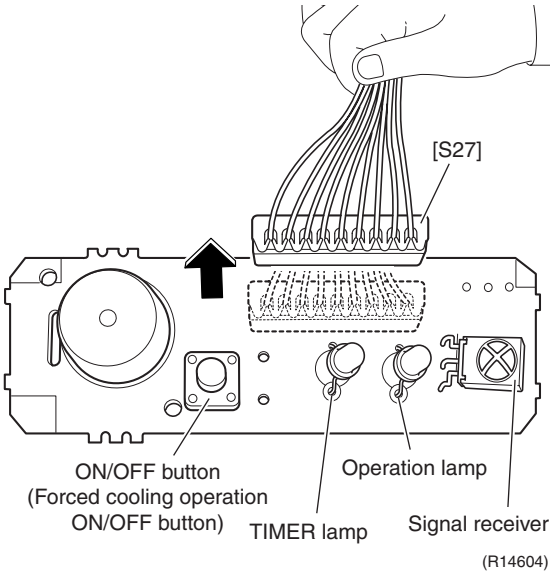	
4	The figure shows the component parts of the display PCB.		[S27]: for control PCB
4. Remove the control PCB.			
1	Lift the shield plate (1) and unfasten the 2 hooks.	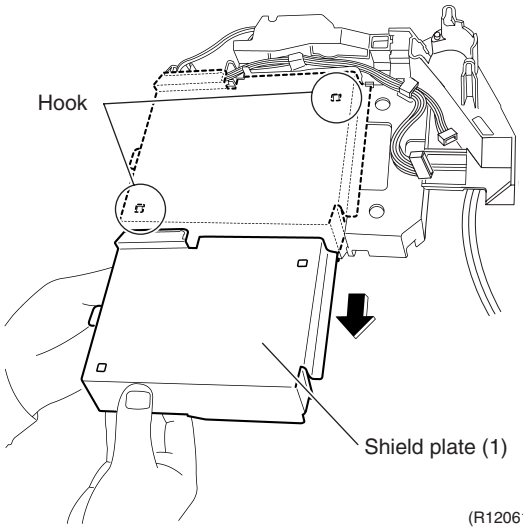	
2	Slide the shield plate (1) and remove it.		
3	Release the harnesses from the hooks.	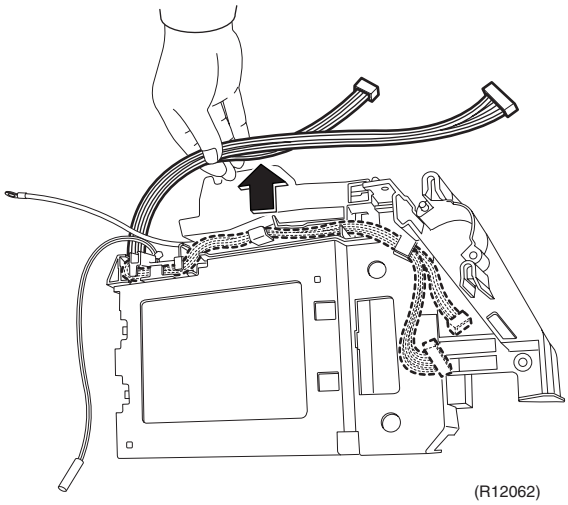	

Step	Procedure		Points
4	Disconnect the terminals from the terminal board with pliers.	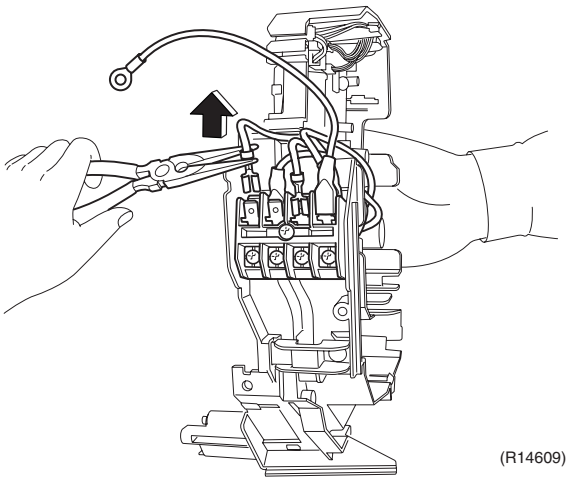 (R14609)	1 : black, upper 2 : white, lower 3 : red, upper ⏚ : green without sleeve (upper) green with sleeve (lower)
5	Release the 4 hooks. Lift up the upper part of the control PCB and remove it.	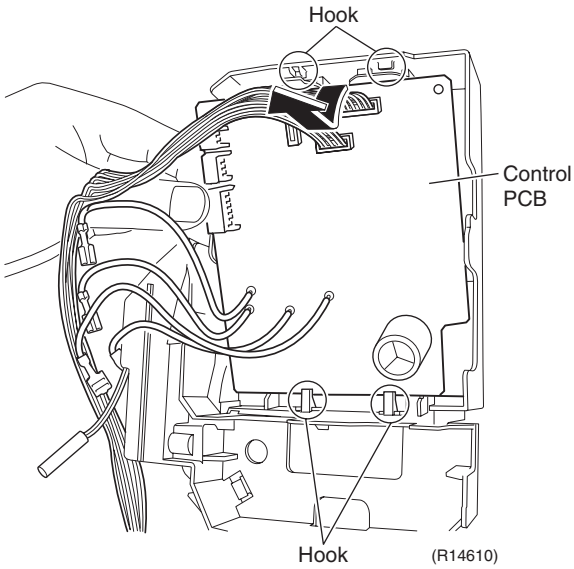 (R14610)	
6	The figure shows the control PCB.	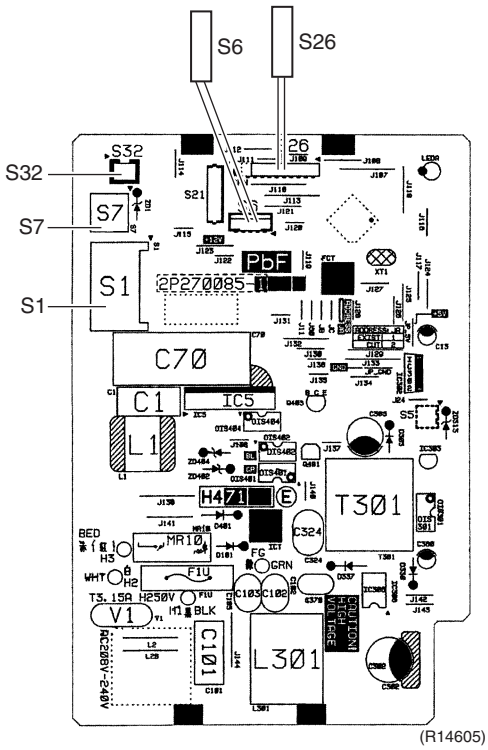 (R14605)	■ Refer to page 7 for detail. [S1] [S7]: fan motor [S6]: swing motor [S26]: display PCB [S32]: indoor heat exchanger thermistor

1.7 Removal of Indoor Heat Exchanger

Procedure

Warning **Be sure to wait for 10 minutes or more after turning off all power supplies before disassembling work.**

Step	Procedure		Points
1. Disconnect the refrigerant piping.			**Preparation** ■ Remove the electrical box according to the “Removal of Electrical Box / Vertical Blades”.
1	Remove the screws which fix the indoor unit to the installation plate.	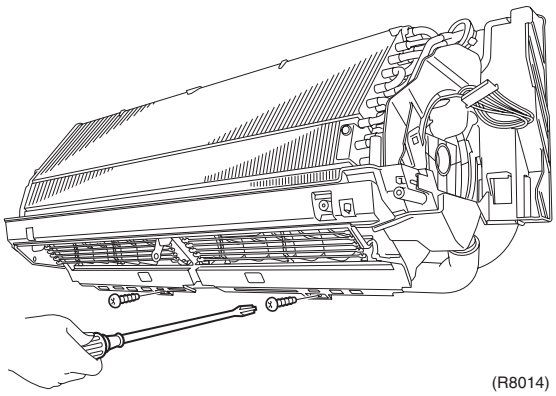 (R8014)	**Caution** **Be sure to stop the compressor before disconnecting the refrigerant pipe. If the refrigerant pipe is disconnected with the compressor running and the stop valve opened, air may be sucked in to generate an over-pressure in the refrigeration cycle, thus resulting in pipe rupture or accidental injury.**
2	Lift the indoor unit with a wooden base.	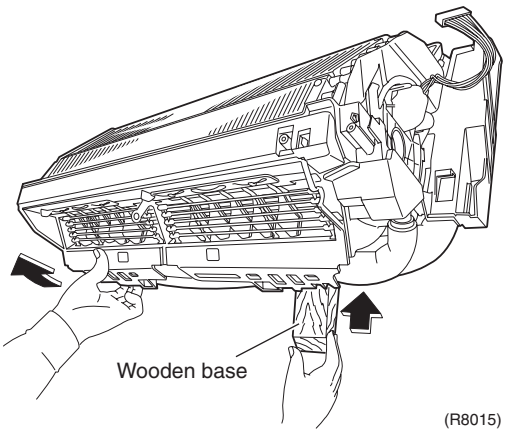 (R8015)	■ If the drain hose is embedded in the wall, disconnect the drain hose beforehand.
3	Pull out the drain hose.	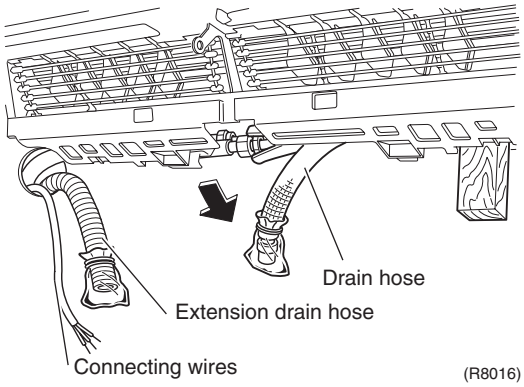 (R8016)	■ Place a plastic sheet under the drain hose as remaining drain may leak.
4	Disconnect the flare nut for gas piping with 2 wrenches.	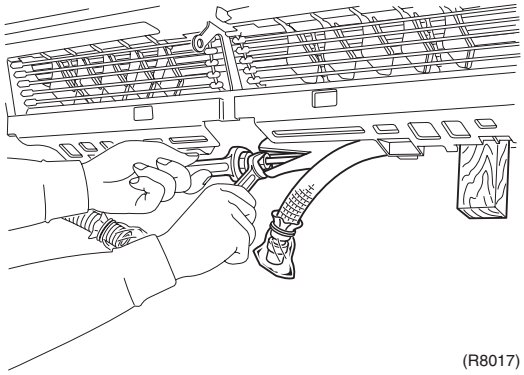 (R8017)	**Caution** **From the viewpoint of global environmental protection, make sure to use a vacuum pump for air purging.** ■ When the pipings are disconnected, protect the both openings from entering moisture.

Step	Procedure		Points
5	Disconnect the flare nut for liquid piping with 2 wrenches.	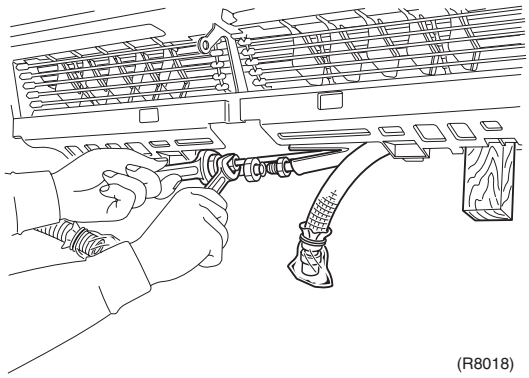 (R8018)	
2. Remove the indoor heat exchanger.			
1	Remove the indoor unit from the installation plate.	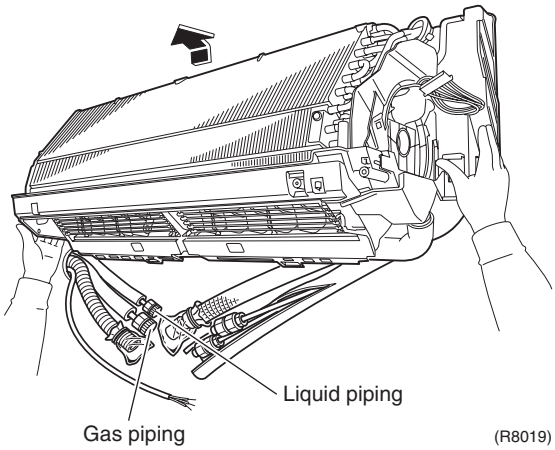 (R8019)	
2	Unfasten the hook of the piping fixture on the back of the indoor unit.	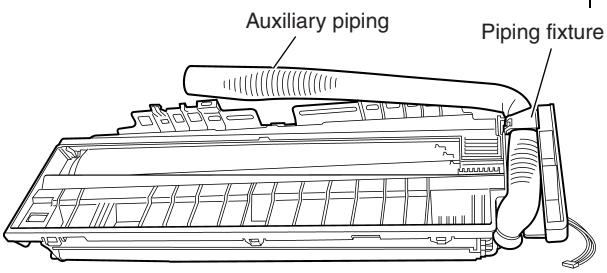 (R8038) 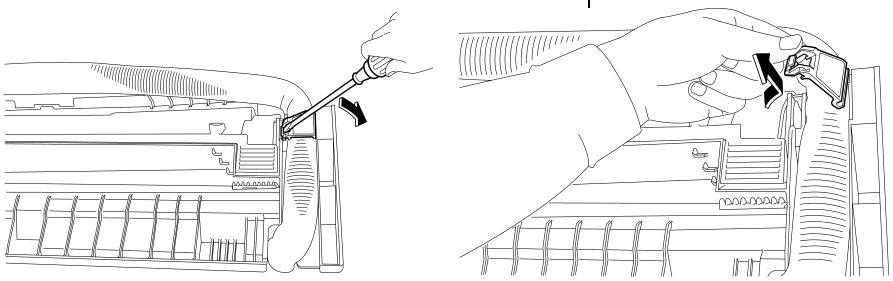 (R8039)	

Step	Procedure		Points
3	Widen the auxiliary piping to the extent of 10° ~ 20°.	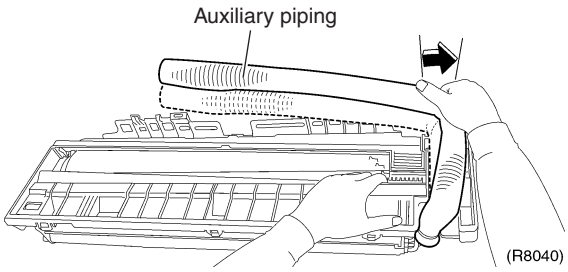	
4	Remove the screw on the left side and unfasten the hook on the rear side.	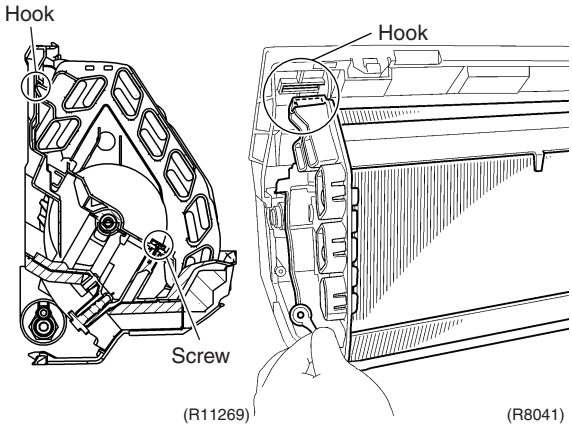	⚠ **Caution** **When removing or reassembling the indoor heat exchanger, be sure to wear gloves or wrap it with cloth before proceeding to the work. (You may be injured by the fins.)**
5	Push and unfasten the hook on the right side and lift up the indoor heat exchanger.	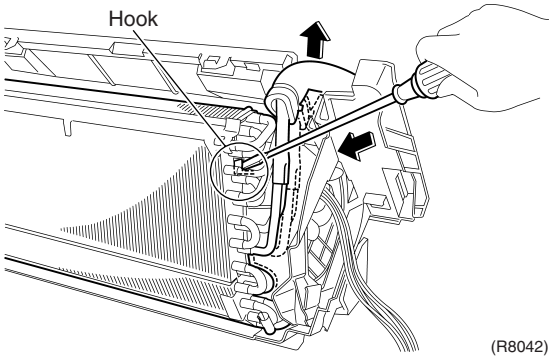	
6	Pull the indoor heat exchanger to the front side to unfasten the hooks completely, and then remove it.	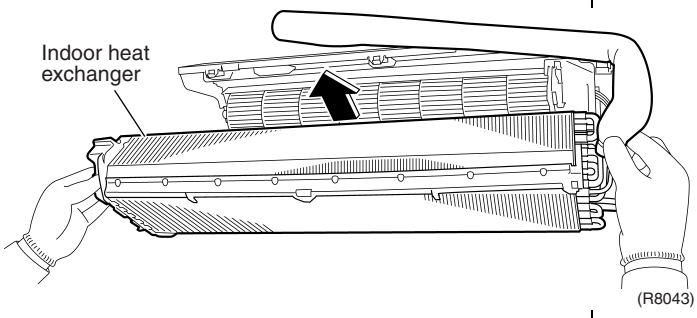	

1.8 Removal of Fan Rotor / Fan Motor

Procedure

Warning **Be sure to wait for 10 minutes or more after turning off all power supplies before disassembling work.**

Step	Procedure		Points
1. Remove the right side panel.			**Preparation** ■ Remove the indoor heat exchanger according to the “Removal of Indoor Heat Exchanger”.
1	Remove the screw of the right side panel.	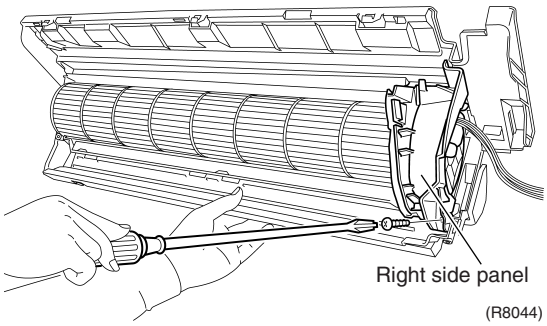	
2	Unfasten the hook of the right side panel.	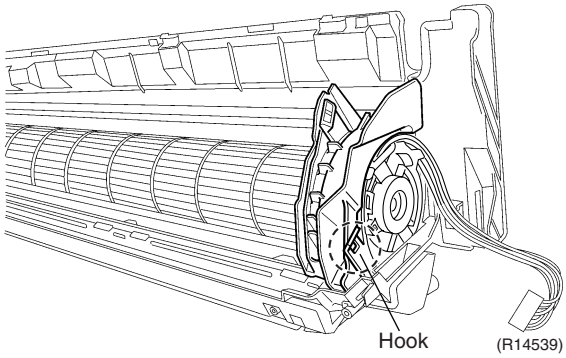	
3	Remove the right side panel.	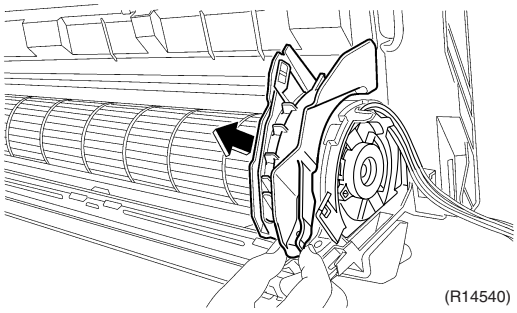	

Step	Procedure	Points
2. Remove the fan rotor and the fan motor.		
1	The fan motor has 3 projections. The fan rotor has a rotating shaft on the left side.	
2	Remove the fan rotor.	
3	Press the bearing from outside.	
4	Remove the bearing.	

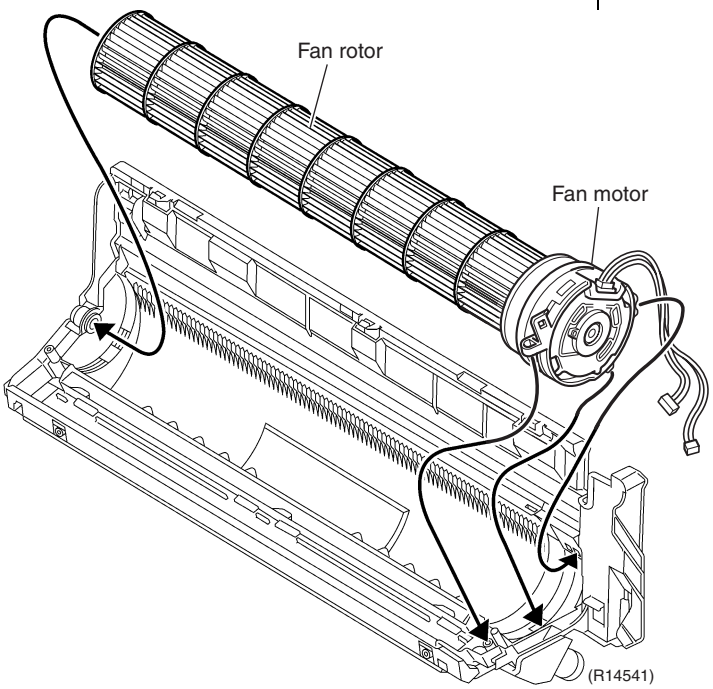

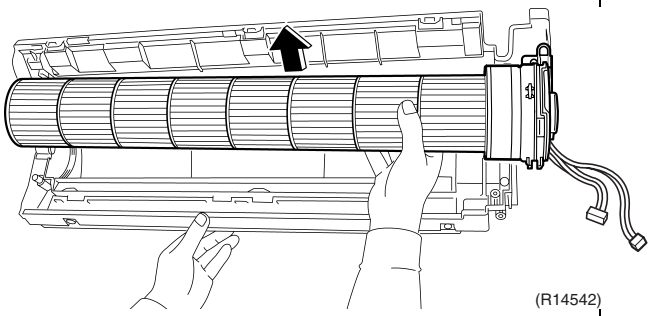

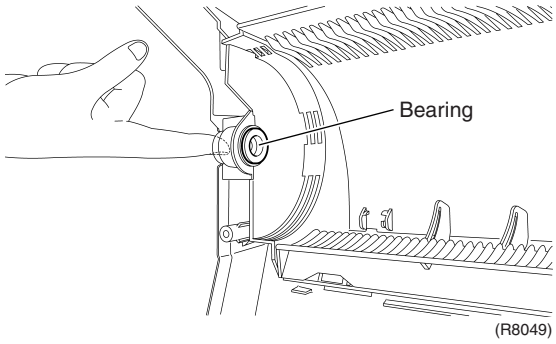

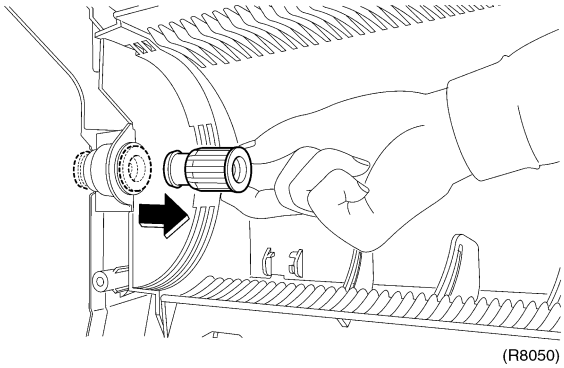

Step	Procedure		Points
5	Loosen the lock screw and remove the fan motor.	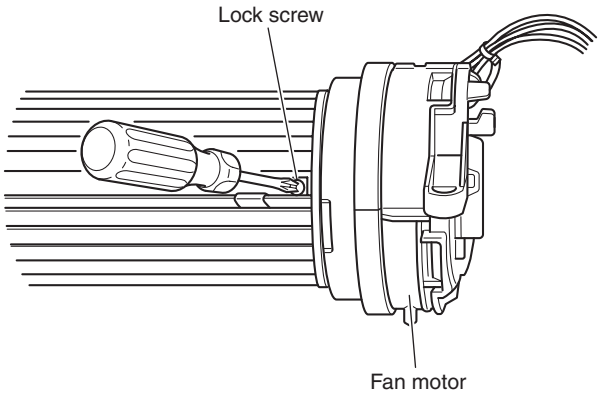 (R14544)	■ When reassembling the fan rotor, provide as much as 5 mm of play between the side face of the rotor and the bottom frame. 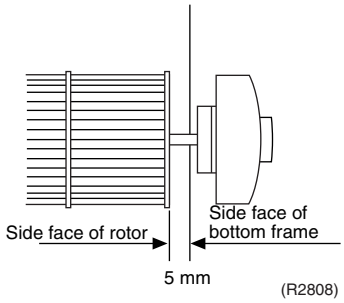 (R2808) 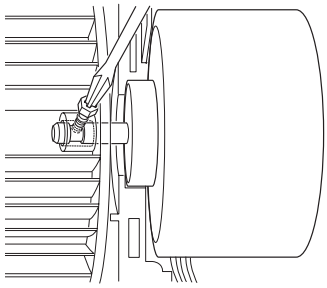 (R9582) (1) Insert the fan motor with approx. 5 mm left. (2) Tighten the screw until it stops. Then turn the screw in one scroll. (3) Move the fan rotor and confirm the fan motor and the fan rotor are installed appropriately. (4) Tighten the screw completely if appropriate. (5) If not appropriate, go back to (1).
6	Pull out the fan motor from the fan rotor.	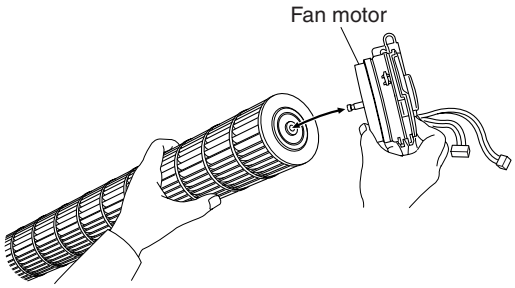 (R14543)	

1.9 Exchange of Drain Hose (Piping Direction)

Procedure ⚠ **Warning** **Be sure to wait for 10 minutes or more after turning off all power supplies before disassembling work.**

Step	Procedure		Points
1	Remove the heat insulation fixing screw on the right side and remove the drain hose.	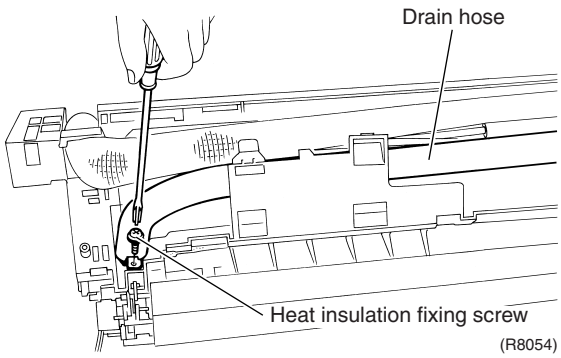 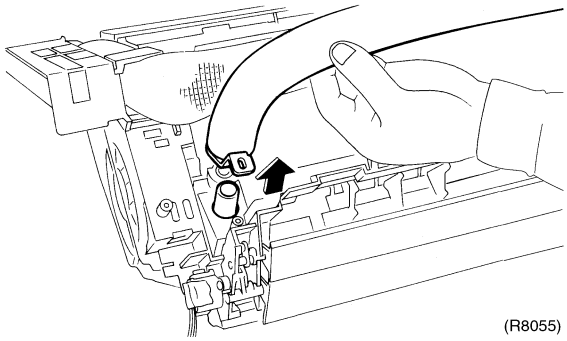	
2	Remove the drain plug located at the left side with pliers and insert the removed drain plug into the right side with a hexagonal wrench (4 mm).	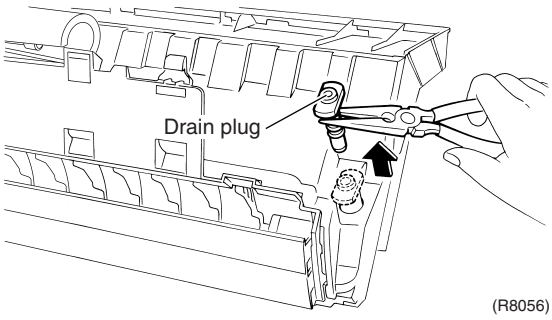	
3	Insert the drain hose to the left side, and tighten it with the heat insulation fixing screw.	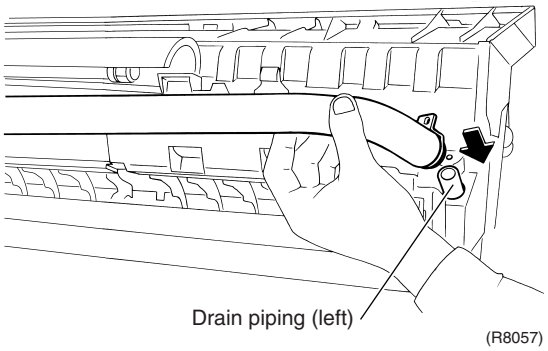	⚠ **Caution** **Do not thrust in the drain plug with a sharp-pointed tool like a screwdriver. (The drain plug may be broken, resulting in water leakage.)** ■ After removing the drain hose, to prevent water leakage, make sure to mount the heat insulation fixing screw as it was.

2. Outdoor Unit

2.1 Removal of Outer Panels

Procedure

Warning **Be sure to wait for 10 minutes or more after turning off all power supplies before disassembling work.**

Step	Procedure	Points
1. Appearance features	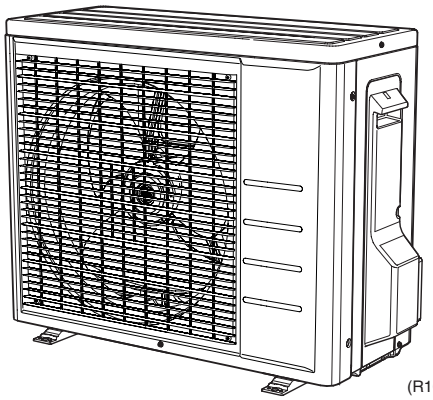 (R10707) 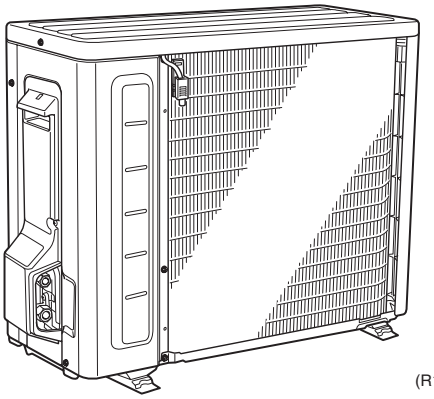 (R14485)	■ Take care not to cut your finger by the fins of the outdoor heat exchanger.
2. Remove the panels.		
1 Remove the screw of the stop valve cover. Pull down the stop valve cover and remove it.	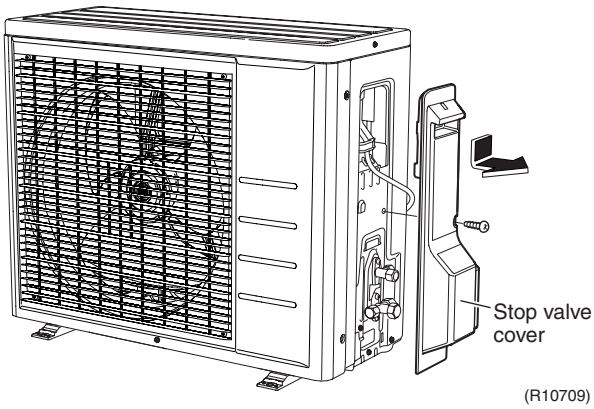 (R10709) 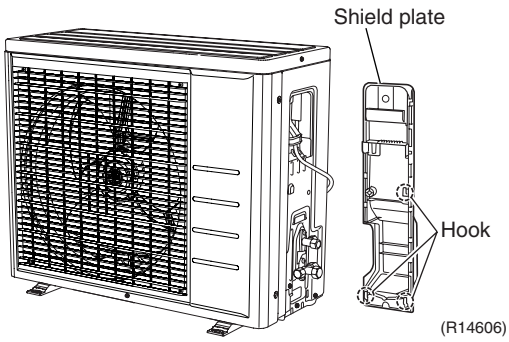 (R14606)	■ The stop valve cover is united with the shield plate. ■ When reassembling, make sure to fit the 3 hooks.

Step	Procedure		Points
2	Remove the 3 screws (right: 1 screw, left: 2 screws) and remove the top panel.	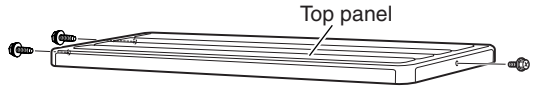	
3	Remove the 5 screws of the front panel.	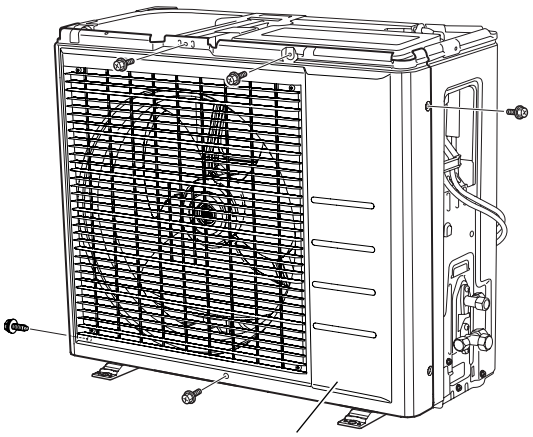 (R14486)	
4	Unfasten the right side hooks.	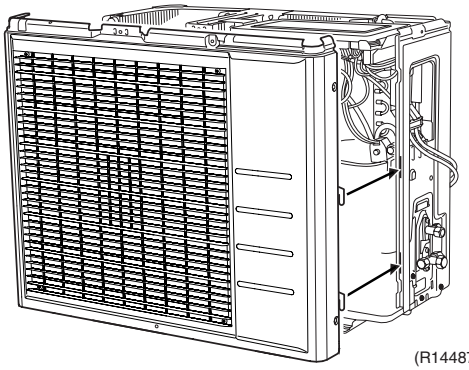 (R14487)	
5	Unfasten the left side hooks and remove the front panel.	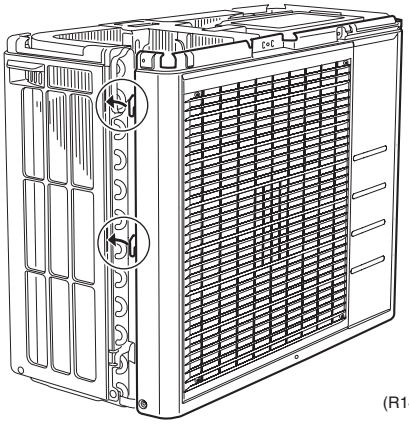 (R14488)	
6 7	Remove the 4 screws of the discharge grille. Unfasten the 6 hooks and remove the discharge grille.	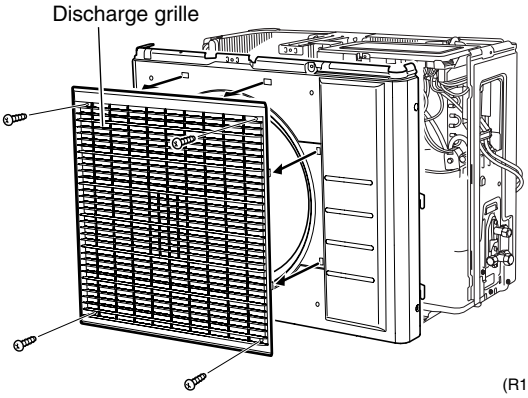 (R14489)	

2.2 Removal of Outdoor Fan / Fan Motor

Procedure

Warning **Be sure to wait for 10 minutes or more after turning off all power supplies before disassembling work.**

Step	Procedure		Points
1. Remove the outdoor fan.		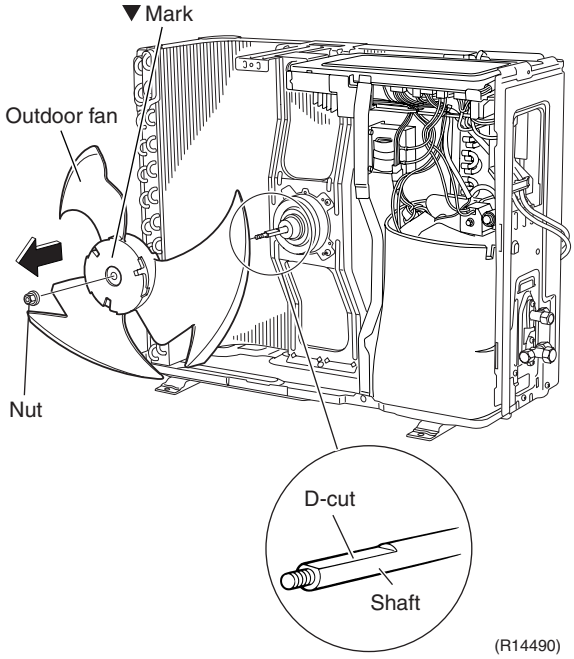	**Preparation** ■ Remove the panels according to the “Removal of Outer Panels”. ■ Nut size: M6 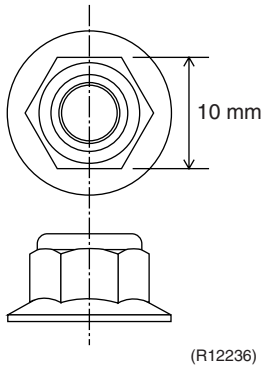 ■ When reassembling, align ▼ mark of the outdoor fan with D-cut section of the motor shaft.
1	Remove the nut of the outdoor fan.		
2	Remove the outdoor fan.		
2. Remove the fan motor.		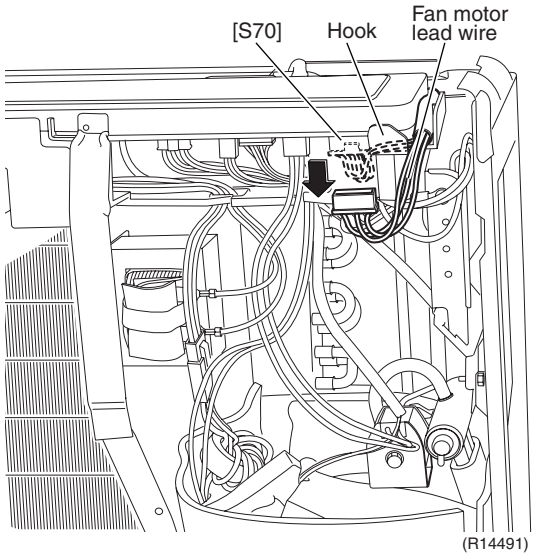	[S70]: fan motor ■ When reassembling, set the fan motor lead wire into the hook.
1	Disconnect the connector [S70] and release the fan motor lead wire from the hook.		
2	Release the fan motor lead wire from the 3 hooks.	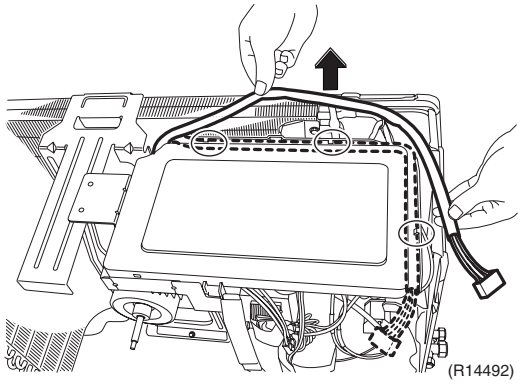	■ When reassembling set the fan motor lead wire into the 3 hooks.

Step	Procedure		Points
3	Remove the screw and remove the fan motor fixing frame.	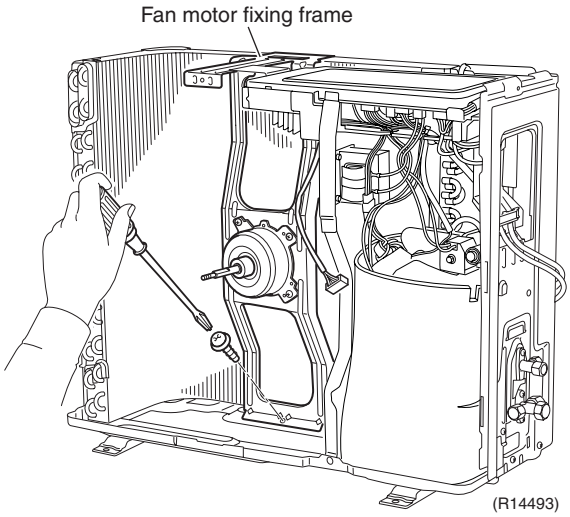	■ When reassembling, put the fan motor lead wire through the back of the fan motor so as not to be entangled with the outdoor fan. 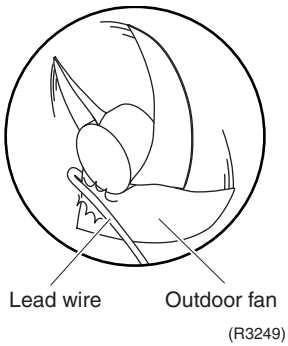
4	Release the fan motor lead wire from the hooks.	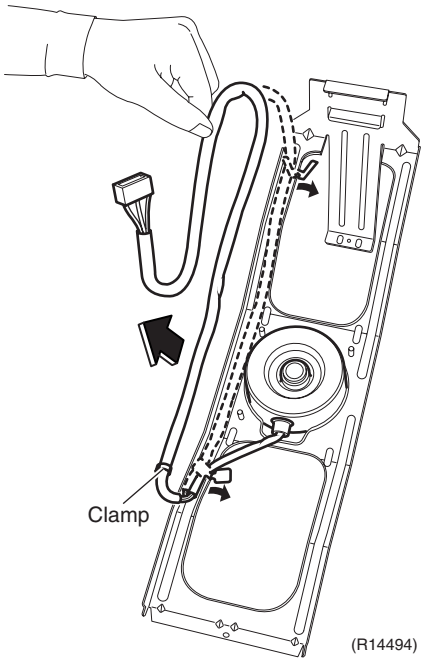	■ When reassembling, set the clamped position under the lower hook of the fan motor fixing flame.
5	Remove the 3 screws and remove the fan motor.	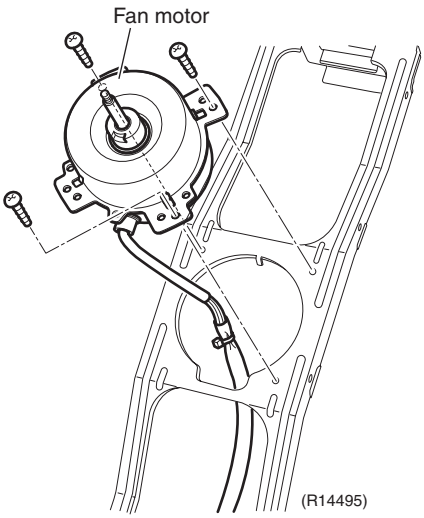	

2.3 Removal of Electrical Box / PCB

Procedure

Warning **Be sure to wait for 10 minutes or more after turning off all power supplies before disassembling work.**

Step	Procedure		Points
1. Remove the PCB.			**Preparation** ■ Remove the panels according to the “Removal of Outer Panels”.
1	Remove the screws and release the connecting wires.	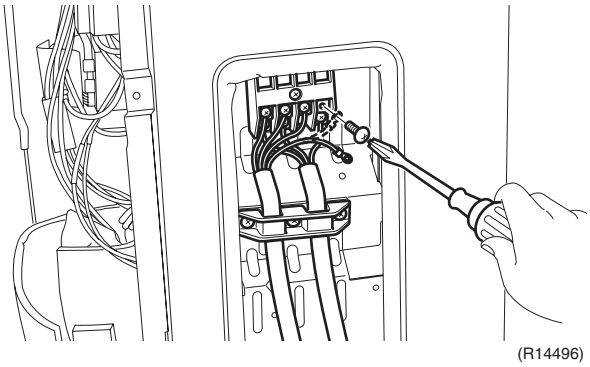 (R14496)	
2	Remove the 3 screws and remove the wire clamp.	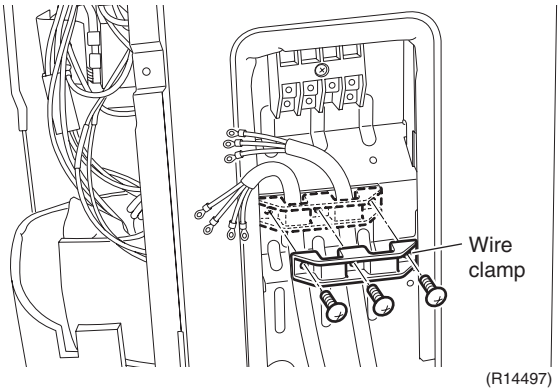 (R14497)	
3	Disconnect the connector [S70] and release the fan motor lead wire from the hook.	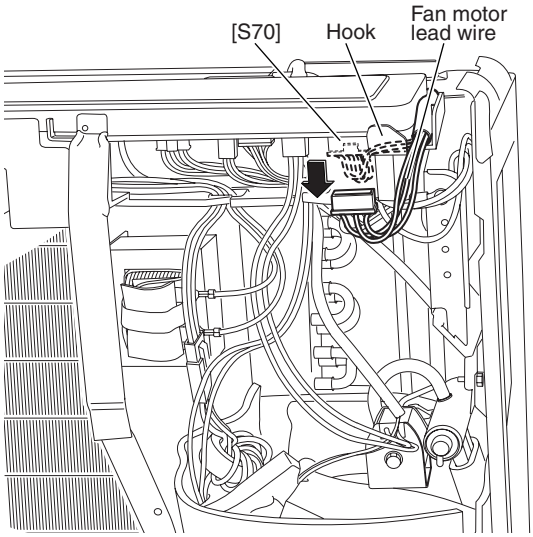 (R14491)	[S70]: fan motor
4	Release the fan motor lead wire from the 3 hooks.	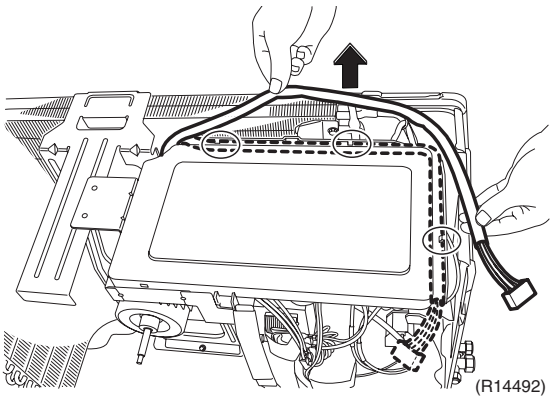 (R14492)	

Step	Procedure		Points
5	Remove the screw on the rear side of the right side panel.	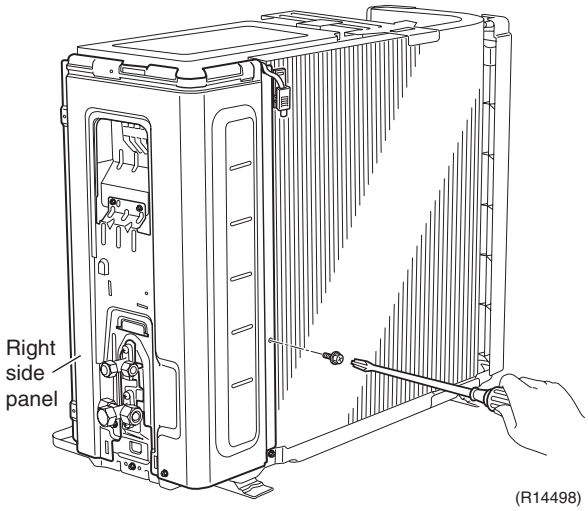	
6	Remove the 4 screws on the right side panel.	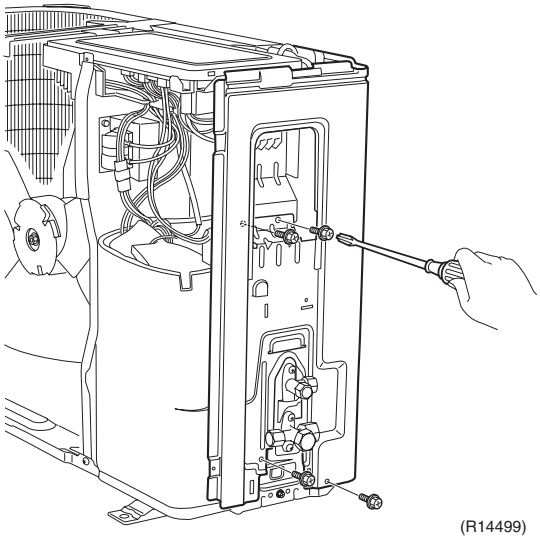	
7	Unfasten the hook on the rear side.	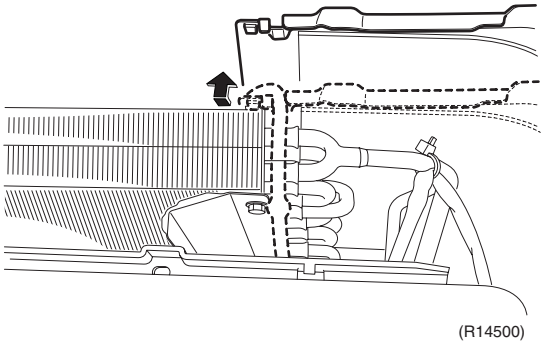	■ When reassembling, make sure to fit the hook.
8	Release the outdoor temperature thermistor from the outdoor heat exchanger.	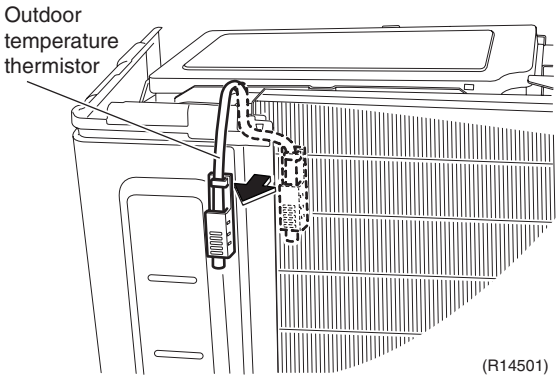	

Step	Procedure		Points
9	Unfasten the hook, and remove the right side panel.	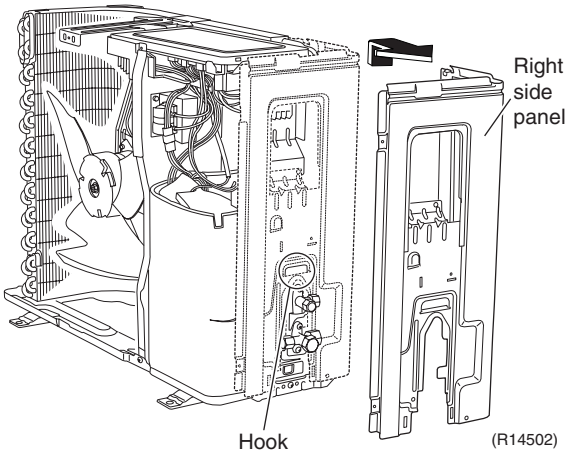	
10	Pull out the terminals from the terminal board except the earth.	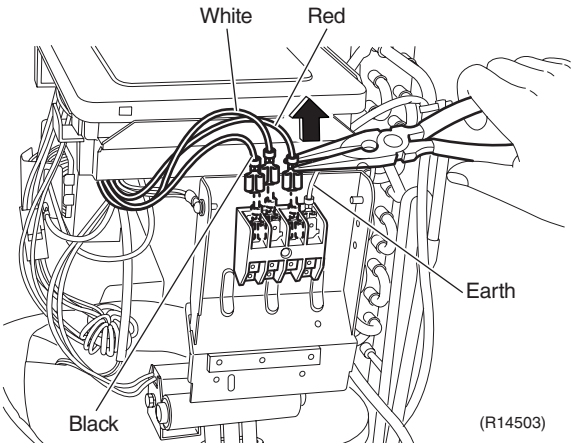	1 : black, upper 2 : white, lower 3 : red, upper ⏚ : green, lower
11	Remove the screw and release the earth.	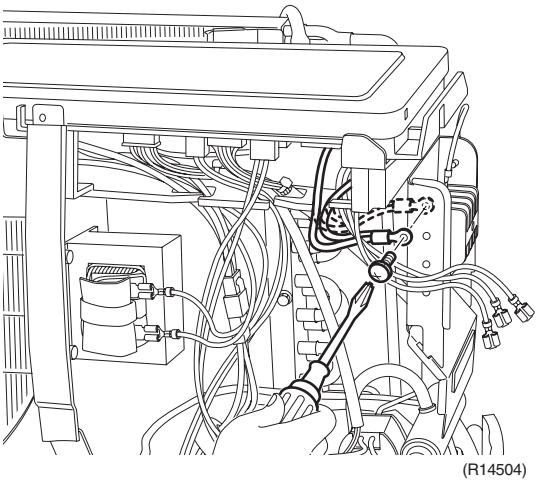	
12	Disconnect the connector [S80].	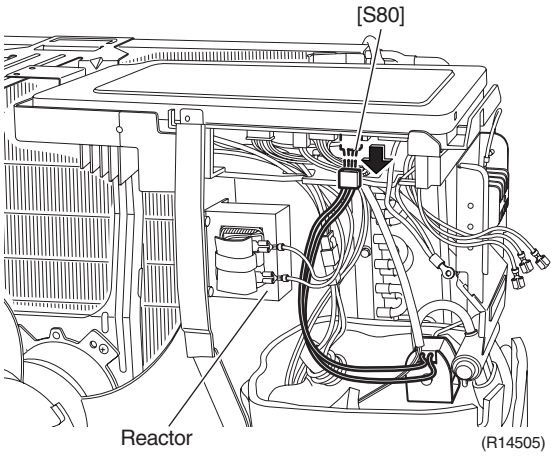	[S80]: four way valve coil ■ The harness of the four way valve coil and the harness of the reactor cross each other.

Step	Procedure		Points
13	Disconnect the connector [S20], [S40], [S90].	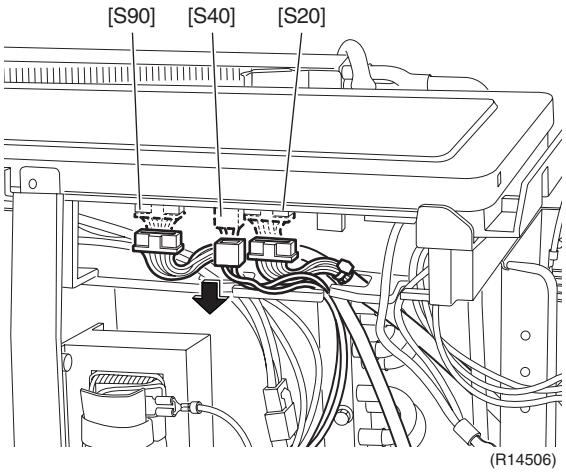	[S20]: electronic expansion valve coil [S40]: overload protector [S90]: thermistors
14	Release the harnesses of [S20], [S40], [S90] from the groove.	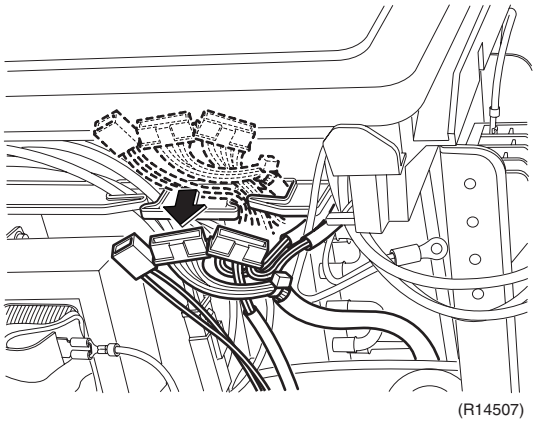	
15	Disconnect the terminals of the reactor.	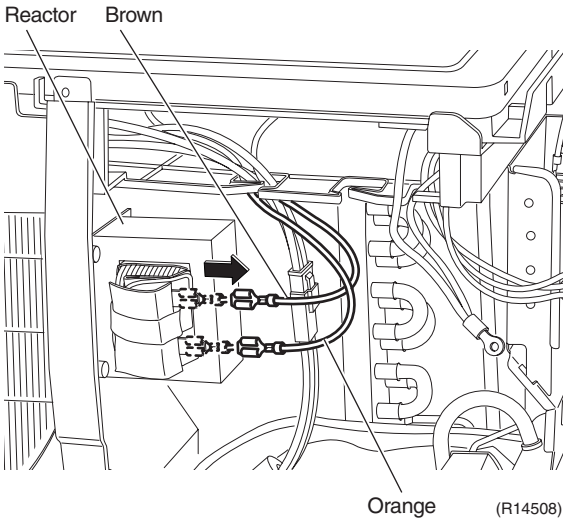	
16	Disconnect the relay connector of the compressor.	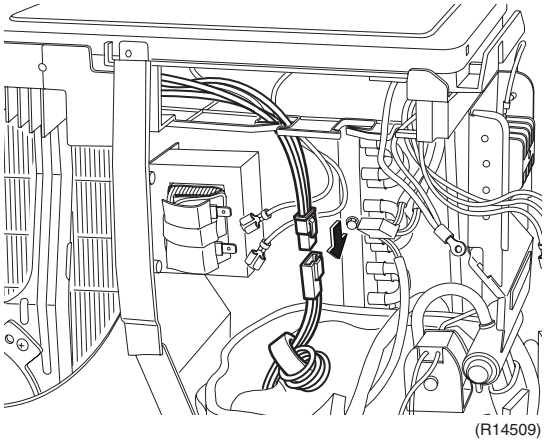	

Step	Procedure		Points
17	Release the harnesses of the relay connector and the reactor from the groove.	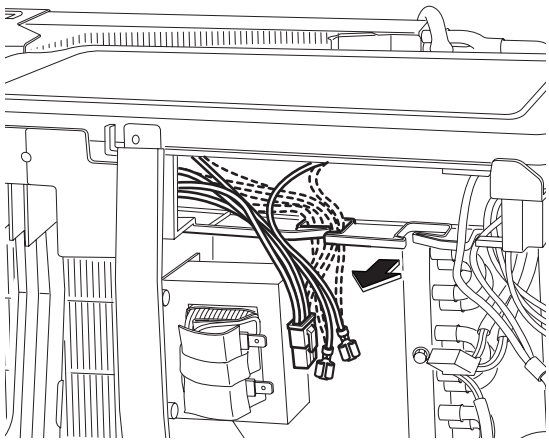 (R14510)	
18	Release the lead wires of the power supply and the earth from the groove.	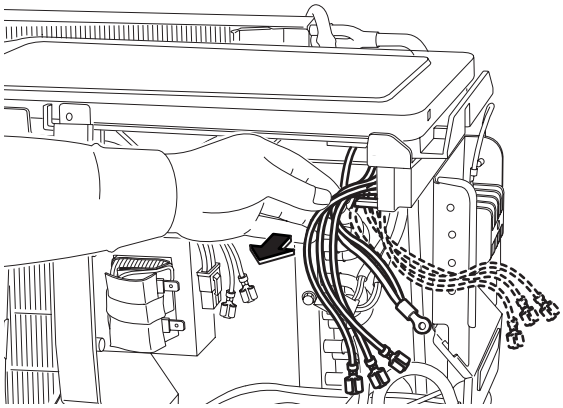 (R14581)	
19	Remove the electrical box cover and insulation sheet.	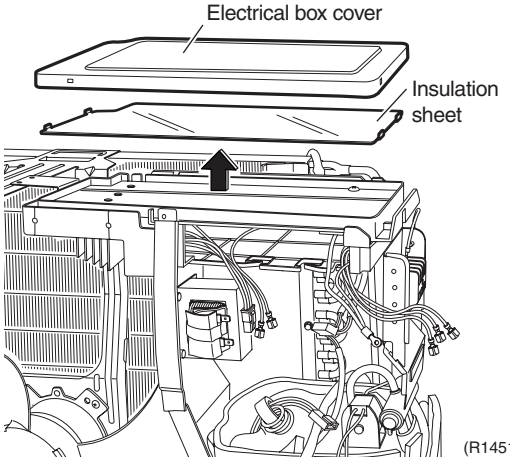 (R14511)	

Step	Procedure		Points
20	Remove the 5 screws.	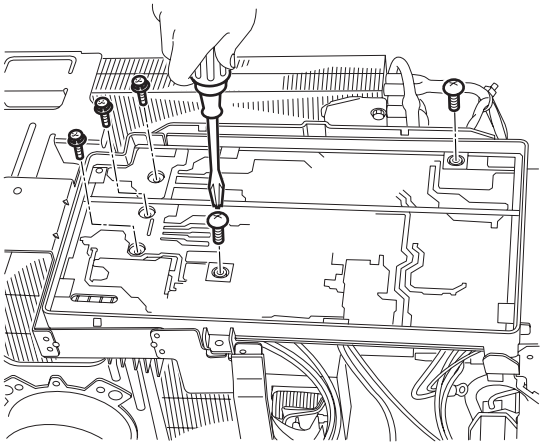 (R14512)	
21	Unfasten the hook.	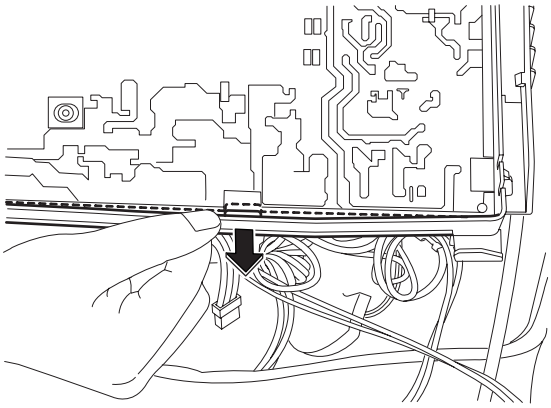 (R14513)	
22	Remove the PCB.	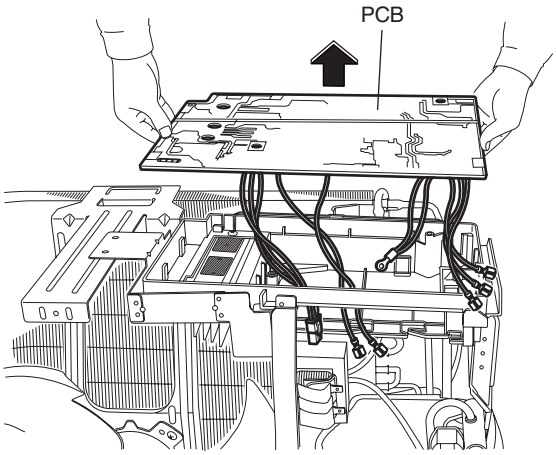 (R14514) 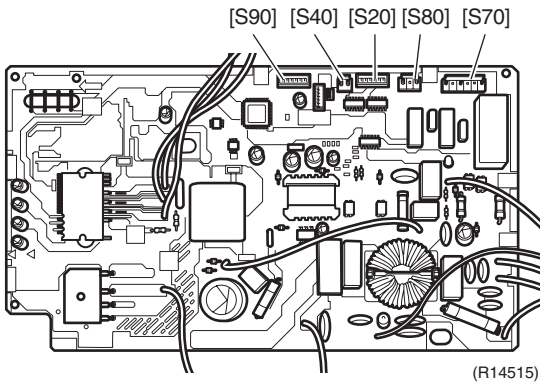 (R14515)	■ Refer to page 8 for detail. [S20]: electronic expansion valve coil [S40]: overload protector [S70]: fan motor [S80]: four way valve coil [S90]: thermistors

Step		Procedure	Points
2. Remove the electrical box.			
1	Remove the electrical box.	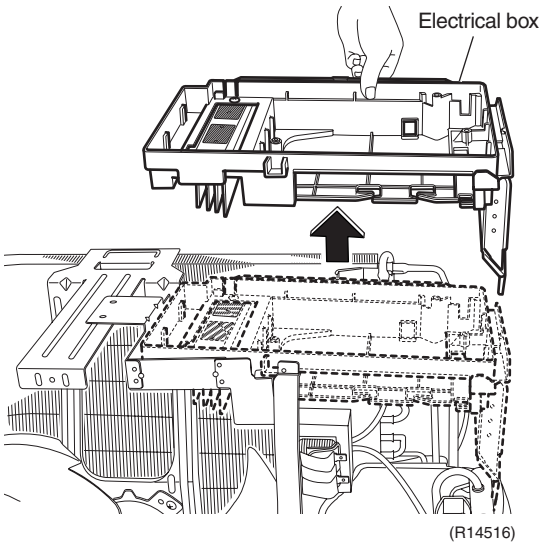	
3. Remove the reactor.			
1	Remove the 4 screws and remove the reactor.	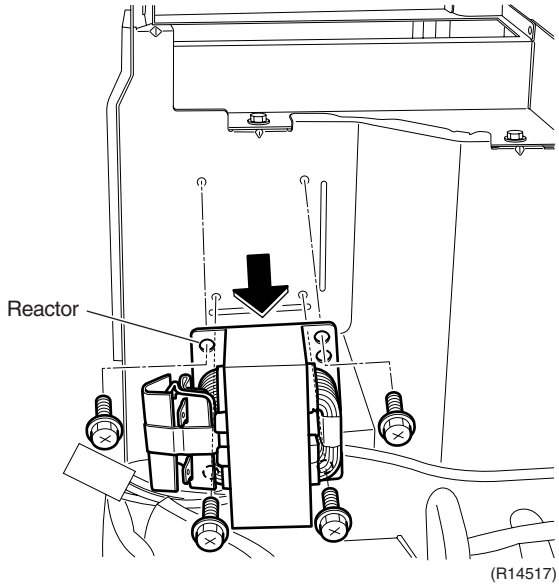	
4. Remove the thermistors.			
1	Release the discharge pipe thermistor.	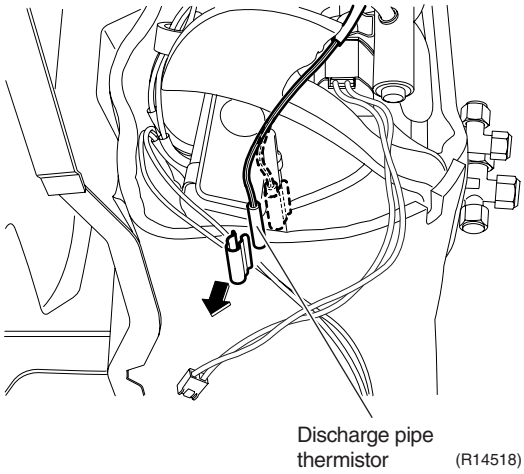	■ Pay attention so as not to lose the fixture. ■ When reassembling, do not insert the thermistor up to the dent of fixture. 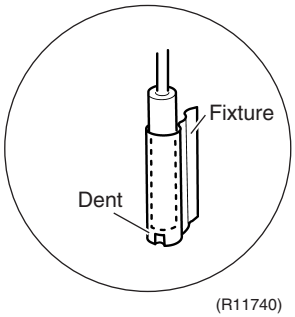

Step	Procedure		Points
2	Cut the clamp.	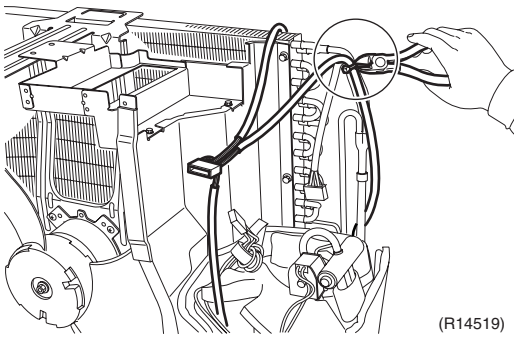 (R14519)	■ When reassembling, clamp the outdoor heat exchanger thermistor and the harness of the electronic expansion valve coil.
3	Release the outdoor heat exchanger thermistor.	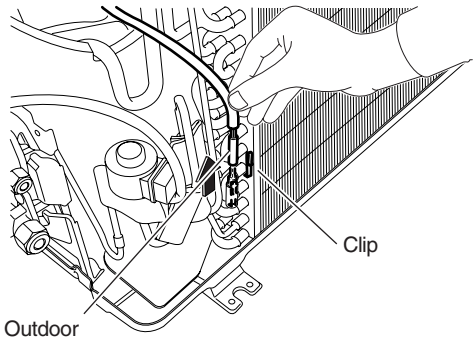 (R14520)	■ Take care not to lose the clip of thermistor. 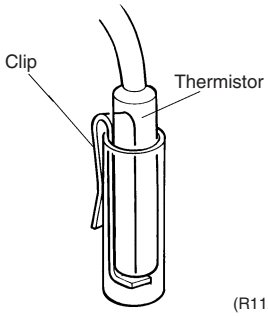 (R11268)

2.4 Removal of Sound Blankets

Procedure

Warning **Be sure to wait for 10 minutes or more after turning off all power supplies before disassembling work.**

Step	Procedure		Points
1. Remove the partition plate.			
1	Remove the 3 screws.	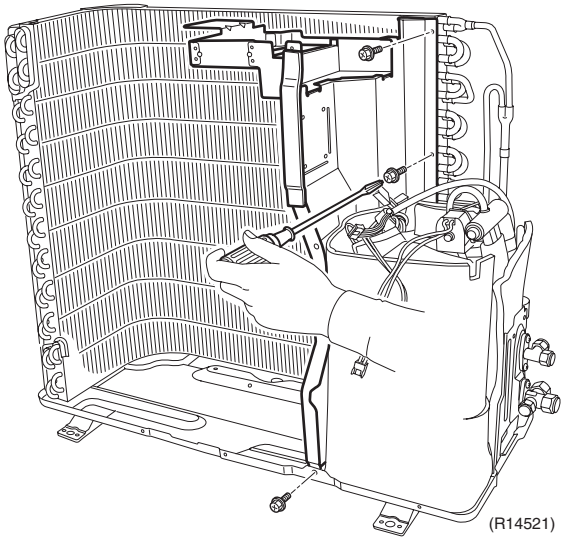 (R14521)	
2	Remove the partition plate.	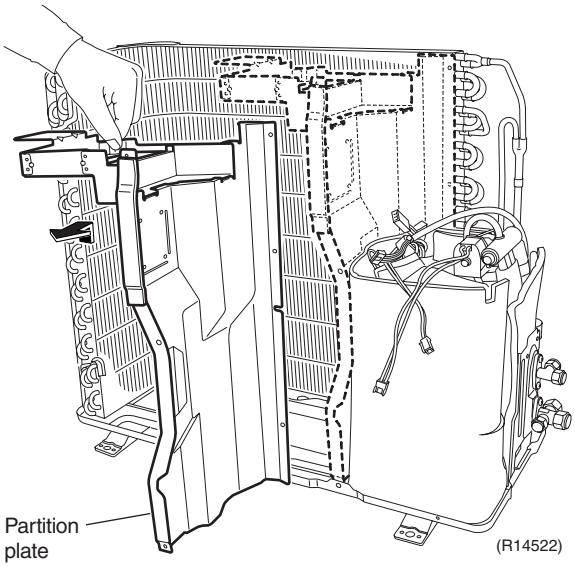 (R14522)	
		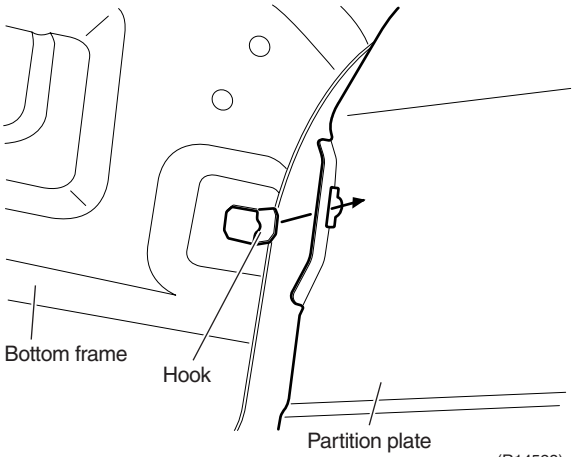 (R14523)	■ When reassembling, fit the lower hook into the bottom frame.

Step	Procedure		Points
2.	Remove the sound blankets.		■ Since the piping ports on the sound blanket are torn easily, remove the blanket carefully.
1	Lift and remove the sound blanket (top).	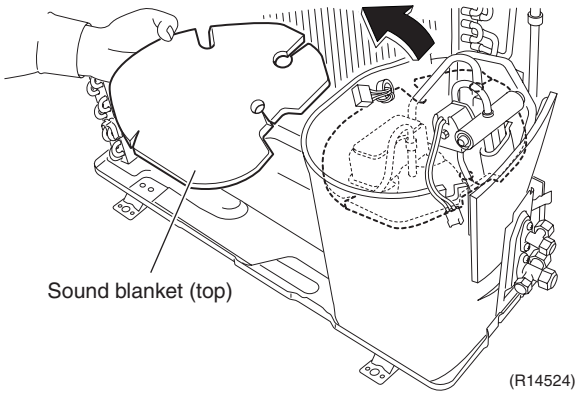	
2	Pull the sound blankets (outer and inner 2) out.	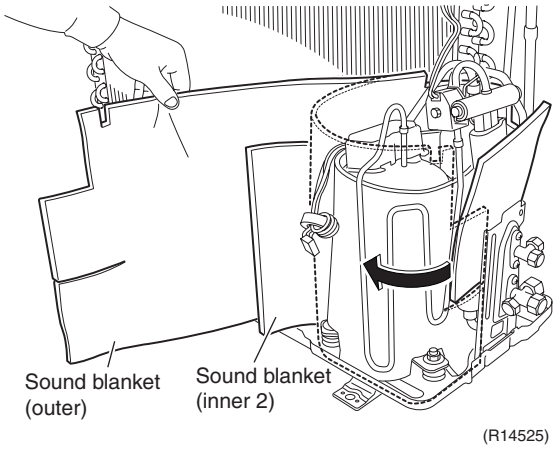	
3	Pull the sound blanket (inner 1) out.	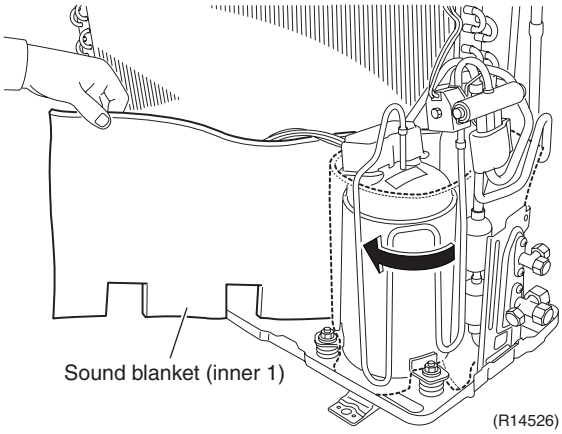	■ Since the piping ports on the sound blanket are torn easily, remove the blanket carefully.

2.5 Removal of Four Way Valve

Procedure

Warning **Be sure to wait for 10 minutes or more after turning off all power supplies before disassembling work.**

Step	Procedure		Points
1. Remove the peripheries.			
1	Remove the screw and remove the four way valve coil.	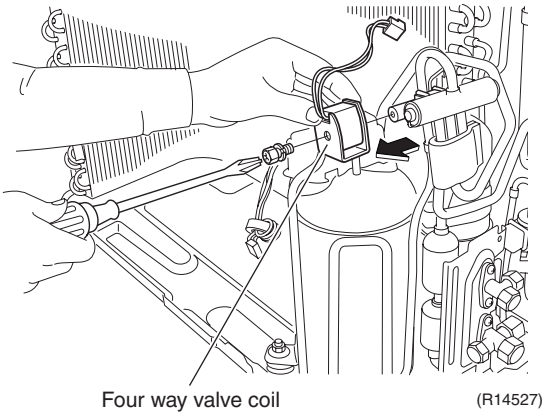	
2	Remove the terminal cover.	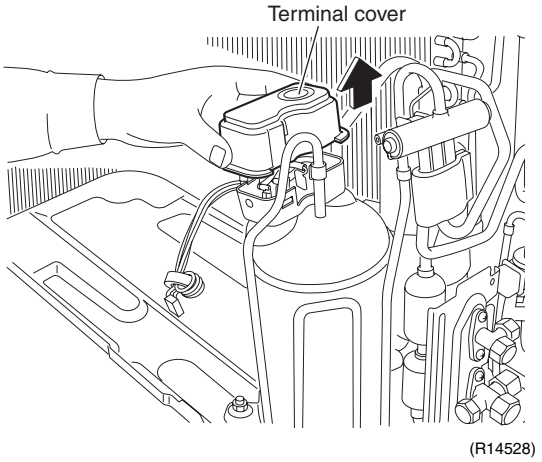	
3	Disconnect the terminals of the compressor.	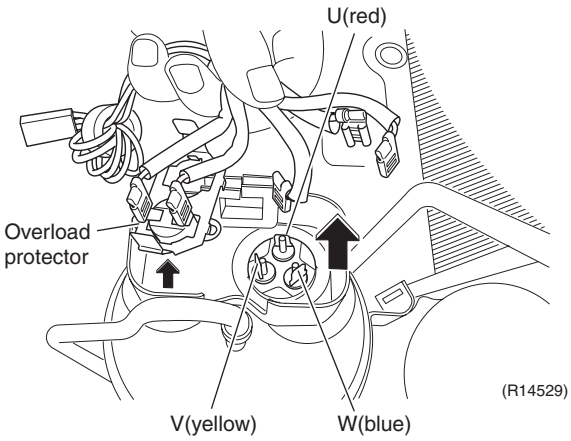	
4	Remove the overload protector.		

Step	Procedure		Points
5	Remove the protection bushing.	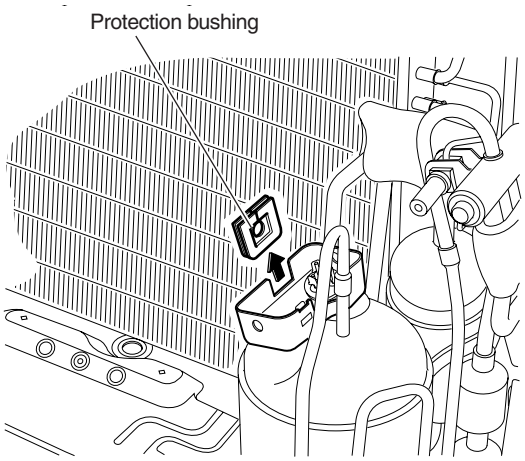 (R14530)	
6	Remove the electronic expansion valve coil.	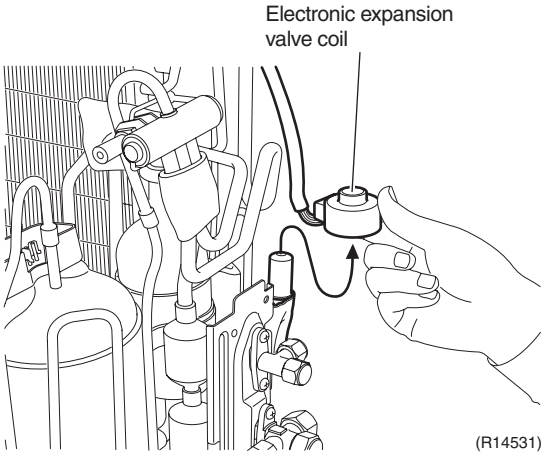 (R14531)	
7	Remove the putty.	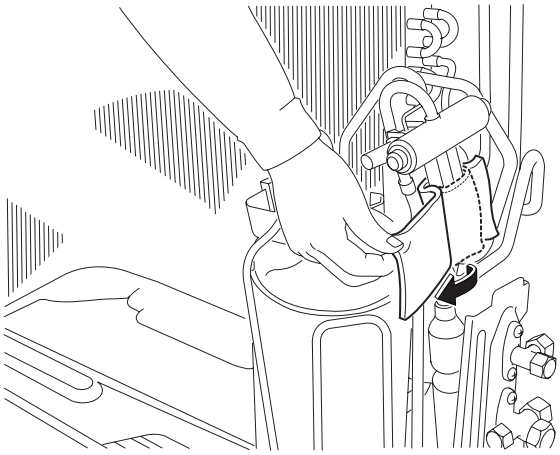 (R14532)	

Step	Procedure	Points
■ Before working, make sure that the refrigerant gas is empty in the circuit. ■ Be sure to apply nitrogen replacement when heating up the brazed part.	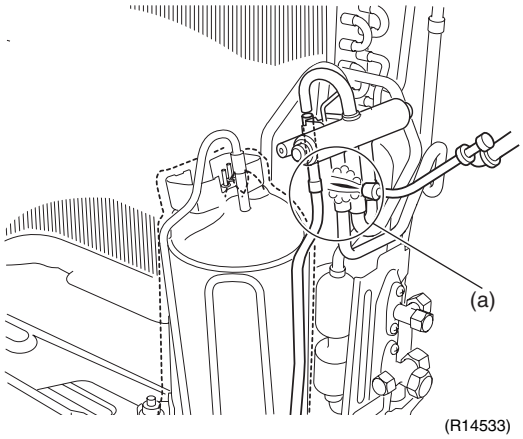	**Warning** **Be careful not to get yourself burnt with the pipes and other parts that are heated by the gas brazing machine.** **Warning** **If the refrigerant gas leaks during work, ventilate the room. (If the refrigerant gas is exposed to flames, toxic gas may be generated.)** **Caution** **From the viewpoint of global environment protection, do not discharge the refrigerant gas in the atmosphere. Make sure to collect all the refrigerant gas.** **Cautions for restoration** 1. Restore the piping by non-oxidation brazing. 2. It is required to prevent the carbonization of the oil inside the four way valve and the deterioration of the gaskets affected by heat. (Keep below 120°C.) For the sake of this, wrap the four way valve with wet cloth and provide water so that the cloth does not dry. **In case of difficulty with gas brazing machine** 1. Disconnect the brazed part where is easy to disconnect and restore. 2. Cut pipes on the main unit with a tube cutter in order to make it easy to disconnect.
2. Remove the four way valve.		
1 Heat up the brazed point (a) and withdraw the piping with pliers. 2 Heat up the 3 brazed points of the four way valve. Disconnect the point (b) first. 3 Disconnect the points (c) and (d).	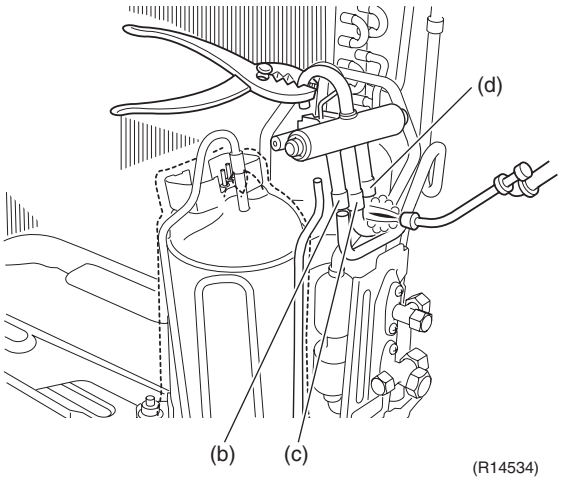	
Note: ■ Do not use a metal saw for cutting pipes by all means because the sawdust comes into the circuit. ■ When withdrawing the pipes, be careful not to pinch them firmly with pliers. The pipes may get deformed. ■ Provide a protective sheet or a steel plate so that the brazing flame cannot influence peripheries.		

2.6 Removal of Compressor

Procedure

Warning **Be sure to wait for 10 minutes or more after turning off all power supplies before disassembling work.**

Step	Procedure		Points
1	Remove the four way valve, the terminal cover and disconnect the terminals of the compressor so as not to burn them.	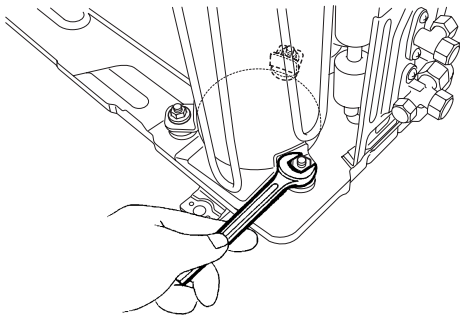 (R14535)	**Warning** **Be careful not to get yourself burnt with the pipes and other parts that are heated by the gas brazing machine.**
2	Remove the 3 nuts of the compressor.		**Warning** **If the refrigerant gas leaks during work, ventilate the room. (If the refrigerant gas is exposed to flames, toxic gas may be generated.)**
■ Before working, make sure that the refrigerant gas is empty in the circuit. ■ Be sure to apply nitrogen replacement when heating up the brazed part.		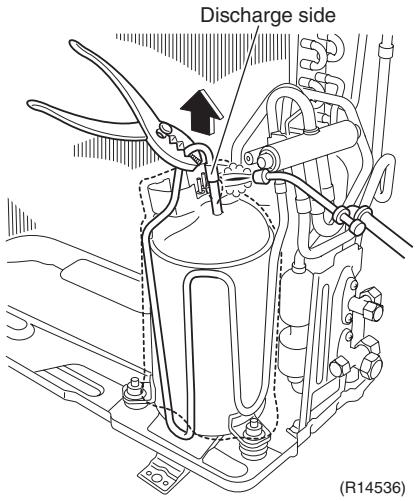 (R14536)	**Warning** **Since it may happen that the refrigerant oil in the compressor catches fire, prepare wet cloth so as to extinguish fire immediately.**
3	Heat up the brazed part of the discharge side and disconnect.		**Caution** **From the viewpoint of global environment protection, do not discharge the refrigerant gas in the atmosphere. Make sure to collect all the refrigerant gas.**
4	Heat up the brazed part of the suction side and disconnect.	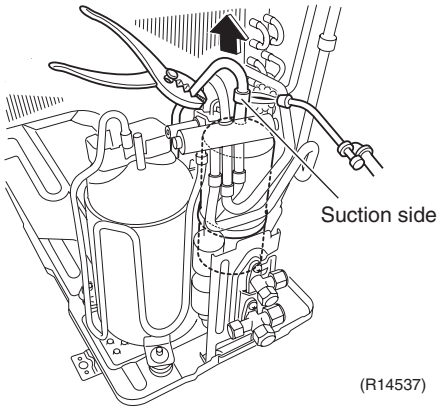 (R14537)	**Cautions for restoration** 1. Restore the piping by non-oxidation brazing. 2. It is required to prevent the carbonization of the oil inside the four way valve and the deterioration of the gaskets affected by heat. (Keep below 120°C.) For the sake of this, wrap the four way valve with wet cloth and provide water so that the cloth does not dry.
5	Lift the compressor up and remove it.		
Note: ■ Do not use a metal saw for cutting pipes by all means because the sawdust comes into the circuit. ■ When withdrawing the pipes, be careful not to pinch them firmly with pliers. The pipes may get deformed. ■ Provide a protective sheet or a steel plate so that the brazing flame cannot influence peripheries. ■ Be careful so as not to burn the compressor terminals, the name plate, the heat exchanger fin.		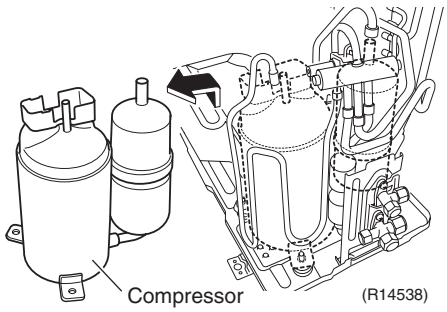 (R14538)	**In case of difficulty with gas brazing machine** 1. Disconnect the brazed part where is easy to disconnect and restore. 2. Cut pipes on the main unit with a tube cutter in order to make it easy to disconnect.

Part 8
Trial Operation and Field Settings

1. Pump Down Operation 137
2. Forced Cooling Operation 138
3. Trial Operation 139
4. Field Settings 140
   4.1 When 2 Units are Installed in 1 Room 140
   4.2 Jumper Settings 140
5. Application of Silicon Grease to a Power Transistor and a Diode Bridge 141

1. Pump Down Operation

Outline

In order to protect the environment, be sure to conduct pump down operation when relocating or disposing the unit.

Detail

1) Remove the valve caps from the liquid stop valve and the gas stop valve.
2) Carry out forced cooling operation.
3) After 5 to 10 minutes, close the liquid stop valve with a hexagonal wrench.
4) After 2 to 3 minutes, close the gas stop valve and stop the forced cooling operation.

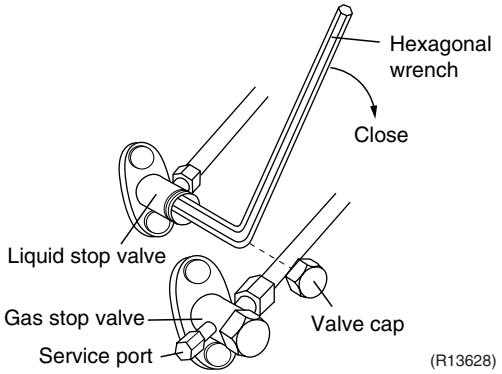

Refer to page 138 for forced cooling operation.

2. Forced Cooling Operation

Item	Forced Cooling
Conditions	The forced cooling operation is allowed when both the following conditions are met. 1) The outdoor unit is not abnormal and not in the 3-minute standby mode. 2) The outdoor unit is not operating.
Start	Press the forced cooling operation ON/OFF button (SW1) on the indoor unit for 5 seconds.
Command frequency	58 Hz
End	The forced cooling operation ends when any of the following conditions is fulfilled. 1) The operation ends automatically after 15 minutes. 2) Press the forced cooling operation ON/OFF button (SW1) on the indoor unit again. 3) Press the ON/OFF button on the remote controller.
Others	The protection functions are prior to all others in the forced cooling operation.

Indoor Unit

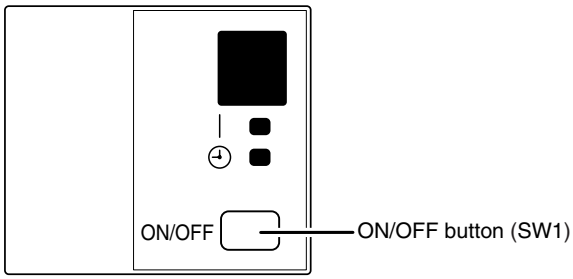

(R14578)

3. Trial Operation

Outline

1. Measure the power supply voltage and make sure that it falls in the specified range.
2. Trial operation should be carried out in either cooling or heating mode.
3. Carry out the trial operation in accordance with the operation manual to ensure that all functions and parts, such as flap movement, are working properly.

- The air conditioner requires a small amount of power in its standby mode. If the system is not to be used for some time after installation, shut off the circuit breaker to eliminate unnecessary power consumption.
- If the circuit breaker trips to shut off the power to the air conditioner, the system backs up the operation mode. The system then restarts operation with the previous mode when the circuit breaker is restored.

In cooling mode, select the lowest programmable temperature; in heating mode, select the highest programmable temperature.

- Trial operation may be disabled in either mode depending on the room temperature.
- After trial operation is complete, set the temperature to a normal level. (26°C to 28°C in cooling mode, 20°C to 24°C in heating mode)
- For protection, the system does not start for 3 minutes after it is turned off.

Detail

ARC470 Series

(1) Press the [ON/OFF] button to turn on the system.
(2) Press the center of the [TEMP] button and the [MODE] button at the same time.
(3) Press the [MODE] button twice.
(7- appears on the display to indicate that trial operation is selected.)
(4) Press the [MODE] button and select operation mode.
(5) Trial operation terminates in approx. 30 minutes and switches into normal mode. To quit a trial operation, press the [ON/OFF] button.

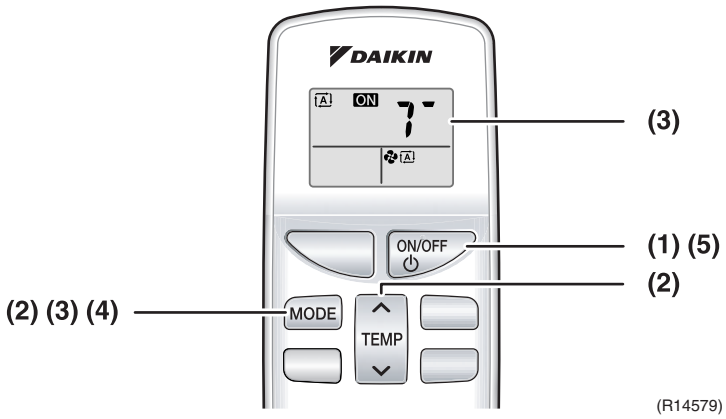

4. Field Settings

4.1 When 2 Units are Installed in 1 Room

When 2 indoor units are installed in 1 room, 1 of the 2 pairs of indoor unit and wireless remote controller can be set for different address.
Both the indoor unit PCB and the wireless remote controller need alteration.

Indoor Unit PCB

■ Cut the address setting jumper JA on the control PCB.

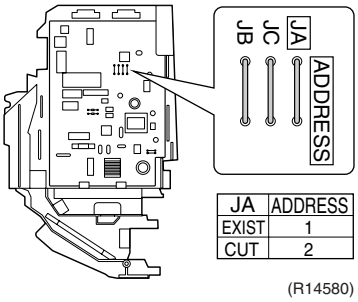

Wireless Remote Controller

■ Cut the address setting jumper.

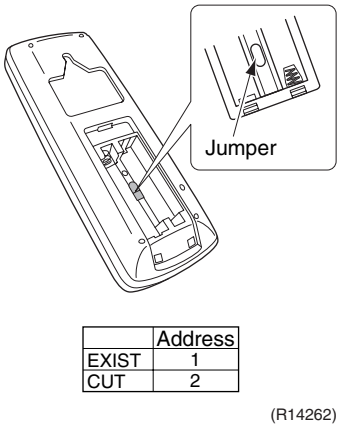

4.2 Jumper Settings

Jumper	Function	When connected (factory set)	When cut
JB (on indoor unit PCB)	Fan speed setting when compressor stops for thermostat OFF. (effective only at cooling operation)	Fan speed setting; Remote controller setting	Fan rpm is set to “0” <Fan stop>
JC (on indoor unit PCB)	Power failure recovery function	Auto-restart	The unit does not resume operation after recovering from a power failure. Timer ON/OFF settings are cleared.
J5 (on outdoor unit PCB)	Improvement of defrost performance	Standard control	Reinforced control (ex. The frequency increases, the duration time of defrost lengthens.)

For the location of the jumper, refer to the following pages.
Indoor unit; page 7
Outdoor unit; page 8

5. Application of Silicon Grease to a Power Transistor and a Diode Bridge

Applicable Models

All outdoor units using inverter type compressor for room air conditioner.

When the printed circuit board (PCB) of an outdoor unit is replaced, it is required that silicon grease (∗1) is certainly applied to the heat radiation part (the contact point to the radiation fin) of the power transistor and diode bridge.

∗1: Parts number of the silicon grease – 1172698 (Drawing number 3FB03758-1)

Details

The silicon grease is an essential article for encouraging the heat radiation of the power transistor and the diode bridge. Applying the paste should be implemented in accordance with the following instruction.

Note: There is the possibility of failure with smoke in case of bad heat radiation.

- Wipe off the old silicon grease completely on a radiation fin.
- Apply the silicon grease evenly to the whole.
- Do not leave any foreign object such as solder or paper waste between the power transistor and the radiation fin, and also the diode bridge, and the radiation fin.
- Tighten the screws of the power transistor and the diode bridge, and contact to the radiation fin without any gap.

<Example>

The shape of electrical box and PCB vary depending on the model.

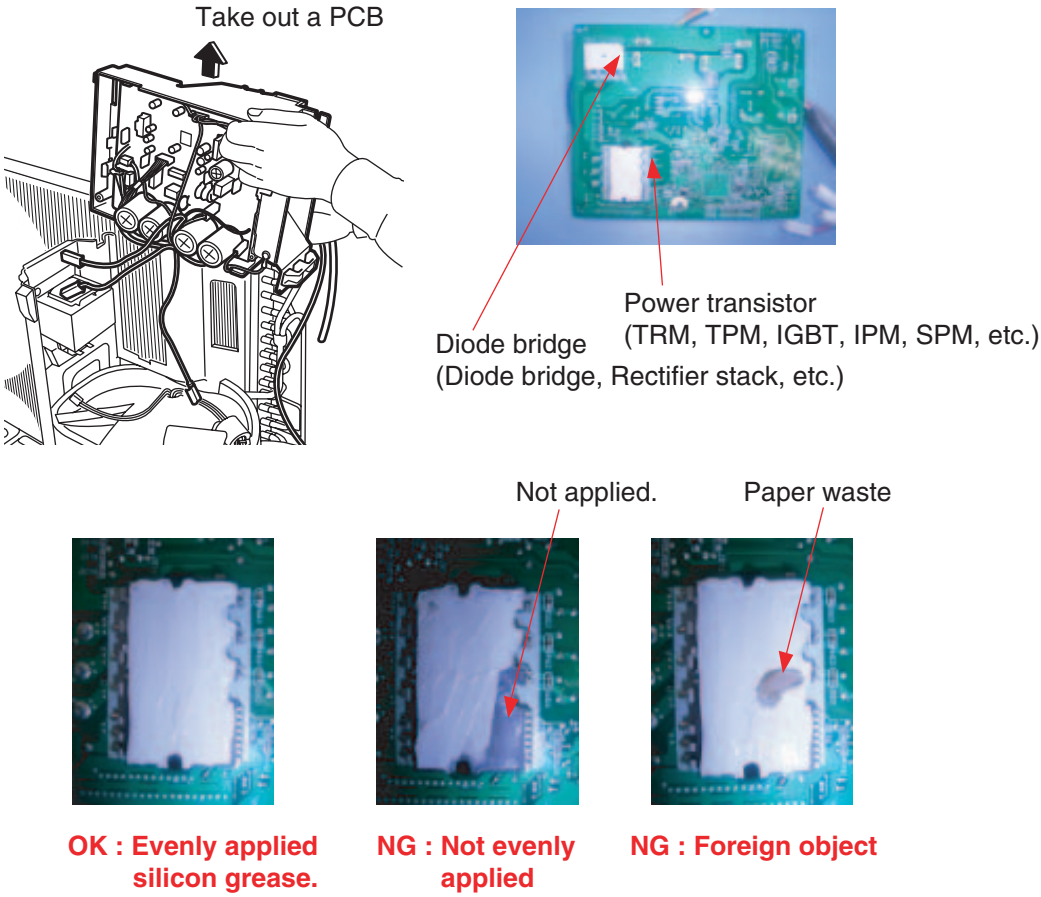

(R9056)

Part 9
Appendix

1. Piping Diagrams 143
   1.1 Indoor Unit 143
   1.2 Outdoor Unit 144
2. Wiring Diagrams 145
   2.1 Indoor Unit 145
   2.2 Outdoor Unit 146

1. Piping Diagrams

1.1 Indoor Unit

FTXN25/35KEV1B

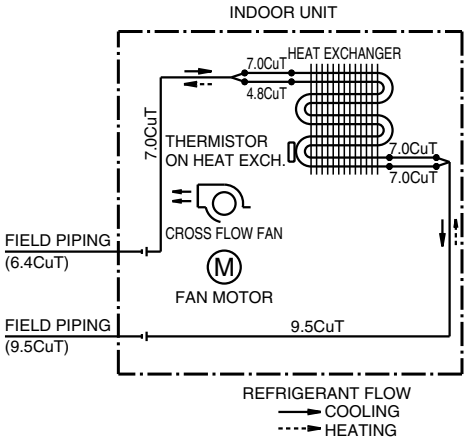

4D065938B

1.2 Outdoor Unit

RXN25KEV1B

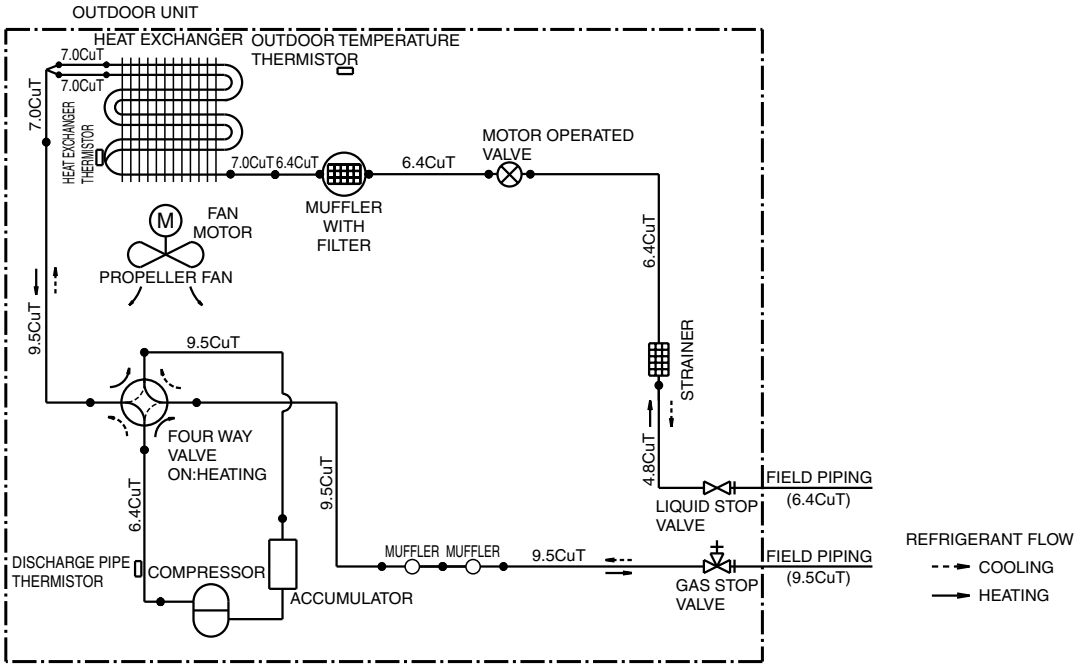

RXN35KEV1B

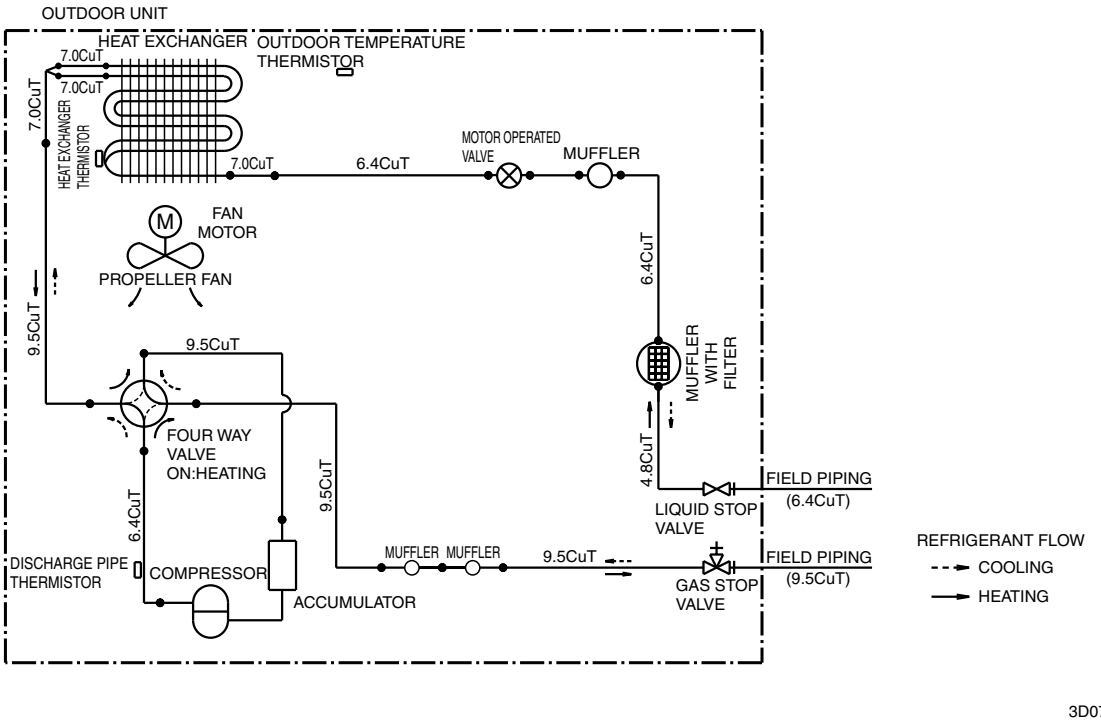

2. Wiring Diagrams

2.1 Indoor Unit

FTXN25/35KEV1B

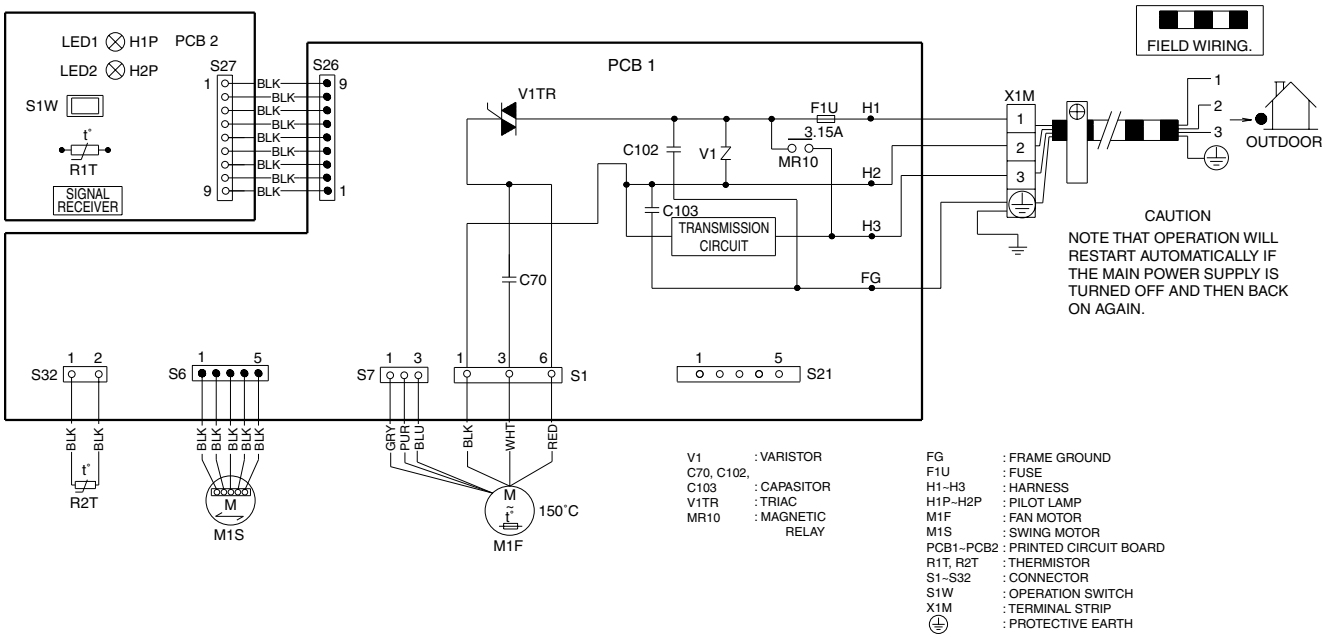

3D070952A

2.2 Outdoor Unit

RXN25/35KEV1B

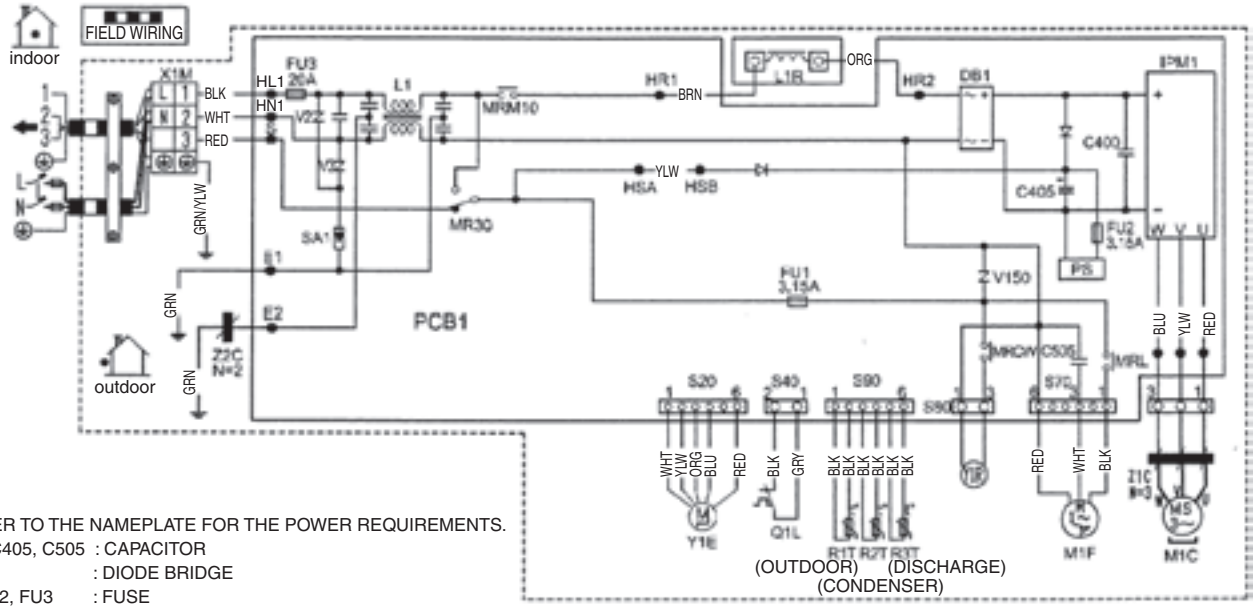

NOTE

1. REFER TO THE NAMEPLATE FOR THE POWER REQUIREMENTS.

C400, C405, C505	: CAPACITOR
DB1	: DIODE BRIDGE
FU1,FU2, FU3	: FUSE
IPM1	: INTELLIGENT POWER MODULE
L1	: COIL
L1R	: REACTOR
M1C	: COMPRESSOR MOTOR
M1F	: FAN MOTOR
MR30, MRM10	
MRCW, MRL	: MAGNETIC RELAY
Q1L	: OVERLOAD PROTECTOR
PCB1	: PRINTED CIRCUIT BOARD
S20, S40, S70	
S80, S90	: CONNECTOR
R1T, R2T, R3T	: THERMISTOR
SA1	: SURGE ARRESTER
V2, V3, V150	: VARISTOR
X1M	: TERMINAL STRIP
Y1E	: ELECTRONIC EXPANSION VALVE COIL
Y1R	: REVERSING SOLENOID VALVE COIL
Z1C, Z2C	: FERRITE CORE
PS	: POWER SUPPLY
⏚	: PROTECTIVE EARTH

3D070554B

Revision History

Month / Year	Version	Revised contents
03/2011	SiBE041102	–
06/2011	SiBE041102_A	Review of contents

Warning

- Daikin products are manufactured for export to numerous countries throughout the world. Prior to purchase, please confirm with your local authorised importer, distributor and/or retailer whether this product conforms to the applicable standards, and is suitable for use, in the region where the product will be used. This statement does not purport to exclude, restrict or modify the application of any local legislation.
- Ask a qualified installer or contractor to install this product. Do not try to install the product yourself. Improper installation can result in water or refrigerant leakage, electrical shock, fire or explosion.
- Use only those parts and accessories supplied or specified by Daikin. Ask a qualified installer or contractor to install those parts and accessories. Use of unauthorised parts and accessories or improper installation of parts and accessories can result in water or refrigerant leakage, electrical shock, fire or explosion.
- Read the User's Manual carefully before using this product. The User's Manual provides important safety instructions and warnings. Be sure to follow these instructions and warnings.

If you have any enquiries, please contact your local importer, distributor and/or retailer.

Cautions on product corrosion

1. Air conditioners should not be installed in areas where corrosive gases, such as acid gas or alkaline gas, are produced.
2. If the outdoor unit is to be installed close to the sea shore, direct exposure to the sea breeze should be avoided. If you need to install the outdoor unit close to the sea shore, contact your local distributor.

JMI-0107

Organization:
DAIKIN INDUSTRIES, LTD.
AIR CONDITIONING MANUFACTURING DIVISION

Scope of Registration:
THE DESIGN/DEVELOPMENT AND MANUFACTURE OF COMMERCIAL AIR CONDITIONING, HEATING, COOLING, REFRIGERATING EQUIPMENT, HEATING EQUIPMENT, RESIDENTIAL AIR CONDITIONING EQUIPMENT, HEAT RECLAIM VENTILATION, AIR CLEANING EQUIPMENT, COMPRESSORS AND VALVES.

JQA-1452

Organization:
DAIKIN INDUSTRIES (THAILAND) LTD.

Scope of Registration:
THE DESIGN/DEVELOPMENT AND MANUFACTURE OF AIR CONDITIONERS AND THE COMPONENTS INCLUDING COMPRESSORS USED FOR THEM

EC99J2044

All of the Daikin Group's business facilities and subsidiaries in Japan are certified under the ISO 14001 international standard for environment management.

Dealer

DAIKIN INDUSTRIES, LTD.

Head Office:
Umeda Center Bldg., 2-4-12, Nakazaki-Nishi, Kita-ku, Osaka, 530-8323 Japan

Tokyo Office:
JR Shinagawa East Bldg., 2-18-1, Konan, Minato-ku, Tokyo, 108-0075 Japan

http://www.daikin.com/global_ac/

©All rights reserved

●Specifications, designs and other content appearing in this brochure are current as of June 2011 but subject to change without notice.

SiBE041102_A
Printed in Japan 06/2011 AK. B